Library of the Marine Corps
3000229101

MARINE CORPS UNIVERSITY LIBRARY

MAGTF Warfighting Center
Library, Code C0953, MCCDC
Quantico, VA 22134-5001

U. S. MARINE CORPS

COMMAND AND CONTROL MASTER PLAN

AUGUST 1987

HEADQUARTERS, U.S. MARINE CORPS
WASHINGTON, D.C.

Research/Reference Library
Doctrine Center, MCDEC
Quantico, Va. 22134-5001

PCN 500 901900 00
DIRECTOR MARINE CORPS RESEARCH CENTER
ATTN COLLECTION MANAGEMENT (C40RCL)
MCCDC
2040 BROADWAY ST
QUANTICO VA 22134-5107

#38193367

VE
212
.U6
1989
OMEN

DEPARTMENT OF THE NAVY
HEADQUARTERS UNITED STATES MARINE CORPS
WASHINGTON, D.C. 20380-0001

IN REPLY REFER TO
CCP
2800
3 AUG 1987

From: Commandant of the Marine Corps
To: Distribution List

Subj: MARINE CORPS COMMAND AND CONTROL MASTER PLAN

Ref: (a) CMC Ltr CCP:JLW:dlg dtd 23 Mar 1983

Encl: (1) Marine Corps Command and Control Master Plan

1. Purpose. To promulgate a basic reference document describing the evolution of the Marine Corps command and control (C2) architecture from 1987 to 2001, and to provide general policy and guidance for the development, acquisition, and employment of tactical C2 systems.

2. Supersession. Reference (a) contains Marine Corps Command and Control Master Plan for the period 1983 through the mid-1990s. It is superseded by the plan promulgated as the enclosure.

3. Scope. This plan defines the Marine Corps C2 architecture and describes the communication systems, tactical data systems, and automated information systems planned to implement the architecture during the 1987-2001 time frame. It describes a general concept of employment of Marine Corps C2 systems during their evolution from the present to the year 2001. It also provides background information concerning Marine Corps C2 and related systems development and acquisition. Promulgation of this plan does not imply approval of the systems described herein. Such approval will continue to be through the Marine Corps systems acquisition review process.

4. Recommendations. Recommended changes or comments should be submitted to the Commandant of the Marine Corps (Code CCP).

R. R. PORTER
Director, Command, Control, Communications
and Computer (C4) Systems Division

DISTRUBUTION: EI

Copy to: 7000017(20)

Research/Reference Library
Doctrine Center, MCDEC
Quantico, Va. 22134-5001

COMMAND AND CONTROL MASTER PLAN

TABLE OF CONTENTS

TABLE OF CONTENTS i

EXECUTIVE SUMMARY xxix

CHAPTER I INTRODUCTION 1-1

100 PURPOSE AND SCOPE OF THE MARINE CORPS COMMAND AND CONTROL MASTER PLAN 1-1

100.1 Purpose 1-1

100.2 Scope 1-1

100.3 Organization 1-1

100.4 Terms of Reference 1-2

100.4.1 Command and Control (C2) Systems 1-2

100.4.1.1 Command and Control (C2) System 1-2

100.4.1.2 Tactical Data System (TDS) 1-3

100.4.1.3 Automated Information System (AIS) 1-3

100.4.1.4 Intelligence System 1-4

100.4.1.5 Automated Data Processing System (ADPS) 1-4

100.4.1.6 Communication System 1-4

100.4.2 Interoperability and Intraoperability 1-5

100.4.2.1 Interoperability 1-5

100.4.2.2 Intraoperability 1-5

100.5 Relationship With Other Planning Documents 1-5

100.5.1 Department of Defense (DoD) and Department of the Navy (DoN) Directives and Marine Corps Orders (MCOs) 1-5

100.5.2 Marine Corps Planning and Requirements Documents . . 1-5

100.5.3 Landing Force Manuals (LFMs) and Fleet Marine Force Manuals (FMFMs) 1-6

100.5.4 The Marine Corps Technical Interface Concepts (TIC) for Marine Tactical Systems 1-6

100.5.5 Individual System Documentation 1-6

100.6 Updating the Marine Corps Command and Control Master Plan 1-6

101 GENERAL 1-7

101.1 Background 1-7

101.1.1 MTACCS Master Plan 1-7
101.1.2 LFICS Architecture 1-7
101.1.3 Marine Corps CNI Architecture 1-8
101.1.4 C4 Systems Architecture Capstone 1-8
101.2 Systems Acquisition 1-8
101.2.1 Marine Corps Decision Authority 1-8
101.2.2 Program Executive Officers 1-8
101.2.2.1 Development Phase 1-8
101.2.2.2 Procurement Phase 1-8
101.2.3 Director, Command, Control, Communications, and Computer Systems Division 1-11
101.2.4 Acquisition Program Sponsors 1-11
101.2.5 Other Headquarters Marine Corps Staff Principals 1-11
101.2.6 Acquisition Coordinating Group 1-11
101.2.7 Marine Corps Development and Education Command . . . 1-12
101.2.8 Principal Development Activity 1-12
101.2.9 Marine Corps Operational Test and Evaluation Activity 1-12
101.2.10 Formal Program Review Bodies 1-12
102 POLICY 1-14

CHAPTER II COMMAND AND CONTROL SYSTEMS ARCHITECTURE, INTEROPERABILITY, AND CONCEPTS OF EMPLOYMENT 2-1
200 INTRODUCTION 2-1
201 COMMAND AND CONTROL SYSTEMS ARCHITECTURE 2-1
201.1 Definition 2-1
201.2 Description 2-1
202 INTEROPERABILITY 2-5
202.1 Policy 2-5
202.1.1 Department of Defense 2-5
202.1.2 Joint Chiefs of Staff 2-5
202.1.3 Marine Corps 2-5
202.2 Programs 2-5
202.2.1 Marine Corps Tactical Systems Interoperability and Intraoperability Program 2-5
202.2.2 Joint Services Programs and Agencies 2-6

202.2.2.1 Tactical Air Control Systems/Tactical Air Defense Systems (TACS/TADS) Interface Program 2-6

202.2.2.2 Joint Interoperability of Tactical Command and Control Systems (JINTACCS) Program . . . 2-7

202.2.2.3 Joint Tactical Communications (TRI-TAC) Program 2-7

202.2.2.4 Joint Tactical Command, Control, and Communications Agency (JTC3A) 2-7

202.3 Documentation 2-8

202.3.1 I2O Requirements Documents 2-8

202.3.1.1 Technical Interface Concepts for Marine Corps Tactical Systems 2-8

202.3.1.2 Required Operational Capability (ROC) Documents 2-8

202.3.2 Interoperability Standards Documentation 2-8

202.3.2.1 Technical Interface Design Plan (TIDP) for Marine Tactical Systems 2-9

202.3.2.2 Other Service, Joint, and Allied Standards . . 2-9

202.4 Implementation and Certification 2-10

202.4.1 Interoperability Implementation 2-10

202.4.2 Interoperability Verification and Certification . . 2-10

203 CONCEPT OF EMPLOYMENT 2-12

203.1 Introduction 2-12

203.1.1 Organization and Missions of Marine Air-Ground Task Forces (MAGTFs) 2-12

203.1.1.1 Organization 2-12

203.1.1.1.1 Marine Amphibious Unit 2-12

203.1.1.1.2 Marine Amphibious Brigade 2-13

203.1.1.1.3 Marine Amphibious Force 2-13

203.1.1.1.4 Composite MAGTFs and Prepositioning MABs 2-13

203.1.1.2 Missions 2-13

203.1.2 Scenario 2-13

203.1.3 Command and Control Systems 2-15

203.1.3.1 Overview 2-15

203.1.3.2 Marine Air Command and Control System (MACCS) . 2-17

203.1.3.3 Marine Air-Ground Intelligence System (MAGIS) . 2-18
203.1.3.4 Position Location Reporting System (PLRS) . . . 2-19
203.1.3.5 Marine Integrated Fire and Air Support System (MIFASS), AN/UYQ-38(V) 2-19
203.1.3.6 Tactical Combat Operations (TCO) System 2-19
203.1.3.7 Tactical Warfare Simulation, Evaluation, and Analysis System (TWSEAS) 2-20
203.1.3.8 Automated Information Systems (AISs) 2-20
203.1.3.9 Navy Command, Control, Communications, and Intelligence (C3I)/Combat Systems 2-20
203.1.3.9.1 Amphibious Command Ship, LCC 19 Class . . 2-20
203.1.3.9.2 Amphibious Assault Ship (General Purpose), LHA 1 Class 2-21
203.1.3.9.3 Amphibious Assault Ship (Multi-Purpose), LHD 1 Class 2-21
203.1.3.9.4 Amphibious Assault Ship (Helicopter) (LPH) Class 2-21
203.1.3.10 Interfaces 2-21
203.2 Amphibious Operations 2-21
203.2.1 Planning Phase 2-21
203.2.1.1 Communication Planning 2-22
203.2.1.2 Intelligence Planning 2-23
203.2.1.3 Position Location Reporting System Employment Planning 2-23
203.2.1.4 Fire Support Planning with MIFASS 2-24
203.2.1.5 Operational Planning with TCO 2-26
203.2.1.6 Aviation Planning 2-26
203.2.1.7 Planning Supported by AISs 2-26
203.2.2 Embarkation Phase 2-27
203.2.3 Movement to the Objective Area Phase 2-27
203.2.4 Rehearsal Phase 2-29
203.2.5 Assault Phase 2-30
203.3 Subsequent Operations 2-35
203.3.1 Joint and Combined Operations 2-35
203.3.2 Amphibious Withdrawals 2-36

CHAPTER III MARINE CORPS TACTICAL DATA SYSTEMS (TDSs) 3-1
300 INTRODUCTION 3-1
300.1 Marine Corps Operational Requirements 3-1
300.2 System Descriptions and Program Summaries 3-1
300.2.1 Marine Corps Tactical Command and Control Systems . 3-1
300.2.2 Marine Air-Ground Intelligence System 3-2
300.2.3 Marine Air Command and Control System 3-2
300.2.4 Other Marine Corps Tactical Data Systems 3-3
300.3 Concept of Employment 3-3
301 MARINE INTEGRATED FIRE AND AIR SUPPORT SYSTEM (MIFASS) 3-4
301.1 Requirement 3-4
301.2 Concept of Employment 3-4
301.3 System Description 3-4
301.3.1 Functions 3-5
301.3.2 Modes of Operation 3-5
301.3.3 Interoperability 3-5
301.3.4 Major Items of Equipment 3-7
301.3.4.1 Dynamic Situation Display Set (DSD), AN/USQ-89 3-7
301.3.4.2 Communications Control Panel (CCP), C-11386/UYQ-38(V) 3-7
301.3.4.3 Printers 3-7
301.3.4.4 Microcomputers (MCs) 3-7
301.3.4.5 Auxiliary Memory Devices 3-10
301.3.4.6 Digital Communications Interface Equipment (DCE), J-4150/UYQ-38(V) 3-10
301.3.4.6.1 Unit Level Message Switch (ULMS), AN/GYC-7 3-11
301.3.4.6.2 Wideband Single-Channel (WBSC) Radio 3-11
301.3.4.6.3 Unit Level Circuit Switches (ULCS), AN/TTC-42 and SB-3865 3-11
301.3.4.6.4 Digital Communications Terminal (DCT), AN/PSC-2 3-11
301.4 Acquisition Strategy 3-11
301.5 Acquisition Schedule 3-13
301.6 Personnel and Training Requirements 3-13
301.6.1 Personnel Requirements 3-13

301.6.2 Training 3-14
301.7 Documentation 3-14
302 TACTICAL COMBAT OPERATIONS (TCO) SYSTEM 3-17
302.1 Requirement 3-17
302.2 Concept of Employment 3-17
302.3 System Description 3-17
302.3.1 Functions 3-18
302.3.2 Modes of Operation 3-18
302.3.3 Interoperability 3-18
302.3.4 Major Items of Equipment 3-19
302.4 Acquisition Strategy 3-19
302.5 Acquisition Schedule 3-19
302.6 Personnel and Training Requirements 3-19
302.6.1 Personnel Requirements 3-19
302.6.2 Training 3-20
302.7 Documentation 3-20
303 POSITION LOCATION REPORTING SYSTEM (PLRS) 3-21
303.1 Requirement 3-21
303.2 Concept of Employment 3-21
303.3 System Description 3-23
303.3.1 Functions 3-23
303.3.2 Interoperability 3-24
303.3.3 Major Items of Equipment 3-25
303.4 Acquisition Strategy 3-26
303.5 Acquisition Schedule 3-28
303.6 Personnel and Training 3-28
303.7 Documentation 3-30
304 MARINE AIR COMMAND AND CONTROL SYSTEM (MACCS) 3-33
304.1 Tactical Air Operations Module (TAOM) 3-33
304.1.1 Requirement 3-33
304.1.2 Concept of Employment 3-33
304.1.3 System Description 3-33
304.1.3.1 Functions 3-34
304.1.3.2 Modes of Operation 3-34
304.1.3.3 Interoperability 3-34

304.1.3.4 Major Items of Equipment 3-38
304.1.4 Acquisition Strategy 3-40
304.1.5 Acquisition Schedule 3-40
304.1.6 Personnel and Training Requirements 3-40
304.1.6.1 Personnel 3-40
304.1.6.2 Training 3-40
304.1.7 Documentation 3-41
304.2 Advanced Tactical Air Command Central (ATACC) 3-42
304.2.1 Requirement 3-42
304.2.2 Concept of Employment 3-42
304.2.3 System Description 3-43
304.2.3.1 Functions 3-43
304.2.3.2 Interoperability 3-44
304.2.3.3 Major Items of Equipment 3-44
304.2.4 Acquisition Strategy 3-46
304.2.5 Acquisition Schedule 3-46
304.2.6 Personnel and Training 3-46
304.2.6.1 Personnel 3-46
304.2.6.2 Training 3-46
304.2.7 Documentation 3-47
304.3 Marine Remote Area Approach and Landing System (MRAALS) . 3-47
304.3.1 Requirement 3-47
304.3.2 Concept of Employment 3-47
304.3.3 System Description 3-47
304.3.3.1 Functions 3-47
304.3.3.2 Interoperability 3-47
304.3.3.3 Major Items of Equipment 3-48
304.3.4 Acquisition Strategy 3-48
304.3.5 Acquisition Schedule 3-49
304.3.6 Documentation 3-49
304.4 Marine Air Traffic Control and Landing System (MATCALS) . 3-50
304.4.1 Requirement 3-50
304.4.2 Concept of Employment 3-50
304.4.3 System Description 3-50

304.4.3.1 Functions 3-50
304.4.3.2 Interoperability 3-51
304.4.3.3 Major Items of Equipment 3-51
304.4.4 Acquisition Strategy 3-52
304.4.5 Acquisition Schedule 3-52
304.4.6 Documentation 3-53
304.5 Tactical Air Command Central, AN/TYQ-1 3-53
304.5.1 Requirement 3-53
304.5.2 Concept of Employment 3-53
304.5.3 System Description 3-53
304.5.3.1 System Functions 3-53
304.5.3.2 Interoperability 3-54
304.5.3.3 Major Items of Equipment 3-54
304.5.4 Acquisition Strategy and Schedule 3-54
304.5.5 Documentation 3-54
304.6 Tactical Air Operations Central, AN/TYQ-2 3-54
304.6.1 Requirement 3-54
304.6.2 Concept of Employment 3-54
304.6.3 System Description 3-56
304.6.3.1 System Functions 3-56
304.6.3.2 Interoperability 3-56
304.6.3.3 Major Items of Equipment 3-56
304.6.4 Acquisition Strategy and Schedule 3-56
304.6.5 Documentation 3-56
304.7 Tactical Data Communications Central, AN/TYQ-3(A) 3-56
304.7.1 Requirement 3-56
304.7.2 Concept of Employment 3-58
304.7.3 System Description 3-58
304.7.3.1 System Functions 3-58
304.7.3.2 Interoperability 3-58
304.7.3.3 Major Items of Equipment 3-58
304.7.4 Acquisition Strategy and Schedule 3-58
304.7.5 Documentation 3-58
304.8 Direct Air Support Central 3-58

304.8.1 Requirement 3-58
304.8.2 Concept of Employment 3-58
304.8.3 System Description 3-59
304.8.3.1 Functions 3-59
304.8.3.2 Interoperability 3-59
304.8.3.3 Major Items of Equipment 3-59
304.8.4 Acquisition Strategy 3-60
304.8.5 Acquisition Schedule 3-61
304.8.6 Personnel and Training 3-61
304.8.7 Documentation 3-61
304.9 Radar Bomb Directing Set (RBDS), AN/TPB-1D 3-61
304.9.1 Requirement 3-61
304.9.2 Concept of Employment 3-62
304.9.3 System Description 3-62
304.9.4 Acquisition Strategy and Schedule 3-63
304.9.5 Documentation 3-63
304.10 Radar Set, AN/TPS-63 3-63
304.10.1 Requirement 3-63
304.10.2 Concept of Employment 3-63
304.10.3 System Description 3-63
304.10.4 Acquisition Strategy and Schedule 3-64
304.10.5 Personnel and Training 3-64
304.10.6 Documentation 3-64
304.11 Radar Set, 3D, AN/TPS-59 3-64
304.11.1 Requirement 3-64
304.11.2 Concept of Employment 3-64
304.11.3 System Description 3-64
304.11.4 Acquisition Strategy and Schedule 3-65
304.11.5 Documentation 3-65
304.12 Radar Set AN/TPS-32 3-65
304.12.1 Requirement 3-65
304.12.2 Functions 3-65
304.12.3 System Description 3-65

304.12.4 Acquisition Strategy and Schedule 3-66
304.12.5 Documentation 3-66
304.13 Hawk Missile System 3-66
304.13.1 Requirement 3-66
304.13.2 Concept of Employment 3-66
304.13.3 System Description 3-67
304.13.4 Acquisition Strategy and Schedule 3-68
304.13.5 Documentation 3-68
305 MARINE AIR-GROUND INTELLIGENCE SYSTEM (MAGIS) 3-70
305.1 Requirement 3-70
305.2 Concept of Employment 3-70
305.3 System Description 3-70
305.4 Intelligence Analysis Center (IAC) 3-72
305.4.1 Concept of Employment 3-72
305.4.2 Functions 3-72
305.4.3 Interoperability 3-73
305.4.4 Major items of Equipment 3-73
305.4.5 Acquisition Strategy 3-73
305.4.6 Acquisition Schedule 3-73
305.4.7 Personnel and Training Requirements 3-73
305.4.8 Documentation 3-73
305.5 Tactical Electronic Reconnaissance Processing System (TERPES) 3-74
305.5.1 Concept of Employment 3-74
305.5.2 Functions 3-74
305.5.3 Interoperability 3-74
305.5.4 Major Items of Equipment 3-74
305.5.5 Acquisition Strategy 3-74
305.5.6 Acquisition Schedule 3-74
305.5.7 Personnel and Training Requirements 3-75
305.5.8 Documentation 3-75
305.6 Imagery Interpretation (II) Segment 3-75
305.6.1 Concept of Employment 3-75
305.6.2 Functions 3-75

305.6.3 Interoperability 3-75
305.6.4 Major Items of Equipment 3-75
305.6.5 Acquisition Strategy 3-75
305.6.6 Personnel and Training Requirements 3-75
305.6.7 Documentation 3-75
305.7 Imagery Processing Segment (IP) 3-76
305.7.1 Concept of Employment 3-76
305.7.2 Functions 3-76
305.7.3 Interoperability 3-77
305.7.4 Major Items of Equipment 3-77
305.7.5 Acquisition Strategy 3-77
305.7.6 Personnel and Training 3-77
305.7.7 Documentation 3-77
305.8 Joint-Source Imagery Processor (JSIP) 3-77
305.8.1 Concept of Employment 3-77
305.8.2 Functions 3-77
305.8.3 Interoperability 3-77
305.8.4 Major Items of Equipment 3-77
305.8.5 Acquisition Strategy 3-78
305.8.6 Acquisition Schedule 3-78
305.8.7 Personnel and Training 3-78
305.8.8 Documentation 3-78
305.9 Tactical Intelligence Management System (TIMS) 3-78
305.9.1 Concept of Employment 3-78
305.9.2 Functions 3-79
305.9.3 Interoperability 3-79
305.9.4 Major Items of Equipment 3-79
305.9.5 Acquisition Strategy 3-79
305.9.6 Acquisition Schedule 3-79
305.9.7 Personnel and Training 3-79
305.9.8 Documentation 3-79
305.10 Integrated Signals Intelligence System (ISIS) 3-79
305.10.1 Concept of Employment 3-79

305.10.2 Functions 3-80
305.10.3 Interoperability 3-80
305.10.4 Major Items of Equipment 3-80
305.10.5 Acquisition Strategy 3-80
305.10.6 Acquisition Schedule 3-80
305.10.7 Personnel and Training Requirements 3-81
305.10.8 Documentation 3-81
305.11 Other MAGIS Segments 3-82
305.11.1 Tactical Remote Sensor System (TRSS) Phase V PIP 3-82
305.11.2 Interrogator Transponder Set, AN/USQ-80 (Forward Pass) 3-82
305.11.3 Electronic Intelligence (ELINT) Support System (ESS) 3-83
305.11.4 Advanced Marine Airborne Signals Intelligence (SIGINT) System (AMASS) 3-83
305.11.5 Mobile Electronic Warfare Support System (MEWSS) . 3-84
305.11.6 Countermeasures Set, AN/ULQ-19 3-84
305.11.7 Team Portable Direction Finder (TPDF), AN/PRD-10 . 3-84
305.11.8 Sensor Monitoring Central, AN/USQ-66(V) 3-84
306 TACTICAL WARFARE SIMULATION, EVALUATION AND ANALYSIS SYSTEM (TWSEAS), AN/TSQ-T9(V) 3-86
306.1 Requirement 3-86
306.2 Concept of Employment 3-86
306.3 System Description 3-87
306.3.1 Functions 3-87
306.3.2 Interoperability 3-88
306.3.3 Major Items of Equipment 3-89
306.4 Acquisition Strategy 3-89
306.5 Acquisition Schedule 3-92
306.6 Personnel and Training 3-92
306.6.1 Personnel 3-92
306.6.2 Training 3-93
306.7 Documentation 3-93
307 BATTERY COMPUTER SYSTEM (BCS), AN/GYK-29 3-97
307.1 Requirement 3-97

307.2 Concept of Employment 3-97
307.3 System Description 3-97
307.3.1 Functions 3-97
307.3.2 Modes of Operation 3-98
307.3.3 Interoperability 3-98
307.3.4 Major Items of Equipment 3-98
307.4 Acquisition Strategy and Schedule 3-98
307.5 Personnel and Training 3-98
307.5.1 Personnel 3-98
307.5.2 Training 3-99
307.6 Documentation 3-99
308 MODULAR UNIVERSAL LASER EQUIPMENT (MULE), AN/GVS-5 3-100
308.1 Requirement 3-100
308.2 Concept of Employment 3-100
308.3 System Description 3-100
308.3.1 Major Items of Equipment 3-100
308.3.2 Interoperability 3-100
308.4 Acquisition Strategy and Schedule 3-100
308.5 Documentation 3-102
309 RADAR SET, FIREFINDER AN/TYQ-36 3-103
309.1 Requirement 3-103
309.2 Concept of Employment 3-103
309.3 System Description 3-103
309.3.1 Functions 3-103
309.3.2 Interoperability 3-103
309.3.3 Major Items of Equipment 3-103
309.4 Acquisition Strategy and Schedule 3-103
309.5 Personnel and Training 3-104
309.6 Documentation 3-104
310 METEOROLOGICAL DATA SYSTEM (MDS), AN/TMQ-31 3-105
310.1 Requirement 3-105
310.2 Concept of Employment 3-105
310.3 System Description 3-105
310.3.1 Functions 3-105
310.3.2 Interoperability 3-105

310.3.3 Major Items of Equipment 3-105
310.4 Acquisition Strategy and Schedule 3-106
310.5 Personnel and Training 3-106
310.6 Documentation 3-106
311 BACKUP COMPUTER SYSTEM (BUCS) SPECIAL 3-107
311.1 Requirement 3-107
311.2 System Description 3-107
311.3 System Capabilities 3-107
312 SMALL UNIT NAVIGATION SYSTEM (SUNS) 3-108

CHAPTER IV OTHER SERVICE, JOINT SERVICE AND NATO TACTICAL DATA SYSTEMS 4-1
400 INTRODUCTION 4-1
401 NAVY SYSTEMS 4-1
401.1 Amphibious Flagship Data System (AFDS) 4-3
401.1.1 Naval Tactical Data System (NTDS) 4-3
401.1.2 Amphibious Support Information System (ASIS) 4-4
401.2 Integrated Tactical Amphibious Warfare Data System (ITAWDS) 4-6
401.2.1 ITAWDS in LHA 1 Class Ships 4-6
401.2.2 Improved ITAWDS 4-7
401.2.2.1 Tactical Data System/Combat Direction System 4-7
401.2.2.2 Tactical Information Processing System (TIPS) 4-9
401.2.3 Radar Display Group (RDG) 4-10
401.3 Airborne Tactical Data System (ATDS) 4-10
401.4 Naval Intelligence Processing System (NIPS) 4-11
401.5 Flag Data Display System (FDDS), AN/USQ-88(V) 4-12
401.6 Closed Circuit Television (CCTV) System 4-14
401.7 Multiplexed Unit for Transmission Elimination (MUTE), AN/SSQ-82-(XN-)(V) 4-15
401.8 Systems Supporting the Ship's Signals Exploitation Space (SSES) 4-15
401.9 Shipboard MTACCS Interface Controller (SMIC) 4-15
401.10 Tactical Flag Command Center (TFCC) 4-16

402 ARMY SYSTEMS 4-17

402.1 Maneuver Control System (MCS) 4-17

402.2 All Source Analysis System (ASAS) 4-19

402.3 Tactical Fire Direction System (TACFIRE) 4-21

402.4 Advanced Field Artillery Tactical Data System (AFATDS) 4-22

402.5 Missile Minder, AN/TSQ-73 (Army Air Defense Command Post (AADCP)) 4-24

402.6 Patriot Information Coordination Central (ICC), AN/MSQ-116 4-25

402.7 Hawk Information Coordination Central (ICC) AN/MSQ-110 and Platoon Command Post (PCP), AN/MSW-13 4-25

402.8 Mobile Army Ground Imagery Interpretation Center (MAGIIC), AN/TYQ-11(V)4 4-25

402.9 Army Data Distribution System (ADDS) 4-26

403 AIR FORCE SYSTEMS 4-28

403.1 Airborne Warning and Control System (AWACS), E-3A 4-28

403.2 Control and Reporting Center (CRC)/Control and Reporting Post (CRP) Information Processing Module, AN/TSQ-91 4-30

403.3 Message Processing Center (MPC), AN/TYC-10 4-31

403.4 Enemy Situation Correlation Element (ENSCE) 4-31

403.5 Tactical Information Processing and Interpretation System (TIPI) 4-31

404 JOINT SERVICE TACTICAL DATA SYSTEMS 4-33

404.1 Worldwide Military Command and Control System (WWMCCS) 4-33

404.1.1 Description 4-33

404.1.2 WWMCCS Intercomputer Network (WIN) 4-33

404.1.3 WWMCCS Information System (WIS) 4-33

404.1.4 Marine Corps WWMCCS Information System (MARWIS) . . 4-34

404.2 Navigation System Using Timing and Ranging (NAVSTAR) Global Positioning System (GPS) 4-34

405 NATO TACTICAL DATA SYSTEMS 4-37

405.1 Wavell 4-37

405.2 Battlefield Artillery Target Engagement System (BATES) 4-37

405.3 HEROS 4-38
405.4 ADLER 4-38
405.5 SACRA 4-39
405.6 ATILA 4-39
405.7 Odin 4-39
405.8 Tactical Army Command and Control Data System (TACCDAS) 4-40
405.9 NATO Air Defense Ground Environment (NADGE) 4-40
405.10 NATO Air Command and Control System (ACCS) 4-40
405.11 German Air Defense Ground Environment(GEADGE) 4-40
405.12 NATO Command, Control, and Information System (NCCIS) 4-41

CHAPTER V MARINE CORPS COMMUNICATION ARCHITECTURE 5-1
501 INTRODUCTION
501.1 Marine Corps Communication Architecture Definition 5-1
501.2 General 5-1
501.3 Organization 5-2
502 GUIDELINES AND TECHNICAL REQUIREMENTS 5-3
502.1 Guidelines 5-3
502.1.1 Mobility 5-3
502.1.2 Transition from Analog to Digital Systems 5-3
502.1.2.1 Advantages of Digital Systems 5-3
502.1.2.2 Disadvantage of Digital Systems 5-4
502.1.3 System Interoperability 5-5
502.1.4 Communications Security 5-5
502.1.4.1 Physical Security 5-5
502.1.4.2 Emission Security 5-5
502.1.4.3 Transmission Security 5-6
502.1.4.4 Cryptographic Security 5-6
502.1.5 Graceful Degradation 5-7
502.1.6 Developmental Guidelines 5-7
502.2 Technical Requirements 5-7
502.2.1 Data Transfer 5-7
502.2.2 Record Message Traffic 5-8
502.2.3 Tactical Digital Information Links 5-8

502.2.4 Channel Rate 5-8
502.2.5 Power Sources 5-8
502.2.6 Radio Concept 5-8
503 ARCHITECTURE DESCRIPTION 5-10
503.1 Equipment Categories 5-10
503.1.1 Subscriber Facilities 5-10
503.1.1.1 Functions Performed 5-10
503.1.1.2 Current Equipment 5-12
503.1.2 Switching Facilities 5-12
503.1.2.1 Functions Performed 5-12
503.1.2.2 Current Equipment 5-13
503.1.3 Communication Control (COMMCON) Facilities 5-13
503.1.3.1 Functions Performed 5-14
503.1.3.2 Current Equipment 5-15
503.1.3.3 Future COMMCON Requirements 5-15
503.1.4 Transmission Systems 5-15
503.1.4.1 Functions Performed 5-15
503.1.4.2 Current Equipment 5-16
503.1.4.3 High Frequency Spectrum Management System . . . 5-19
503.1.5 Communications Security (COMSEC) Equipment 5-19
503.1.5.1 Families of COMSEC Equipment 5-20
503.1.5.2 Current Equipment 5-20
503.1.5.3 Systems Being Developed 5-20
504 COMMUNICATION SYSTEM SUBSCRIBERS 5-22
504.1 General 5-22
504.2 Internal 5-22
504.2.1 Operational Facilities (OPFACs) 5-22
504.2.1.1 Communication System-ADS Relationships 5-22
504.2.1.2 Supported ADSs 5-22
504.2.2 Communication Center (COMMCEN) 5-23
504.2.3 Individual Subscribers 5-23
504.3 External Interfaces 5-23
504.3.1 External Communication Systems 5-24
504.3.1.1 Naval Telecommunications System 5-24

504.3.1.2 Defense Communication System 5-24
504.3.1.3 Marine Corps Data Network (MCDN) 5-24
504.3.1.4 Other Tactical Communication Systems 5-25
504.3.2 Command and Control Systems 5-25
504.3.2.1 Worldwide Military Command and Control System (WWMCCS) 5-25
504.3.2.2 Amphibious Task Force (ATF) Command and Control Systems 5-25
504.3.2.3 Other Service Command and Control Systems . . . 5-25
505 THE MARINE CORPS COMMUNICATION ARCHITECTURE IN AMPHIBIOUS OPERATIONS 5-26
505.1 Marine Corps Communication Architecture During the Phases of an Amphibious Operation 5-26
505.2 Interoperability in the Amphibious Environment 5-26
505.2.1 Marine Corps Operational Facilities and Supporting Systems 5-26
505.2.1.1 Marine Corps Tactical Data Systems 5-26
505.2.1.2 Technical Interface Concepts 5-26
505.2.1.3 Marine Corps Operational Facilities 5-26
505.2.1.4 Shipboard Installation 5-26
505.2.2 Navy Operational Facilities and Supporting Systems . 5-27
505.2.2.1 Naval Command, Control, Communications, and Intelligence (C3I)/Combat Systems 5-27
505.2.2.2 Navy Operational Facilities 5-28
505.2.2.3 Space Availability 5-29
505.3 Communication System Concept of Employment 5-29
505.3.1 Unit Level Message Switch 5-29
505.3.1.1 Afloat 5-29
505.3.1.2 Movement Ashore 5-29
505.3.2 Multichannel Transmission Equipment 5-30
505.3.2.1 Channel Allocation 5-30
505.3.2.2 Ship-to-Shore Communications 5-30
505.3.3 Single-Channel Radio Operations 5-30
505.3.3.1 Single-Channel Radio Point-to-Point Links . . . 5-30
505.3.3.2 Single-Channel Radio Net Operations 5-31
505.3.4 Technical Considerations in the Use of Radio 5-31
505.3.4.1 Transmission Range 5-31

505.3.4.2 Use of Relays and Satellite Terminals 5-32
505.3.4.3 Frequency Management 5-32
506 COMMUNICATION ARCHITECTURE PROJECTION, 1987-1991 5-32
506.1 New Equipment 5-32
506.2 Subscriber Facilities 5-34
506.2.1 Telephones 5-34
506.2.2 Data Terminal Equipment 5-34
506.2.3 Tactical Data Systems 5-35
506.2.4 Automated Information Systems 5-35
506.2.5 Communication Centers 5-36
506.2.5.1 Tactical Communication Center (TCC) 5-36
506.2.5.2 Special Security Communication Center (SSCC) . 5-36
506.3 Switching Facilities 5-37
506.3.1 Automatic Telephone Central Office, AN/TIC-38(V) . . 5-37
506.3.2 Telephone Switchboard, SB-3614( )/TT 5-37
506.3.3 Basic Net Radio Interface Device (BNRID), C-6709/G . 5-37
506.3.4 Automatic Telephone Central Office, AN/TTC-42 . . . 5-37
506.3.5 Automatic Digital Switchboard, SB-3865(P)/TTC . . . 5-37
506.3.6 Secure Digital Net Radio Interface Unit, TSEC/KY-90 5-38
506.4 Communications Control Facilities 5-38
506.4.1 System Control Equipment 5-38
506.4.2 Communication Technical Control Center, AN/TSQ-84( ) 5-38
506.4.3 Main Distribution Frame 5-38
506.5 Transmission Systems 5-38
506.5.1 Multichannel Systems 5-38
506.5.2 Single-Channel Radios 5-39
506.5.2.1 HF Radios 5-39
506.5.2.2 VHF Radios 5-39
506.5.2.3 UHF Radios 5-39
506.5.3 Satellite Terminals 5-40
506.5.3.1 Navy UHF Fleet Satellite Communication System . 5-40
506.5.3.1.1 Satellite Communications Central, AN/TSC-96(V) Product Improvement Program (PIP) 5-40
506.5.3.1.2 Manpack Satellite Terminal, AN/PSC-3 and Vehicular Terminal, AN/VSC-7 5-40
506.5.3.2 Defense Satellite Communications System (DSCS) 5-41

506.5.3.2.1 Satellite Communications Terminal, AN/TSC-85A 5-41
506.5.3.2.2 Ground Mobile Forces Satellite Communications Terminal, AN/TSC-93A 5-41
506.5.4 Cable Systems 5-41
506.5.4.1 Fiber Optic Cable System (FOCS) 5-41
506.5.4.2 Marine Corps Fiber Optics Multiplex System (MFOMS) 5-42
506.6 System Nodal Diagrams 5-42
507 COMMUNICATION ARCHITECTURE, PROJECTION 1992-1996 5-75
507.1 New Equipment 5-75
507.2 Subscriber Facilities 5-76
507.3 Switching Facilities 5-76
507.3.1 Automatic Message Switching Set, AN/GYC-7 5-76
507.4 Tactical Communications Control Facilities (TCCFs) . . . 5-76
507.5 Transmission Systems 5-77
507.5.1 Multichannel Systems 5-77
507.5.1.1 Troposcatter Radio Set, AN/TRC-170(V)3 5-77
507.5.1.2 Radio Set, AN/MRC-139 5-77
507.5.2 Single-Channel Systems 5-77
507.5.2.1 Single-Channel Objective Tactical Terminal (SCOTT) 5-77
507.5.2.2 Joint Tactical Information Distribution System (JTIDS) 5-77
507.5.2.3 The AN/PSC-3 and AN/VSC-7 5-77
507.5.2.4 Single Channel Ground and Airborne Radio System 5-77
507.6 System Nodal Diagrams 5-78
508 COMMUNICATION ARCHITECTURE PROJECTION, 1997-2001 5-78
508.1 New Equipment 5-111
508.2 Subscriber Facilities 5-112
508.2.1 Telephones 5-112
508.2.2 Tactical Data Systems and Communication Centers . . 5-112
508.3 Switching Facilities 5-113
508.4 Tactical Communication Control Facilities 5-113
508.5 Transmission Systems 5-113
508.5.1 Multichannel Systems 5-113
508.5.1.1 Troposcatter Radio Set, AN/TRC-170(V)3 5-113

508.5.1.2 Joint Tactical Information Distribution System (JTIDS) 5-113
508.5.1.3 High Frequency Communication Terminal 5-114
508.5.2 Single-Channel Systems 5-114
508.5.2.1 AN/PRC-104 Family of Radios 5-114
508.5.2.2 VHF and UHF Radios 5-114
508.5.2.3 Satellite Communication Systems 5-114
508.5.2.4 Single-Channel Objective Tactical Terminal (SCOTT) 5-114
508.6 System Nodal Diagrams 5-114
509 OTHER SERVICE AND DEPARTMENT OF DEFENSE COMMUNICATION SYSTEMS . 5-149
509.1 Introduction 5-149
509.2 Navy UHF Satellite Communications (SATCOM) System 5-149
509.2.1 Fleet Satellite Broadcast (FSB) Subsystem 5-149
509.2.2 Common-User Digital Information Exchange Subsystem/ Naval Modular Automated Communications Subsystem (CUDIXS/NAVMACS) 5-149
509.2.3 Submarine Satellite Information Exchange Subsystem (SSIXS) 5-149
509.2.4 Officer in Tactical Command Information Exchange Subsystem (OTCIXS) 5-150
509.2.5 Secure Voice Subsystem 5-150
509.2.6 Tactical Intelligence Subsystem (TACINTEL) 5-150
509.2.7 Teletypewriter (ORESTES) Subsystem 5-150
509.2.8 Tactical Data Information Exchange Subsystem (TADIXS) 5-150
509.2.9 Demand Assigned Multiple Access (DAMA) Subsystem . . 5-150
509.2.10 Control Subsystem 5-150
509.2.11 LEASAT Telemetry, Tracking, and Command Subsystem . 5-151
509.2.12 Quality Monitoring Subsystem 5-151
509.3 U.S. Navy Super High Frequency (SHF) Satellite Communications 5-151
509.4 U.S. Navy Extremely High Frequency (EHF) Satellite Communications 5-151
509.5 Naval Modular Automated Communications System (NAVMACS), AN/SYQ-7(V)( ) 5-151
509.6 Single Audio System (SAS) 5-152
509.7 Defense Communications System (DCS) 5-152

509.7.1 Defense Switched Network (DSN) 5-152
509.7.2 Integrated AUTODIN System (IAS) 5-152
509.7.3 Defense Data Network (DDN) 5-153
509.7.4 Inter-Service/Agency Automated Message Processing Exchange (I-S/A AMPE) 5-153
509.7.5 BLACKER 5-153
509.7.6 Defense Satellite Communications System (DSCS) . . . 5-153
509.7.7 Secure Voice System (SVS) 5-153
509.8 Joint Tactical Information Distribution System (JTIDS) 5-153
509.9 Mobile Subscriber Equipment (MSE) 5-154
509.10 NATO Integrated Communications System (NICS) 5-154

CHAPTER VI MARINE CORPS AUTOMATED INFORMATION SYSTEMS (AISs) 6-1
600 INTRODUCTION 6-1
600.1 Purpose 6-1
600.2 Scope 6-1
601 AVIATION AUTOMATED INFORMATION SYSTEMS 6-2
601.1 Shipboard Uniform Automated Data Processing System - Real Time (SUADPS-RT) 6-2
601.2 Maintenance and Material Management System (3M) 6-3
601.3 Naval Aviation Logistics Command Management Information System (NALCOMIS) 6-3
601.4 Naval Flight Record Subsystem (NAVFLIRS) 6-4
601.5 Standard Naval Aviation Supply System (SNASS) 6-5
602 LOGISTICS AUTOMATED INFORMATION SYSTEMS 6-6
602.1 General 6-6
602.2 Supply 6-6
602.2.1 Supported Activities Supply System (SASSY) 6-7
602.2.2 Marine Corps Standard Supply System (M3S) 6-7
602.3 Marine Corps Integrated Maintenance Management System (MIMMS) 6-8
602.4 Standard Embarkation Management System (SEMS) 6-8
602.5 Computer-Aided Embarkation Management System (CAEMS) . . 6-10

602.6 Combat Service Support Information Network (CSSIN) 6-11

602.7 Maritime Prepositioning Ships Decision Support System (MDSS) 6-12

602.8 Marine Automated Cargo Throughput Documentation System (MACTDS) 6-13

603 MANPOWER/FISCAL AUTOMATED INFORMATION SYSTEMS 6-14

603.1 Joint Uniform Military Pay System/Manpower Management System (JUMPS/MMS) 6-14

603.2 Real-Time Finance and Manpower Management Information System (REAL FAMMIS) 6-14

604 POLICY, PLANS & OPERATIONS (PPO) SPONSORED AUTOMATED INFORMATION SYSTEMS 6-16

604.1 Unit Status and Identification Report (UNITREP) 6-16

605 JOINT INTEROPERABILITY OF TACTICAL COMMAND AND CONTROL SYSTEMS (JINTACCS) AUTOMATED MESSAGE SYSTEM (JAMS) 6-17

606 JOINT MATTERS/STRATEGIC MOBILITY BRANCH SPONSORED AUTOMATED INFORMATION SYSTEMS 6-18

606.1 Marine Air-Ground Task Force (MAGTF) Lift Requirements and Logistics Planning Factors Model . . . 6-18

606.2 Marine Air Ground Task Force (MAGTF) Lift Model II . . . 6-18

607 FLEET MARINE FORCE AUTOMATED DATA PROCESSING EQUIPMENT 6-19

607.1 Automated Data Processing Equipment for the Fleet Marine Force (ADPE-FMF) 6-19

607.2 Fleet Marine Force - End User Computing Equipment (FMF-EUCE) 6-20

607.3 Deployable Force Automated Services Center (DFASC) . . . 6-21

607.4 MAGTF Automated Services Center (MASC) 6-21

APPENDICES

A Abbreviations and Acronyms A-1

B Definitions B-1

C Systems Interface Requirements C-1

D Equipment Catalog D-1

E Communications, Navigation, Identification (CNI) E-1

F References F-1

LIST OF TABLES

1-1 System Acquisition Responsibilities 1-9

2-1 Examples of MIFASS Data Base Information 2-25

3-1 Physical Characteristics of Equipment Developed for the MIFASS Engineering Development Model 3-8

3-2 Organization of PLRS Platoon, Communication Company, Headquarters Battalion, Marine Division, FMF 3-29

3-3 PLRS Equipment Distribution 3-30

3-4 IP Segment Processing Capabilities 3-76

3-5 TWSEAS Hardware Configuration for Network Employment 3-90

3-6 Composition of TWSEAS Tactical Exercise Support Teams 3-94

3-7 Composition of TWSEAS Network Support Section 3-95

4-1 Flag Configured Amphibious Assault Shipping C2 Systems 4-2

5-1 Selected Command & Control Tactical Digital Information Links . 5-9

5-2 Communication Equipment Functions 5-11

5-3 Landing Force OPFACs exchanging Information with Navy OPFACs . 5-27

6-1 Logistics Automated Information Systems 6-6

C-1 TDSs Interface Requirements and Interface Levels C-4

C-2 TDSs Communication Interfaces C-6

C-3 Tactical Data Systems C-10

D-1 Equipment Availability D-6

D-2 Radio Frequency Chart D-9

E-1 CNI/PLI Systems E-3

E-2 JM/Terminal Allocations E-5

LIST OF FIGURES

2-1 Message Exchange Occurrence (MEO) 2-2

2-2 Information Flow Diagram 2-3

2-3 Interoperability Implementation 2-11

2-4 Phased Employment of Shipboard-MTACCS PLRS and MACTF PLRS in the Amphibious Objective Area 2-32

3-1 MIFASS/TCO Dynamic Situation Display (DSD) 3-9

3-2 PLRS Coverage Using Relays 3-23

3-3 Manpack Unit 3-27

3-4 Typical Surface Vehicle Installation 3-27

3-5 Fixed- or Rotary-Wing Aircraft Installation 3-27

3-6 Auxiliary Ground Unit 3-27

3-7 Operations Module (OM) 3-35

3-8 TAOM Major Functions and Subfunctions 3-36

3-9 TAOM External Data Link Interfaces 3-37

3-10 ATACC Data Link Interfaces 3-45

3-11 Current TACC Data Link Interfaces 3-55

3-12 Current TAOC Data Link Interfaces 3-57

3-13 MAGIS Interfaces 3-71

3-14 Typical TWSEAS Deployment 3-91

3-15 MULE w/LDRM, NFM, NS, and STTM 3-101

4-1 Army Command and Control Subordinates System 4-18

4-2 Air Force Tactical Air Control System 4-29

4-3 Marine Corps WWMCCS Connectivity 4-35

5-1 Marine Amphibious Force Headquarters Node, Present-1991 5-44

5-2 Marine Division Node Present-1991 5-46

5-3 Infantry Regiment Headquarters Node, Present-1991 5-48

5-4 Infantry/Light Armored Vehicle Battalion Headquarters Node, Present-1991 5-50

5-5 Marine Aircraft Wing Headquarters Node, Present-1991 5-52

5-6 Marine Aircraft Group Headquarters Node, Present-1991 5-54

5-7 Marine Air Control Squadron Node, Present-1991 5-56

5-8 Marine Air Support Squadron Node, Present-1991 5-58

5-9 Artillery Regimental Headquarters Node, Present-1991 5-60
5-10 Artillery Battalion Headquarters Node, Present-1991 5-62
5-11 Artillery Battery Node, Present-1991 5-64
5-12 Force Service Support Group Headquarters Node, Present-1991 . . 5-66
5-13 Combat Service Support Element Headquarters Node, Present-1991 5-68
5-14 Marine Amphibious Brigade Headquarters Node, Present-1991 . . . 5-70
5-15 Marine Amphibious Unit Headquarters Node, Present-1991 5-72
5-16 MAF Multichannel Transmission System, 1989 5-74
5-17 Marine Amphibious Force Headquarters Node, 1992-1996 5-80
5-18 Marine Division Headquarters Node, 1992-1996 5-82
5-19 Infantry Regiment Headquarters Node, 1992-1996 5-84
5-20 Infantry/Light Armored Vehicle Battalion Headquarters Node, 1992-1996 5-86
5-21 Marine Aircraft Wing Headquarters Node, 1992-1996 5-88
5-22 Marine Aircraft Group Headquarters Node, 1992-1996 5-90
5-23 Marine Air Control Squadron Node, 1992-1996 5-92
5-24 Marine Air Support Squadron Node, 1992-1996 5-94
5-25 Artillery Regimental Headquarters Node, 1992-1996 5-96
5-26 Artillery Battalion Headquarters Node, 1992-1996 5-98
5-27 Artillery Battery Node, 1992-1996 5-100
5-28 Force Service Support Group Headquarters Node, 1992-1996 . . . 5-102
5-29 Combat Service Support Element Headquarters Node, 1992-1996 . . 5-104
5-30 Marine Amphibious Brigade Headquarters Node, 1992-1996 5-106
5-31 Marine Amphibious Unit Headquarters Node, 1992-1996 5-108
5-32 MAF Multichannel Transmission System, 1995 5-110
5-33 Marine Amphibious Force Headquarters Node 1997-2001 5-116
5-34 Marine Amphibious Force Headquarters Node, Year 2001 5-118
5-35 Marine Division Headquarters Node, 1997-2001 5-120
5-36 Infantry Regiment Headquarters Node, 1997-2001 5-122
5-37 Infantry/Light Armored Vehicle Battalion Headquarters Node, 1997-2001 5-124
5-38 Marine Aircraft Wing Headquarters Node, 1997-2001 5-126

5-39 Marine Aircraft Group Headquarters Node, 1997-2001 5-128
5-40 Marine Air Control Squadron Node, 1997-2001 5-130
5-41 Marine Air Support Squadron Node, 1997-2001 5-132
5-42 Artillery Regimental Headquarters Node, 1997-2001 5-134
5-43 Artillery Battalion Headquarters Node, 1997-2001 5-136
5-44 Artillery Battery Node, 1997-2001 5-138
5-45 Force Service Support Group Headquarters Node, 1997-2001 . . . 5-140
5-46 Combat Service Support Element Headquarters Node, 1997-2001 . . 5-142
5-47 Marine Amphibious Brigade Headquarters Node, 1997-2001 5-144
5-48 Marine Amphibious Unit Headquarters Node, 1997-2001 5-146
5-49 MAF Multichannel Transmission System, 2001 5-148
5-50 Mobile Subscriber Equipment (MSE) in a U.S. Army Corps Area . . 5-155
E-1 U.S. Combat Identification Systems E-2

EXECUTIVE SUMMARY

1. Purpose. The purpose of the Marine Corps Command and Control Master Plan (C^2MP) is to provide a basic reference document describing the evolution of the Marine Corps command and control (C^2) architecture from 1987 to 2001, and to provide general policy and guidance for the development, acquisition, and employment of tactical C^2 systems.

2. Background

a. The C^2MP is a consolidation of four documents: the Marine Corps Tactical Command Control Systems (MTACCS) Master Plan; the Landing Force Integrated Communications System (LFICS) Architecture; the Marine Corps Communications, Navigation, Identification (CNI) Architecture; and the Marine Corps Command, Control, Communications, and Computer (C4) Systems Architecture Capstone. Section 101 of this plan describes these documents.

b. The first C^2MP was issued in 1983. Staffing to revise the original document began in 1985 and concluded with a final draft in March 1987. The C^2MP will be revised every third year with annual updates between the major revisions and with page/pen changes as required.

3. Scope. This plan:

a. Provides a summary of Marine Corps policy and guidance for the development, acquisition, and employment of Marine Corps C^2 systems (Chapter I). This chapter (pp. 1-10) also summarizes the responsibilities of those activities concerned with the acquisition of C^2 systems.

b. Defines the Marine Corps C^2 architecture. Chapter II defines the terms and describes the processess used by the Marine Corps to develop the C^2 architecture. The C^2 architecture provides the framework and standards required for the integration of individual systems that support the C^2 process. The architecture is described, in detail, in the Marine Corps Technical Interface Concepts (TIC) and Marine Corps Technical Interface Design Plan (TIDP). The architecture also provides a baseline for assurance of inter and intraoperability programs. Interoperability policy and programs are summarized with applicable references highlighted, facilitating further research.

c. Describes Marine Corps Tactical Data Systems (TDSs), Automated Information Systems (AISs), and other Service/allied TDSs with which we may interoperate. The distinction between TDS and AIS, while admittedly vague, is drawn along operational and administrative lines; the TDS serving primarily tactical and AIS, administrative functions. Communications systems that are integral elements of these systems are also described in these chapters (Chapters III, IV, and VI).

d. Defines the Marine Corps communication architecture as a subset of the command and control architecture, reflected in current planning (Chapter V). The architecture is described from the communicator's perspective picturing systems evolution from primarily analog to digital format in the year 2001. This chapter depicts a notional or baseline representation of systems placement within Marine Air Ground Task Force (MAGTF) nodes tailored to meet C^2 architectural requirements.

4. Issues

a. Formulating the Command and Control Master Plan is a dynamic process. As such, information contained herein is subject to change as concepts and programs change. The recent decision to terminate the MIFASS program underscores the fluid nature of such a plan. Cancellation of the project has not expunged the requirement for integrated fire and air support. Page changes to the plan will be published when a new program is initiated.

b. The desire to provide wide-spread knowledge of command and control plans requires an unclassified C^2MP. Buried in the process of defining and describing the C^2 and communications architectures are mission oriented goals and objectives based on defense guidance and threat assessments, the classification of which precludes furnishing the rational for many of the projects represented herein.

5. Conclusions

a. Paragraph 4.a. underscores the unsettled nature of the C^2 Master Plan. The accuracy and utility of such is dependent on continuous input from the reader.

b. The C^2MP offers the reader an overview of Marine Corps policy and projects intended to provide effective/efficient command and control for the MAGTF commander in support of mission requirements. As such, it is an integral part of Marine Corps strategic planning. Evolution of this document into a tracking system from mission requirement through planning and budgeting to fleet support is planned for the near term.

c. The reader should consider this document as an overview of command and control planning in the Marine Corps, the accuracy of which requires frequent input.

d. Continued effort must be made to assure a practical means of providing accurate programming information to decision makers. The C^2MP is a building block in this endeavor.

U.S. MARINE CORPS
COMMAND AND CONTROL MASTER PLAN

CHAPTER I - INTRODUCTION

100 PURPOSE AND SCOPE OF THE MARINE CORPS COMMAND AND CONTROL MASTER PLAN

100.1 Purpose. The purpose of the Marine Corps Command and Control Master Plan (C^2MP) is to provide a basic reference document describing the evolution of the Marine Corps command and control (C^2) architecture from 1987 to 2001, and to provide general policy and guidance for the development, acquisition, and employment of tactical C^2 systems.

100.2 Scope. This plan:

a. Defines the Marine Corps C^2 architecture.

b. Describes Marine Corps tactical data systems (TDSs) including those categorized as elements of the Marine Corps Tactical Command and Control Systems (MTACCS), the Marine Air Command and Control System (MACCS), and the Marine Air-Ground Intelligence system (MAGIS). It also describes Marine Corps automated information systems (AISs) and TDSs of other Services and allies with which Marine Corps TDSs may interoperate.

c. Defines the Marine Corps communication architecture and the communication systems that implement that architecture during the 1987-2001 time frame.

d. Describes the Marine Corps C^2 systems interoperability requirements in terms of their connectivity.

e. Describes a general concept of employment for Marine Corps C^2 systems during their evolution from the present to the year 2001.

f. Provides background information concerning Marine Corps C^2 and related systems development and acquisition.

100.3 Organization. This plan is divided into six chapters and five supporting appendices.

a. Chapter I defines the purpose and scope of the Marine Corps C^2MP, the organization of the plan, its relationship with other planning documents, and guidance concerning its periodic revision. Chapter I also provides a brief description of the background of the C^2MP, systems acquisition for Marine Corps C^2 systems, and responsibilities of those activities charged with system development and acquisition. A summary of Marine Corps policy and guidance for the development, acquisition, and employment of Marine Corps C^2 systems is included.

b. Chapter II defines and describes the Marine Corps C^2 systems architecture and describes a general concept of employment from the present to the year 2001. C^2 systems interoperability requirements, programs, and responsibilities are described.

c. Chapter III describes Marine Corps TDSs including those constituting the MTACCS concept. TDS requirements, functions, descriptions of major items of equipment, acquisition strategy and schedule, personnel and training implications, and system program documentation are described.

d. Chapter IV describes other Service, joint, and allied nation C^2 systems with which Marine Corps TDSs may have to interoperate.

e. Chapter V defines the Marine Corps communication architecture, describes the systems it comprises, and describes its evolution from a system that is primarily analog to a digital communication system by the year 2001.

f. Chapter VI describes AISs used by deployed Marine air-ground task forces (MAGTFs).

g. Appendix A is a glossary of abbreviations and acronyms used in the C^2MP.

h. Appendix B is a glossary of technical terms used in the C^2MP.

i. Appendix C describes Marine Corps TDS interface requirements.

j. Appendix D is a communication equipment catalogue that supports chapter V of the plan.

k. Appendix E augments chapter II with additional information concerning Marine Corps communication, navigation, and identification systems and their relationships with the Marine Corps C^2 architecture.

l. Appendix F is a list of references used in preparation of the C^2MP and that are sources of additional information on the various subjects addressed.

100.4 Terms of Reference. Appendices A and B contain glossaries of abbreviations, acronyms, and technical terms used in this plan. Because of their significance in describing concepts and systems throughout this plan, the following terms are defined here to reduce possible confusion.

100.4.1 Command and Control Systems. The term "command and control systems" and closely related terms are subject to a wide variety of definitions and interpretations. Their use in this plan is defined in the following paragraphs.

100.4.1.1 Command and Control System. In this plan, the term "C^2 system" is used in accordance with the definition contained in Joint Chiefs of Staff (JCS) Publication 1, Department of Defense Dictionary of Military and Associated Terms. A C^2 system is defined as:

"The facilities, equipment, communications, procedures, and personnel essential to a commander for planning, directing, and controlling operations of assigned forces pursuant to the missions assigned."

Accordingly, TDSs, Deployable AISs, intelligence systems, and communication systems are all elements of a C^2 system. When it is intended to single out TDSs, AISs, computers, or communication systems in this plan, the appropriate terms are used to describe the desired element. The terms "command, control, and communications (C^3);" "command, control, communications, and computers (C^4);" "command, control, communications, and intelligence (C^3I);" and "command, control, communications, computers, and intelligence (C^4I)" are used in this plan only in the title of an organization, the title of a reference, a quotation from another document, or in accordance with other Service usage when referring to that Service's systems.

100.4.1.2 Tactical Data System (TDS). The term "tactical data system" as defined in MCO 3093.1A and used in this plan is:

"An interacting assembly of procedures, system processes, and methods which include equipment specifically designed to collect, display, evaluate, and disseminate data for the purpose of supporting the command and control of military forces. The term specifically includes, but is not limited to:

a. Tactical command and control systems

b. Tactical computer systems and equipment

c. Intelligence systems

d. Sensor systems and equipment

e. Communications systems and equipments."

For the purposes of this plan and to be able to differentiate generically between TDSs and communication systems, the communication systems and equipment included in TDSs are limited to those that are unique internal communication and terminal equipment, processors, and external interface equipment that are integral elements of TDS hardware. Tactical data systems do not include AISs as defined below.

100.4.1.3 Automated Information System (AIS). The term "automated information system" is used in this plan as defined in the Technical Interface Concepts for Marine Tactical Systems (TIC).

"Formerly management information system (MIS). A collection of functional user and automated data processing people, procedures, and equipment, including automated data processing equipment (ADPE) designed, built, operated, and maintained to collect, record, process, store, retrieve, and display information essential to a commander in executing the command and management functions of planning, directing, and controlling the use of resources to accomplish missions assigned. (For purposes of this document AISs are automated and exclude tactical command and control (TC^2) systems."

AISs are those system providing support for administrative functions.

TDSs and AISs are grouped separately in this plan. However, the boundaries between the two groups are becoming indistinct. Marine Corps policy is to reduce the distinctions between TDSs and AISs. Eventually many items of hardware will be common to both groups.

100.4.1.4 Intelligence Systems. In this plan, intelligence systems are those automated systems whose functions are the processing of intelligence information into intelligence--primarily combat intelligence. They include equipment, procedures, techniques, and trained personnel required to process intelligence information into intelligence. Included are internal communication and terminal equipment, processors, and external interface equipment that are integral elements of intelligence systems hardware.

100.4.1.5 Automated Data Processing System (ADPS). The terms "automated data processing system" and "automated data system" (ADS) are used generically to include TDSs, AISs, and intelligence systems. Automated data processing system is defined in the TIC as:

"...an aggregation of required software and the support resources (ADPE, manpower, communications, services, and facilities). The ADPS includes one or more automated data systems (ADS) and generally is associated with a distinct suite of hardware. The configuration of ADPS can be: all ADSs and their supporting resources at a single activity, an ADS and its associated resources that support a single function at one or more activities, or an aggregation of types of activity with a common function and/or mission."

100.4.1.6 Communication System. In this plan, a communication system is one that provides telecommunication as defined in JCS Pub 1; i.e.:

"Any transmission, emission, or reception of signs, signals, writings, images, and sounds, or information of any nature by wire, radio, visual, or other electro-magnetic systems."

Accordingly, communication systems include the equipment, circuits, procedures, and personnel that enable a commander to exercise command and control by means of communications. Communication systems provide for the electromagnetic transfer of data and voice between individual subscribers, TDSs, AISs, and communication centers and include interfaces with systems external to a MAGTF.

100.4.2 Interoperability and Intraoperability

100.4.2.1 Interoperability

- The ability of systems, units or forces to provide services to and accept services from other systems, units or forces and to use the services so exchanged to enable them to operate effectively together. (JCS Pub.1, Jan 86)

- The condition achieved among communications-electronics systems or items of communications-electronics equipment, when information or services can be exchanged directly and satisfactorily between them and/or their users. The degree of interoperability should be defined when referring to specific cases. (JCS Pub. 1, Jan 86)

- A general term referring collectively to both interoperability and intraoperability when a distinction between the two is unnecessary. (MCO 3093.1A)

100.4.2.2 Intraoperability. Intraoperability is interoperability among Marine Corps systems. May be used when internal Marine Corps information exchange requirements are being differentiated from external or joint/combined requirements. (MCO 3093.1A)

100.5 Relationship With Other Planning Documents. Each C^2 system described in this plan has its own separate acquisition program subject to certain directives. Each program also produces its own internal program documentation. The following subparagraphs describe the relationships between this plan and these documents.

100.5.1 Department of Defense (DoD) and Department of the Navy (DoN) Directives and Marine Corps Orders (MCOs). This plan reflects the guidance obtained in DoD and DoN directives and MCOs. A listing of directives generally applicable to acquisition management of C^2 systems is contained in Appendix F. Additional references more specifically applicable to certain aspects of C^2 systems are referenced in appropriate parts of the plan. The C^2MP is subordinate to current directives, requirements documents, and system specifications.

100.5.2 Marine Corps Planning and Requirements Documents. The primary Marine Corps planning documents referenced in preparation of the C^2MP were the Marine Corps Mid-Range Objectives Plan (MMROP), and the Marine Corps Long-Range Plan. The MMROP covers the period from 1990 to 2008, and the MLRP covers the period 30 to 40 years hence. The C^2MP draws on the command and control concepts and policies contained in these plans and identifies programs that are designed to fulfill the requirements of Marine Corps Science and Technology Objective Number 250, Appendix A to the MLRP.

100.5.3 Landing Force Manuals (LFMs) and Fleet Marine Force Manuals (FMFMs). LFMs and FMFMs are the doctrinal references used to establish basic concepts of C^2 systems employment and to project their employment in the future.

100.5.4 The Marine Corps Technical Interface Concepts (TIC) for Marine Tactical Systems. The Marine Corps TIC, systems requirements documents, system specifications, and other program documentation are the source for interoperability requirements and interfaces.

100.5.5 Individual System Documentation. A wide variety of documentation governs the management of C^2 system acquisition programs. The number of documents and the degree of detail depend on variables such as when the program was initiated, which directives were in effect at the time, who is managing the program, what is the program's cost, and how complex it is. Detailed technical and descriptive documentation for individual systems and equipment should be consulted for additional detail.

100.6 Updating the Marine Corps Command and Control Master Plan. Page changes to this plan will be made as required. Major revisions will be accomplished triannually.

101 GENERAL

101.1 Background. The C^2MP is a consolidation of four documents: the Marine Corps Tactical Command Control Systems (MTACCS) Master Plan; the Landing Force Integrated Communications System (LFICS) Architecture; the Marine Corps Communications, Navigation, Identification (CNI) Architecture; and the Marine Corps Command, Control, Communications, and Computer (C^4) Systems Architecture Capstone. The first C^2MP was issued in 1983.

101.1.1 MTACCS Master Plan.

a. MTACCS is a conceptual association of TDSs to support tactical operations. Its goal is to provide FMF commanders with C^2 systems to assist in countering the postulated threat in the face of the increased tempo and complexity of the post-1980 battlefield. To attain this goal, selective automation of C^2 functions is planned wherever operationally desirable and logistically supportable.

b. The MTACCS concept originated from C^2 studies conducted during 1965 and 1966, which resulted in Marine Corps General Operational Requirement (GOR) No. CC-9, Marine Corps Tactical Command and Control Systems (MTACCS), issued in 1967. Over the ensuing years, the MTACCS concept has evolved into six systems. They are:

- Marine Integrated Fire and Air Support System (MIFASS).
- Tactical Combat Operations (TCO) System.
- Tactical Air Operations Module (TAOM).
- Marine Air-Ground Intelligence System (MAGIS).
- Position Location Reporting System (PLRS).
- Tactical War Simulation, Evaluation, and Analysis System (TWSEAS).

c. The MTACCS Master Plan was first issued in 1976. Its purpose was to provide policy and guidance for the integrated management of efforts to improve tactical C^2. The MTACCS Master Plan was last published in 1981.

101.1.2 LFICS Architecture. Originally, the MTACCS concept included a dedicated Marine Corps Tactical Command and Control (MTACC) Communication System. By 1975, it was recognized that a tactical communication network, encompassing substantially the same nodes and needlines, would be required whether or not the MTACC systems were developed and fielded. The dedicated MTACC Communication System was deleted from the MTACCS concept with the understanding that the data transfer requirement would be included in the LFICS concept. The LFICS Architecture was published from 1976 until 1983 when it was incorporated in the C^2MP. The purpose of the LFICS Architecture was to provide guidance for the development and procurement of communication systems through 1990. The title "LFICS" has been replaced by the title "Marine Corps Communication Architecture" or "Marine Corps Communication System", used as appropriate.

101.1.3 Marine Corps CNI Architecture. The CNI Architecture, published in 1980, provided an integrated, coordinated, long-term plan of action to improve CNI systems and equipment in support of the FMF. It identified candidate systems that fit into the CNI network of functions and described their specific developmental objectives.

101.1.4 Marine Corps C4 Systems Architecture Capstone. The C4 Systems Architecture Capstone, published in 1980, provided an overview of Marine Corps C^4 plans and programs to include policy governing C^4 programs, description and documentation of C^4 programs, and methodology for the integration of C^4 systems into a comprehensive architecture.

101.2 Systems Acquisition. MCO P5000.10A, Systems Acquisition Management, and MCO 5000.15, Marine Corps Systems Acquisition Management Policy, publish policy, management structure, and responsibilities for the acquisition of material systems and equipment within the Marine Corps. Marine Corps Headquarters Order (HQO) P5400.18, Headquarters Marine Corps Organization Manual (HQMCORGMAN), describes the organization and responsibilities of the Headquarters, Marine Corps Staff. The following paragraphs summarize the responsibilities of those activities concerned with the acquisition of C^2 systems. Table 1.1 summarizes these responsibilities for selected individual C^2 systems and categories of systems.

101.2.1 Marine Corps Decision Authority. The Deputy Chiefs of Staff for Research, Development, and Studies and for Installations and Logistics are designated as Marine Corps Decision Authorities.

101.2.2 Program Executive Officers. Program executive officers (PEOs) are designated for the development and procurement phases of the system acquisition process.

101.2.2.1 Development Phase. The Deputy Chief of Staff for Research, Development, and Studies (DC/S, RD&S) functions as the PEO from program initiation to production (Milestone III) and for product improvement of fielded systems when research and development effort is required. The DC/S, RD&S has staff responsibility for directing, coordinating, and supervising staff activities in research, development, test, and evaluation (RDT&E) and for initiating and coordinating policies and programs affecting the Marine Corps system acquisition process.

101.2.2.2 Procurement Phase. The Deputy Chief of Staff for Installations and Logistics (DC/S, I&L) becomes the PEO for programs after Milestone III, and retains that role throughout the life cycle of the systems. He is also responsible for initiating and coordinating integrated logistic support (ILS) planning during the development phase of the acquisition cycle and for the implementation of that plan.

Table 1-1. System Acquisition Responsibilities

SYSTEM	ACQUISITION PROGRAM SPONSOR (APS) HQMC	ACQUISITION SPONSOR PROJECT OFFICER (CMC CODE)	ACQUISITION PROJECT OFFICER (CMC CODE)	DEVELOPMENT COORDINATOR (CMC CODE)	DEVELOPMENT PROJECT OFFICER (DEV CEN, MCDEC)	PRINCIPAL DEVELOPMENT ACTIVITY
Tactical Air Operations Module (TAOM)	DC/S Aviation	APC	LMC	RDD	C^3 Division	SPAWAR (PD-70)
Battery Computer System (BCS)	DC/S Plans, Programs & Operations	POG	LMW	RDD	C^3 Division	PM FATDS (Army)
MAGIS Intelligence Analysis Center (IAC)	Director Intelligence	INTM	LMC	RDD	Intel Division	ESD HAFB (Air Force)
MAGIS Integrated Signals Intelligence System (ISIS)	Director Intelligence	INTS	LMC	RDD	Intel Division	SPAWAR (PMW 144-4)
Automated Data Processing for the FMF (ADPE-FMF)	Director, C^4 Systems Division	CCI	LMC	RDD	C^3 Division	None (Off the Shelf)
MAGTF Automated Services Center (MASC)	Director, C^4 Systems Division	CCI	CCI	RDD	C^3 Division	None (Off the Shelf)
Marine Integrated Fire and Air Support System (MIFASS)	Director, C^4 Systems Division	CCA	LMC	RDD	C^3 Division	SPAWAR (PD-70)
Tactical Combat Operations (TCO) System	Director, C^4 Systems Division	CCA	LMC	RDD	C^3 Division	SPAWAR (PD-70)
Position Location Reporting System (PLRS)	Director, C^4 Systems Division	CCA	LMC	RDD	C^3 Division	SPAWAR (PD-70)
Communication Systems/ Equipment (Comm)	Director, C^4 Systems Division	CCT	LMC	RDD	C^3 Division	SPAWAR (PD-70)
Communications Security (COMSEC) Systems	Director, C^4 Systems Division	CCT	LMC	RDD	C^3 Division	National Security Agency et al

Table 1-1. System Acquisition Responsibilities--Continued

SYSTEM	ACQUISITION PROGRAM SPONSOR (APS) HQMC	ACQUISITION SPONSOR PROJECT OFFICER (CMC CODE)	ACQUISITION PROJECT OFFICER (CMC CODE)	DEVELOPMENT COORDINATOR (CMC CODE)	DEVELOPMENT PROJECT OFFICER (DEV CEN, MCDEC)	PRINCIPAL DEVELOPMENT ACTIVITY
Advanced Tactical Air Command Central (ATACC)	DC/S Aviation	APC	LMC	RDD	C^3 Division	SPAWAR (PD-70)
Improved Direct Air Support Central (IDASC)	DC/S Aviation	APC	LMC	RDD	C^3 Division	SPAWAR (PD-70)
Marine Remote Area Approach and Landing System (MRAALS)	DC/S Aviation	APC	APC	RDD	C^3 Division	SPAWAR (PD-70) & NAVAIR (AIR-543 K)
Marine Air Traffic Control and Landing System(MATCALS)	DC/S Aviation	APC	APC	RDD	C^3 Division	SPAWAR (PD-70-130)
Battery Command Post	DC/S Aviation	APC	LMC	RDD	Firepower Division	MICOM (ARMY)
All Source Imagery Processor (ASIP)	Director Intelligence	INTM	LMC	RDD	INTEL Division	ESD HAFB (Air Force)
Tactical Intelligence Management System (TIMS)	Director Intelligence	INTM	LMC	RDD	INTEL Division	Naval Surface Weapons Center
Tactical Warfare Simulation, Evaluation, and Analysis System (TWSEAS)	DC/S Training	TAP	LMC	RDD	C^3 Division	Naval Training Systems Center (NTSC)

101.2.3 Director, Command, Control, Communications, and Computer Systems Division. The Director, C^4 Systems Division, is the focal point at HQMC for staff activities concerning C^4 systems. He provides for the planning, directing, and coordinating of staff activities on matters relating to command and control systems, telecommunications, and automated data systems; and advises the Commandant on Joint Chiefs of Staff matters related to these activities. Staff cognizance and acquisition sponsorship of aviation and intelligence command and control systems remains with the Deputy Chief of Staff, Aviation, and the Director of Intelligence.

101.2.4 Acquisition Program Sponsors. An acquisition program sponsor (APS) is a DC/S or director of a major HQMC staff department or division who has primary responsibility for ensuring the achievement of an operational capability for a given material system, function, or task. The APS is responsible for the overall planning, coordination, and direction of assigned acquisition programs. He is supported by various staff principals within HQMC, the Marine Corps Development and Education Command (MCDEC), the Marine Corps Operational Test and Evaluation Activity (MCOTEA), and system principal development activities (PDAs). The APS is responsible for establishing an acquisition coordinating group (ACG) for each acquisition program, and acts as its decision authority in all matters affecting the program.

101.2.5 Other Headquarters Marine Corps Staff Principals. The APS is supported by other HQMC staff principals in their areas of responsibility; e.g., I&L, in the areas of integrated logistic support and procurement; DC/S, Manpower, in the area of manpower requirements; and DC/S, Training, in the area of training requirements. The details of planning and support by the various staff principals are accomplished primarily by representatives assigned to the ACG.

101.2.6 Acquisition Coordinating Group. An ACG is established for each acquisition program. Representatives of the interested staff principals meet informally to facilitate the exchange of information and to coordinate matters affecting the progress of a system in each phase of the acquisition process. The ACG recommends guidance and policy for planning, coordination, and direction of the program. An ACG is composed of:

- Acquisition sponsor project officer (ASPO) assigned by the APS. The ASPO serves as chairman of the ACG.
- Acquisition project officer (APO) assigned by the DC/S, I&L, HQMC.
- Development coordinator (DC) assigned by the DC/S, RD&S, HQMC.
- Manpower point of contact (MPOC) assigned by the DC/S, Manpower, HQMC.
- Training review officer (TRO) assigned by the DC/S, Training, HQMC.
- Development project officer (DPO) assigned by the CG, MCDEC (Director, Development Center).

Representatives of other interested activities, such as the MCOTEA operational test project officer (OTPO), Marine Corps Tactical Systems Support Activity (MCTSSA) project team leader (PTL), and the PDA's acquisition manager may participate in ACG meetings as required.

101.2.7 Marine Corps Development and Education Command. The CG, MCDEC, is responsible for the field coordination and execution of Marine Corps RDT&E activity to support the acquisition of new systems, less those operational test and evaluation (OT&E) responsibilities assigned to MCOTEA and to the Fleet Marine Force (FMF) commanders. The Director, Development Center, as the representative of CG, MCDEC, is responsible for the day-to-day management of MCDEC RDT&E activity.

101.2.8 Principal Development Activity. At the request of the Commandant of the Marine Corps (CMC), the head of another Service or agency acquisition activity will act as, or assign, a PDA to undertake designated technical and contractual management responsibilities for system development. In general, this responsibility includes preparing development proposals (DPs) in response to required operational capability (ROC) documents, preparing estimates for program acquisition costs, and allocating resources within the approved plan, as directed by CMC.

101.2.9 Marine Corps Operational Test and Evaluation Activity. MCOTEA supports the material acquisition process by managing the Marine Corps operational test (OT) program. MCOTEA's functions include planning and managing all OT&E, conducting OT of all major systems and designated nonmajor systems, and performing such functions as may be directed by CMC. The Director, MCOTEA, coordinates with CG, MCDEC, on the use of approved threat projections, scenarios, doctrine, training programs, and organizational structure in the OT program. An OTPO is designated for each system at the time of program initiation. Close contact and coordination are maintained with each ACG on system life-cycle management matters and in the preparation of OT plans. An independent evaluation of operational testing is submitted by MCOTEA directly to CMC and the appropriate review council, or committee. Specific functions of, and the concept of operations for, MCOTEA are contained in MCO 3960.2, Marine Corps Operational Test and Evaluation Activity (MCOTEA), Establishment of; and MCO 5000.11A, Testing and Evaluation of Systems and Equipment for the Marine Corps.

101.2.10 Formal Program Review Bodies. Marine Corps acquisition programs that are to be formally reviewed fall into two categories: (1) major programs that are reviewed by the Marine Corps Program Decision Meeting (MCPDM), formerly the Marine Corps Systems Acquisition Review Council (MSARC); and (2) less-than-major programs that are reviewd by the In-Progress Review Committee (IPRC). Other Service, joint, or agency programs in which the Marine Corps participates, but is not the lead Service, are reviewed by the MCPDM or IPRC, and by the other Service, agency, or department, as appropriate.

a. The MCPDM is a board of general officers chaired by the Assistant Commandant of the Marine Corps, and consists of the Deputy Chiefs of Staff, the Fiscal Director of the Marine Corps, and the CG, MCDEC. It also includes the Director, C^4 Systems Division, the Director of Intelligence, and the

legislative Assistant to the Commandant. The MCPDM provides recommendations and supporting rationale concerning the acquisition program under review, in the form of an acquisition decision memorandum (ADM), to the CMC for approval.

b. The IPRC is chaired by the DC/S, RD&S, and consists of representatives of the same members that constitute the MCPDM. The IPRC provides recommendations and supporting rationale concerning the acquisition program under review in the form of an ADM to the Assistant Commandant of the Marine Corps for approval.

102 POLICY

The following policies are applicable to all C^2 systems acquisition programs.

a. The objective of Marine Corps C^2 systems programs is to provide FMF commanders with command and control means to cope with the tempo and complexity of the future battlefield. This envisions, where tactically desirable and logistically supportable, the use of integrated systems that can automatically receive, process, display, and distribute information rapidly, accurately, and in sufficient quantity.

b. The satisfaction of operational requirements shall be the primary consideration in providing automated systems to the FMF.

c. Systems developed for the FMF shall be operable in both combat and garrison. Specifically designated systems shall also be operable aboard amphibious ships.

d. Marine Corps requirements for new acquisitions shall be satisfied, whenever suitable and acceptable, through the programs of other Services, Government agencies, or joint development efforts. Exceptions to this policy shall be authorized solely by CMC.

e. When existing, proven technology will satisfy a requirement, it shall be used. Standard Marine Corps equipment and other off-the-shelf components shall be used unless specific justification to do otherwise is provided.

f. Standard hardware and software shall be used to the maximum, practical extent. The extent of their use shall be a review item during each MCPDM or IPRC proceeding.

g. Training and proficiency in the use of manual backup systems and procedures shall be mandatory.

h. System complexity and sophistication shall be kept to a minimum consistent with providing the required operational capability.

i. Maximum integration of ground and aviation systems shall be required to enhance the combat power of the Marine air-ground team.

j. Marine Corps TDS and equipment program sponsors shall be responsible for identifying interfaces, or changes thereto, necessary to achieve required levels of interoperability/intraoperability. Funding to support the development of interfaces, or changes thereto, is the responsibility of each system sponsor.

k. TDSs and interconnecting equipment to be used by the Marine Corps shall undergo interoperability testing required for interoperability certification in accordance with the Marine Corps Interoperability Management Plan (IMP).

l. Marine Corps and joint data exchange standards shall be stated in appropriate requirements documents and TDS and equipment specifications. They shall be incorporated into systems and equipment during their design.

m. ROC documents, system specifications, the Marine Corps TIC, and the Technical Interface Design Plan (TIDP) for Marine Tactical Systems shall identify interoperability/intraoperability requirements to the appropriate degree of detail for the documentation. Interoperability with the systems of other Services and allied nations shall also be identified.

n. Interface design standards developed by the Joint Tactical Command, Control, and Communications Agency (JTC^3A) (including the Joint Tactical Air Operations (JTAO) program and the Tactical Digital Information Link J (TADIL J)) shall be the basis for tactical data systems interoperability developments.

o. Software shall be written in a DoD-approved high order language (HOL), as specified in DoD Instruction 5000.31.

p. Classified and unclassified material contained in TDSs and supporting equipment shall be safeguarded by the employment of protective features in system hardware/software design and configuration and by other appropriate administrative, physical, personnel, and communications security controls.

q. Systems shall be characterized by modularity to facilitate interoperability.

r. System capabilities shall provide for continuity of operations in degraded conditions. Systems must be designed with the reliability, redundancy, maintainability, and reconfiguration capability, to provide a high degree of system availability and to permit control functions to degrade gracefully--not catastrophically--in the event of equipment loss resulting from malfunction or enemy action.

s. System sponsors, in coordination with the Director C^4 Systems Division, shall ensure that suitable provisions are made to meet system communication requirements. The communication system shall provide the required telecommunications for the transfer of information in digital or analog form as required. It shall also provide the links for communications into the Defense Communications System (DCS). Tactical satellite terminals, when directed or required, shall enter the DCS directly via DCS contingency stations (Rack 20). North Atlantic Treaty Organization (NATO) and joint task force (JTF) requirements will be met on a case-by-case basis.

t. The Marine Corps tactical multichannel communication system shall transition to a common user, secure, digital communication system over the next 15 years.

u. The effects of electronic warfare (EW) shall be considered when acquiring tactical communication equipment. Systems shall be capable of operating in a high electronic countermeasure (ECM) threat environment.

v. The effects of electromagnetic pulse (EMP) shall be considered when acquiring C^2. Systems shall be capable of operating in a nuclear environment.

w. Marine Corps integrated logistics support efforts shall be conducted as an integral part of the acquisition process, including concept formulation. ILS planning shall be pursued to ensure realistic application of ILS considerations as principal design parameters, along with cost, technical excellence, and simplicity in operation and maintenance.

x. ILS programs shall place special emphasis on improving reliability and maintainability to reduce personnel and high-level skill requirements in the operation and maintenance of C^2 systems.

y. Marine Corps TDSs and AISs shall be developed under a single automated data processing (ADP) concept that:

(1) Reduces distinctions between FMF and supporting establishment AISs.

(2) Makes FMF and supporting establishment AISs subsets of Marine Corps-wide AISs.

(3) Reduces distinctions between AISs and TDSs.

z. C^2 equipment shall be interoperable with Marine Corps AISs to satisfy the information requirements of higher headquarters.

aa. The Automated Data Processing Equipment for the FMF (ADPE-FMF) concept shall remain valid throughout the mid-range period.

bb. Marine Corps major programs (MCPDM level) shall be subject to configuration management (CM) beginning at the time the functional baseline is established, and continuing throughout the life cycle of the configuration item.

cc. Requirements for operator and support personnel and for personnel of higher mental groups shall be identified and provided for as early as possible in the development process, but not later than MCPDM III.

dd. Costs and time required for military occupational specialty (MOS) training, including student man-year requirements and the ability of existing schools to conduct the required training, shall be identified and refined for each MCPDM review and resolved not later than Milestone III, the production-deployment decision. Requirements shall be expresed in terms of numbers; by grade, skill level, and force structure.

ee. C^2 system specifications shall require that the equipment be designed to operate in any area of the world to which the FMF may be deployed. Equipment shall be transportable by air, rail, landing craft, helicopter, truck, and ship, and must not impede the mobility of the operational forces. All equipment used by the infantry battalion shall be man-portable.

ff. Every effort shall be made during development to prevent any increase in amphibious assault shipping requirements. The impact of the system on amphibious assault shipping requirements shall be identified and refined to reflect the best current estimate for each MCPDM review.

gg. Systems shall be designed to operate using electrical power provided by ship, commercial sources, batteries, and standard Marine Corps field power-generating equipment projected for the 1987-2001 time frame, as appropriate.

hh. It is desirable for all equipment to be capable of operating under field conditions without the requirement for environmentally-controlled shelters. When shelters are required, the equipment to be sheltered shall be designed so that it can be installed in standard Marine Corps shelters.

ii. National policy requires all military transmissions be secured. To meet this policy, communications security (COMSEC) requirements must be identified early in the development phase of C^2 systems. These identified requirements will be included in the Department of the Navy budget. The present COMSEC goal is to embed, when practical, the function of communications security within the end-item piece of equipment.

CHAPTER II

COMMAND AND CONTROL SYSTEMS ARCHITECTURE, INTEROPERABILITY, AND CONCEPTS OF EMPLOYMENT

200 INTRODUCTION

Section 201 examines the general concept of a command and control (C^2) architecture by defining key terms and describing its fundamental structure. Section 202 briefly describes the interoperability and intraoperability requirements of a Marine Corps C^2 architecture and the programs directed toward meeting those requirements. Section 203 briefly describes Marine Corps C^2 systems and general concepts of their employment from the present to the year 2001.

201 COMMAND AND CONTROL SYSTEMS ARCHITECTURE

201.1 Definition. An architecture is an aggregate or set of elements systematically associated and structured to accomplish a purpose and is characterized by the unique organization of its elements. A command and control architecture is a set of associated command and control elements (C^2Es) arranged in a command structure and communication network to enable a commander to plan, direct, coordinate, and control the operations of his forces.

Each C^2E includes the essential equipment, communications, personnel, and procedures to perform its functions. C^2Es are divided into two subsets: operational facilities (OPFACs) and action elements (AEs). OPFACs are those organizational elements specifically tasked to plan, direct, coordinate, and control tactical operations. AEs are the lowest level combat units or elements required to carry out tasks assigned by OPFACs. Examples of OPFACs include fire direction centers (FDCs), forward observers (FOs), direct air support centers (DASCs), and flight leaders. Examples of AEs include an aircraft, a helicopter, an artillery battery, a mortar platoon, and a rifle platoon.

201.2 Description. A rapidly expanding technology has made possible the development of powerful, sophisticated C^2 systems. The objective of the C^2 architecture is to provide the framework and standards required for the integration of individual systems into the network of C^2 systems with the interoperability required for Marine Corps, joint, and combined operations. The Marine Corps C^2 architecture into which C^2 systems must be integrated is described in detail in the Marine Corps Technical Interface Concepts (TIC) and the Marine Corps Technical Interface Design Plan (TIDP). The TIC and TIDP are undergoing major revision. References to them in this section are based on the planned content of the revisions as described in section 202.3 of this chapter. A synopsis of the architectural framework is provided in this section.

As elements of a command and control network, C^2Es have an inherent requirement to exchange information, required for the accomplishment of their functions or tasks, with other C^2Es. Broken down into its most fundamental elements, a C^2 architecture can be described as a set of C^2Es exchanging

information, the communication links connecting the C^2Es, and the information exchanged. This association of four essential components defining information transfer requirements, or message exchange occurrences (MEOs), also define communication needlines. An MEO summarizes this relationship and is graphically portrayed in figure 2-1.

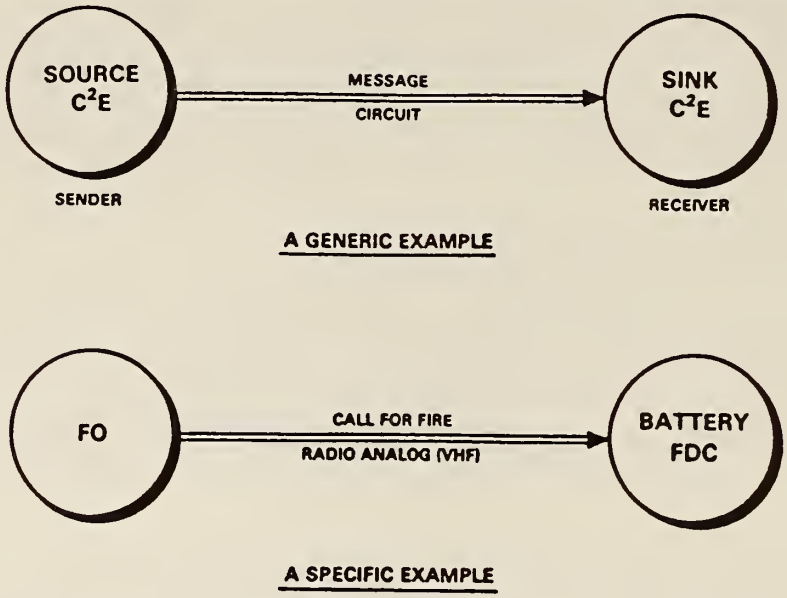

Figure 2-1. Message Exchange Occurrence (MEO)

The figure portrays a sender of information (an originating C^2E), the recipient of the information (a receiving C^2E), the link between them (the means of communication or circuit), and the message that transports the information. If any component of the MEO changes, a new MEO is generated. This is true whether the change is a change of C^2Es, a change in the link, or a change in the type of message transmitted. An MEO is a unique occurrence of an information transfer. It is a singular relationship describing a discrete association of the elements of which the MEO is composed. When the existence of an individual MEO at some point in time is verified, the potential to exchange information between the C^2Es is validated and the fact that interoperability between the C^2Es must exist is established. In other words, an MEO specifies a unit of interoperability. Validated, but unordered MEOs constitute the set of all possible occurrences of message exchanges and describe the architecture as it exists in a potential state.

When MEOs are collected into ordered sets, they constitute C^2 flow diagrams describing C^2E interactions as a sequence of causal and resultant events and describe a specific model of the architecture. A model of the architecture that consists of a chain of validated, ordered MEOs necessarily reflects the compatibility and interoperability inherent in the MEOs that created it. Figure 2-2 depicts such a collection.

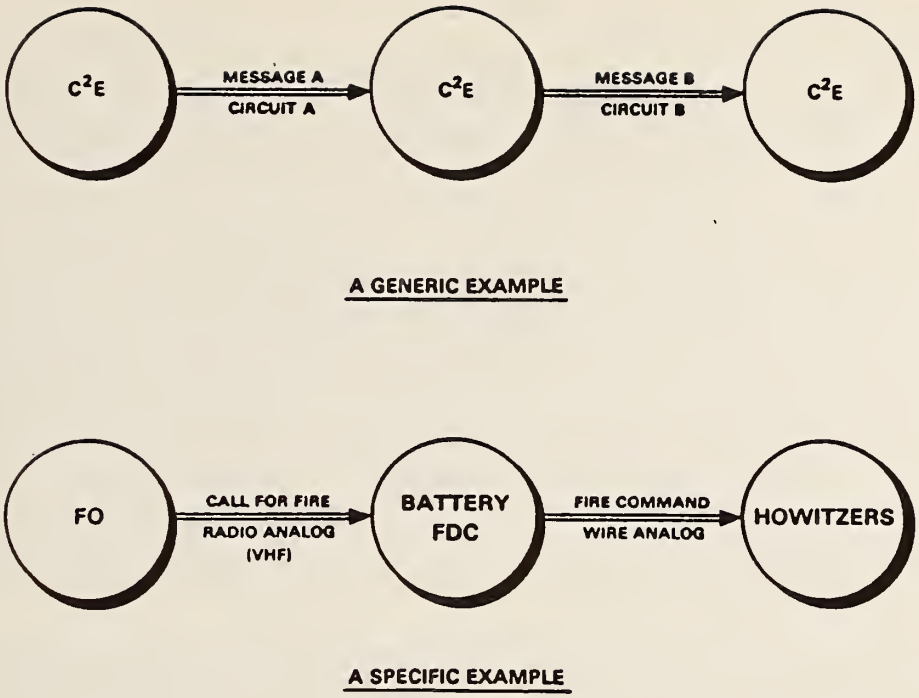

Figure 2-2. Information Flow Diagram

Validated MEOs are the basic building blocks of an architecture and their derivation is the process by which a valid architecture can be constructed on a sound doctrinal base. Basic data required for the derivation of MEOs are:

- C^2Es.
- C^2E functions and tasks.
- Message elements/information to be exchanged.
- Message standards/approved standard message formats.
- Communication equipment, automated data systems, and their characteristics.
- Protocol standards.

C^2Es are derived from doctrinal publications and studies for both present and proposed future requirements. A consolidated listing of C^2Es is contained in the TIC. C^2Es can be defined in varying levels of specificity. For example:

- By function--a combat operations center (COC).
- By function, type, and echelon of its parent organization--an infantry battalion COC.

- By function and organizational designation--the COC of the 1st Battalion, 1st Marines.

C^2E functions and tasks are also determined from the same doctrinal publications, requirements studies, and required operational capability (ROC) documents. They are listed by C^2E in the TIC. The analysis of C^2E functions and tasks yields the next element of required data: the elements of messages used for information exchange. These message elements are grouped into messages formatted in accordance with approved message standards. Message elements and standards are contained in Volumes III and IV of the TIDP.

The characteristics of the automated data systems and communication equipment at each C^2E, together with such tactical considerations as distance the information must be transmitted and security requirements, determine the nature of the mode or circuit over which the information can be transmitted. The technical specifications characterizing the signal interfaces between C^2Es are documented in protocol standards and are contained in volumes V and VI of the TIDP. Characteristics of ADSs and communication equipment are contained in this plan, Marine Corps TM-2000-15/2, and systems and equipment documentation.

Inherent in the analysis of data required to derive MEOs and develop an architecture is the identification of interoperability and intraoperability requirements for implementing the resulting C^2 architecture. C^2 flow diagrams in the form of multiple agency message exchange sequences are contained in volume II of the TIDP.

202 INTEROPERABILITY

Interoperability is the ability of systems, units, or forces to exchange information effectively. An effective exchange occurs when the necessary information is delivered within the time interval required.

202.1 Policy

202.1.1 Department of Defense. DoD Directive 4630.5 of 9 October 1985, Compatibility and Interoperability of Tactical Command, Control, Communications, and Intelligence Systems, states it is DoD policy "...to develop, acquire, and deploy tactical C^3I systems and equipment that effectively meet the essential operational needs of the U.S. tactical forces, and that are compatible and interoperable where required with other U.S. tactical C^3I systems and equipment, with Allied tactical C^3I systems and equipment, and with U.S. non-tactical C^3I systems and equipment....The degree of necessary interoperability shall be determined during the requirements validation process and shall be ensured through the acquisition process, deployment, and operational life of the system or equipment."

202.1.2 Joint Chiefs of Staff. Joint Chiefs of Staff (JCS) Memorandum of Policy (MOP) No. 160 of 7 January 1986, Compatibility and Interoperability of Tactical Command, Control, Communications, and Intelligence Systems, implements DoD Directive 4630.5. MOP 160 states it is JCS policy "...that the military forces of the United States must possess the compatibility and interoperability necessary to ensure success in joint and combined operations.... Compatibility and interoperability of tactical C^3I systems are critical elements in achieving that goal."

202.1.3 Marine Corps. Marine Corps Order 3093.1A, Intraoperability and Interoperability of Marine Corps Tactical Data Systems (TDSs) and Interconnecting Equipment, established Marine Corps policy to ensure that only approved Marine Corps or joint interoperability standards are implemented in Marine Corps C^2 systems. Implementation of Marine Corps intraoperability and joint interoperability standards is accomplished in the Marine Corps through the Tactical Systems Interoperability and Intraoperability Program (TACSIIP).

202.2 Programs

202.2.1 Marine Corps Tactical Systems Interoperability and Intraoperability Program. The objective of TACSIIP is to ensure C^2 architectural integrity through system interoperability definition, and publication, maintenance, and enforcement of interoperability requirements, standards, and interface specifications. TACSIIP also provides unified management for Marine Corps participation in joint interoperability programs. The program is sponsored by the Director, C^4 Systems Division, Headquarters, Marine Corps and is executed by the Commanding General, Marine Corps Development and Education Command (CG, MCDEC).

TACSIIP tasking includes but is not limited to:

a. Developing and maintaining a Marine Corps Interoperability Management Plan (IMP).

b. Developing and maintaining interoperability requirements stated in the Technical Interface Concepts.

c. Developing and maintaining the Marine Corps Interoperability Data Base (IDB).

d. Operating the Interoperability Configuration Control Board (ICCB) under the guidelines of MCO 3093.1A and the Marine Corps Interoperability Configuration Management Plan.

e. Providing Marine Corps representation to joint and allied working level interoperability standards configuration management groups.

f. Providing technical support to Marine Corps representatives of joint and allied interoperability configuration control boards.

g. Developing and maintaining Marine Corps intraoperability standards to include publication in the Technical Interface Design Plan for Marine Tactical Systems.

h. Developing, maintaining and implementing certification procedures to ensure compliance with interoperability requirements and standards.

i. Analyzing interoperability issues resulting from technology and increased levels of Marine Corps automation.

j. Reviewing individual tactical data system interface documents to ensure Marine Corps and/or joint interoperability standards are specified, achieved, and managed in TDSs.

k. In coordination with system Development Project Officers (DPOs) and Deputy Chief of Staff for Installations and Logistics, Director Material Division (CMC (LM)), monitoring the configuration control of TDSs during development and after fielding.

l. Verifying that joint interoperability considerations are appropriately reflected in developing Marine Corps systems.

202.2.2 Joint Services Programs and Agencies. Principal joint Services programs and joint agencies providing interoperability guidance are described in the following paragraphs.

202.2.2.1 Tactical Air Control Systems/Tactical Air Defense Systems (TACS/TADS) Interface Program. The TACS/TADS interface program was initiated in 1969 as a multi-Service and Agency program to achieve compatibility and interoperability (C&I) of existing deployable air control and air defense systems that supported tactical air operations. The interface was accomplished through the use of tactical digital information links (TADILs) A and B. The

TACS/TADS interface was successfully demonstrated in 1977, with a final report submitted to the JCS in March 1978. In 1981, the title of TACS/TADS was changed to the Joint Tactical Air Operations (JTAO) Interface Program. In January 1983, the responsibility for JTAO configuration management testing was assumed by the Joint Interoperability of Tactical Command and Control Systems (JINTACCS) Program. Responsibility now rests with the Joint Tactical Command, Control, and Communications Agency (JTC^3A) Joint Interface Test Force (JITF). The JCS approves changes to the JTAO standards.

202.2.2.2 Joint Interoperability of Tactical Command and Control Systems (JINTACCS) Program. In 1971, the JCS established the Joint Interoperability Program for Tactical Command and Control Systems in Support of Ground and Amphibious Military Operations (GAMO program). The GAMO program was to provide an effective means of exchanging combat information for those operational tasks that were not already addressed by the TACS/TADS (JTAO) standards. In 1977, the GAMO program executive agent was instructed to assume responsibility for configuration management of the JTAO program and the title GAMO was changed to JINTACCS to accommodate the program's expanding roles. In 1977, the JINTACCS Program was also assigned the responsibility to develop TADIL J for use with the Joint Tactical Information Distribution System (JTIDS). All of the major message text format (MTF)(previously called character-oriented message (COM)) and TADIL procedural interface standards development activities are now under the cognizance of the JINTACCS Program. In July 1984, the JTC^3A was established and assigned responsibility for managing the JINTACCS and Joint Tactical Communications (TRI-TAC) Programs. Since that time, TRI-TAC equipment program management has been assigned to the lead Services. Some TRI-TAC interface and management documents are still subject to joint configuration management in accordance with procedures established by the JTC^3A.

202.2.2.3 Joint Tactical Communications (TRI-TAC) Program. The Joint Tactical Communications Office (JTCO) was established in 1971 to serve as the architect and principal planner for tactical, multichannel, switched, communications systems (TRI-TAC Program). This included all trunking, accessing, and switching equipment for mobile and transportable tactical multichannel systems, including associated systems control and technical control facilities; data terminal equipment, voice, teletypewriter, data, and ancillary terminal devices; as well as associated communications security (COMSEC) equipment. It also included mobile and transportable, tactical, single-channel switched systems (the mobile subscriber access system), which could be operated as an independent system or as part of a tactical multichannel system. Finally, it included all interface devices for connecting TRI-TAC equipment to existing military systems, the Defense Communication System (DCS), and North Atlantic Treaty Organization (NATO) facilities. The JTCO and its TRI-TAC Programs have been incorporated into the JTC^3A along with the JINTACCS Program. TRI-TAC equipment programs are managed by assigned lead Services. Not all communication system equipment is being developed under the aegis of the TRI-TAC Program, nor is it the current intention of the Marine Corps to procure all of the TRI-TAC Program items. However, the majority of equipment currently planned for ultimate use in the multichannel switched system are TRI-TAC developments.

202.2.2.4 Joint Tactical Command, Control, and Communications Agency (JTC3A). The JTC^3A was established in July 1984. Its mission is to ensure the

interoperability of tactical C^3 systems for joint and combined operations through the development and maintenance of a joint architecture, interface standards, and interface definitions for tactical C^3 systems. The JTC^3A consolidated into a single organization the JTCO and its Joint Test Element (JTE), and the JINTACCS Program Office and its JITF. JTC^3A responsibilities include responsibility for the JTAO Interface program, the MTF Interface Program, and development of the TADIL J message standard to be employed with JTIDS.

202.3 Documentation. Documents establishing Marine Corps Interoperability requirements and standards are described in the following paragraphs. Other Service, joint, and allied interoperability standards are also briefly discussed. Additional detail concerning interoperability documentation, implementation, certification, and configuration management are contained in the Marine Corps IMP (to be issued) and the MCICMP of 30 September 1985.

202.3.1 I2O Requirements Documents. Marine Corps interoperability requirements are contained in required operational capability documents for individual systems and are consolidated in the Marine Corps TIC. The TIC and ROCs have their origin in doctrine and will be compatible and mutually supporting.

202.3.1.1 Technical Interface Concepts for Marine Corps Tactical Systems (TIC). The TIC is currently undergoing major revision. It will document, in a single publication, Marine Corps C^2Es, C^2E tasks, and approved interoperability requirements. As an aggregation of Marine Corps interoperability requirements, it will be the baseline for all other interoperability documentation and action. The TIC is approved and configuration managed by the Commandant of the Marine Corps (CMC) (Code CC) with CG, MCDEC exercising configuration control. Changes are processed in accordance with the MCICMP.

202.3.1.2 Required Operational Capability (ROC) Documents. Marine Corps ROCs and other requirements documents describe requirements for individual systems and items of equipment and are derived from current and planned Marine Corps organizational and doctrinal concepts. Marine Corps ROCs and other requirements documents for TDSs and communication equipment are the responsibility of CG, MCDEC, in accordance with MCO 3900.4C, Marine Corps Program Initiation and Operational Requirements Documents. Marine Corps ROCs include appropriate interoperability requirements from the TIC in sections 3 and 5. When an approved ROC results in changes to established interoperability requirements, or establishes new interoperability requirements, appropriate changes to the TIC will be made in accordance with MCO 3093.1A. Once approved, a ROC becomes the baseline for all subsequent system documentation. ROCs are prepared in accordance with MCO 3900.4C.

202.3.2 Interoperability Standards Documentation. Interoperability standards are generally categorized as message standards and circuit standards. Message standards include message formats, formatting rules and conventions, and acknowledgment instructions, and are supported by data standards. Message standards are specified in the Marine Corps, other Services and joint TIDPs, JCS publications, and NATO standardization agreements (STANAGs). Data standards are contained in message element dictionaries (MEDs) and data element dictionaries (DEDs). Circuit standards are technical specifications that establish circuit parameters such as protocols, frequency, modulation,

data rates, and signal levels. Circuit standards are documented in DoD and military standards, TIDPs, various product and interface requirements specifications, and other technical documentation.

202.3.2.1 Technical Interface Design Plan (TIDP) for Marine Tactical Systems. The Marine Corps TIDP expands on the level of detail contained in the TIC and provides baseline design criteria for the interoperability of Marine Corps TDSs. The TIDP is an interoperability standard and is subject to configuration management. The Marine Corps TIDP is compatible with the JINTACCS TIDP to the extent practicable. It is revised, as required, to support implementation of the TIC and is currently undergoing major revision. On completion of the revision, the TIDP will consist of six volumes.

a. Volume I - General. This volume will introduce the total plan and provide a user's guide to show how the subsequent volumes are used.

b. Volume II - Multiple Agency Message Exchange Sequences. This volume will consist of message exchange occurences for all operations that have an impact on Marine command and control activities.

c. Volume III - Data Element Standard (Message Element Dictionary (MED)). The MED complements other volumes of the TIDP by providing message element (data field identifiers, data use identifiers, and data items) standards that support the messages and protocols.

d. Volume IV - Message Standard. This volume contains approved Marine Corps message standards. It includes information on message purpose, structure, data content, and format, as well as acknowledgment instructions.

e. Volume V - Protocol Standard. This volume, describes protocol standards that Marine tactical data systems must satisfy in order to exchange information via each type of digital data link. Requirements are presented in terms of layered protocols that must be implemented by each Marine Corps TDS.

f. Volume VI - System Implementation. This volume will provide synopses of individual Marine Corps and other Service TDS implementations of message, data, and protocol standards and highlight deviations, if any, between the prescribed minimums and full implementation. It also is a compendium of references to individual TDS/equipment interface specifications.

202.3.2.2 Other Service, Joint, and Allied Standards

a. Other Service Standards. When the Marine Corps procures TDSs developed by the other Services, the systems may be developed according to standards peculiar to the developing Service. Examples include the Army's Tactical Data Link-1 (ATDL-1) standard used for the tactical air operations center link with the light antiaircraft missile battalion and the Tactical Fire Direction System (TACFIRE) derivative message standards used for the Battery Computer System (BCS). Responsibilities and procedures for ensuring required interoperability with other Marine Corps systems by systems using other Service standards that are procured by the Marine Corps are described in the Marine Corps IMP and the MCICMP.

b. Joint and Allied Standards. The Marine Corps participates in the development and configuration management of joint and allied interoperability standards through participation in JTC^3A-sponsored programs and by providing representatives to various joint and allied boards, panels, and working groups. Details concerning Marine Corps participation in joint and allied interoperability programs are contained in the Marine Corps IMP, the MCICMP, and MCO 5711.1E., U.S. Marine Corps Procedures for Participation in the International Standardization Process.

202.4 Implementation and Certification. Interoperability implementation refers to those procedures used to ensure that Marine Corps interoperability requirements and standards are designed into systems and equipment being built. Certification refers to those verification and testing procedures that demonstrate that the systems and equipment being tested actually perform in accordance with applicable interoperability specifications.

202.4.1 Interoperability Implementation. Implementation of interoperability requirements is a continuous process beginning with the writing of the ROC and continuing throughout the system life cycle. Interoperability management reviews, technical reviews, and audits at significant developmental milestones ensure that interoperability standards are being successfully implemented. The process is summarized in Figure 2-3 and described in detail in the Marine Corps IMP.

202.4.2 Interoperability Verification and Certification. Procedures required for verification and certification procedures ensure that TDSs and supporting communication systems perform in accordance with applicable requirements documents and interoperability specifications. Verification and certification procedures are described in detail in the Marine Corps IMP. Testing to ensure interoperability standards are being implemented is conducted within the framework of existing Marine Corps test and evaluation programs in accordance with MCO 5000.11A, Testing and Evaluation of Systems and Equipment for the Marine Corps.

In addition to Marine Corps verification and certification test requirements, the JTC^3A has implemented a joint interoperability certification program to ensure interoperability of C^2 systems and equipment employed in support of joint or combined operations described in JTC^3A Circular 9002. Normal test procedures are used for joint testing. Certification testing may be conducted by Service or Commander-in-Chief (CINC) operational elements, Service test organizations, and/or a JTC^3A field activity. Marine Corps responsibilities related to joint certification testing are described in the Marine Corps IMP.

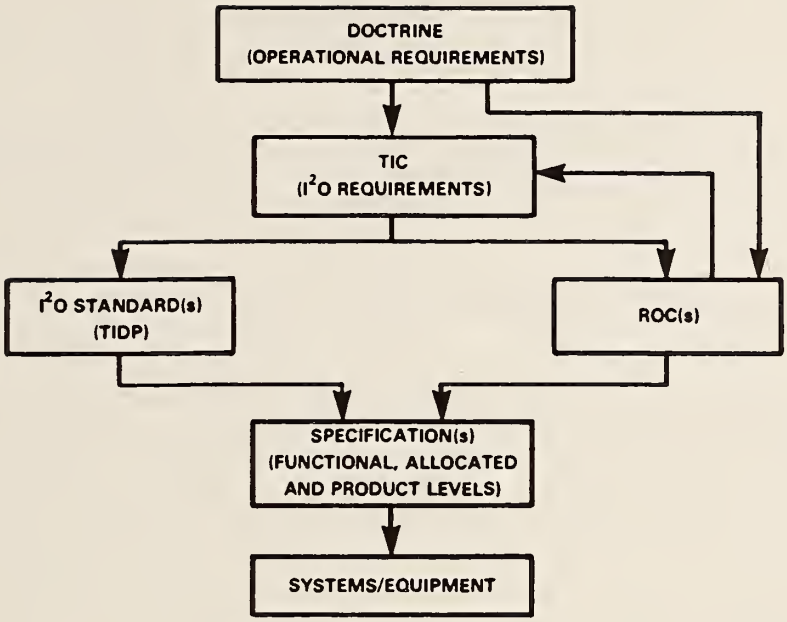

Figure 2-3. Interoperability Implementation

203 CONCEPT OF EMPLOYMENT

203.1 Introduction. The goal of Marine C^2 programs is to provide Fleet Marine Force commanders with the C^2 means to cope with the increased tempo and complexity of the modern battlefield. Integrated systems employing automation for receiving, processing, displaying, and distributing data will be used wherever they are tactically desirable and logistically supportable. Concepts of employment for C^2 systems are an outgrowth of Marine Corps requirements documentation as described in MCO 3900.4C, Marine Corps Operational Requirements Documents, and MCO P5000.10A, Systems Acquisition Manual. Concepts of employment are refined as the systems are developed, subjected to operational testing, and finally deployed to the field.

203.1.1 Organization and Missions of Marine Air-Ground Task Forces (MAGTFs). Concepts of employment of Marine Corps C^2 systems must be consistent with Marine Corps doctrine, missions, and MAGTF organizational structure.

203.1.1.1 Organization. Fleet Marine Forces comprise aviation, ground combat, combat support, and combat service support units that are routinely task organized into MAGTFs for deployment and training. When properly task organized for combat these integrated combined arms forces can perform missions ranging across the full spectrum of conflict and crisis situations.

Regardless of size, MAGTFs include four major organizational components:

- A command element.
- A ground combat element (GCE).
- An aviation combat element (ACE).
- A combat service support element (CSSE).

Normally, there is only one GCE, one ACE, and one CSSE in a MAGTF.

There are three types of MAGTFs, each tailored to accomplish an assigned mission:

- Marine amphibious unit (MAU).
- Marine amphibious brigade (MAB).
- Marine amphibious force (MAF).

203.1.1.1.1 Marine Amphibious Unit. A MAU is a task organization built around a battalion landing team (BLT) and a composite aircraft squadron. Normally, it is employed to fulfill routine forward afloat deployment requirements. The MAU provides an immediate reaction capability to crisis situations and is capable of limited combat operations. Because of comparatively limited sustainability, a MAU is normally supported from its seabase. The MAU is usually the forward afloat deployed element of a larger landing force, such as a MAB, which would be constituted, as required, from the continental United States (CONUS) or forward based, combat-ready Fleet Marine Forces.

203.1.1.1.2 Marine Amphibious Brigade. A MAB is a task organization normally built around a regimental landing team (RLT) and a Marine aircraft group (MAG). It is capable of conducting amphibious assault operations of limited scope. During potential crisis situations, a MAB may be forward deployed afloat for an extended period to provide immediate response and may serve as the precursor of a MAF. MAB combat operations may be supported from a seabase, facilities ashore, or a combination of the two.

203.1.1.1.3 Marine Amphibious Force. A MAF is the largest of the MAGTFs and is normally built around a division and a Marine aircraft wing (MAW). However, it may range in size from less than a complete division and MAW up to several divisions and aircraft wings, together with an appropriate combat service support organization. It can be tailored for a variety of combat missions in any geographic environment and is capable of conducting a wide range of amphibious assault operations and sustained operations ashore.

203.1.1.1.4 Composite MAGTFs and Prepositioning MABs. Composite MAGTFs may be created by the combining of forward-deployed or mission-deployed amphibious forces and may include land or maritime prepositioning forces. Examples are the combining of a forward-deployed MAU with a follow-on maritime prepositioning ship (MPS) MAB to constitute a more capable landing force (LF), or the combination of two MABs with a follow-on MAF, division, aircraft wing and combat service support group (CSSG) headquarters, and augmenting units to constitute a MAF. Prepositioned deployment is a strategic mobility enhancement technique to administratively deploy a MAGTF combining the speed of airlift with the capability of landbased or seabased prepositioned equipment and supplies.

203.1.1.2 Missions. Possible MAGTF missions include:

- Operations to seize or defend advanced naval bases and for the conduct of such land operations as may be essential to the prosecution of a naval campaign.

- Assist U.S. diplomatic efforts through peaceful projection of influence and, during periods of threatened crisis, provide a selective show of force and interest.

- Permit early commitment of U.S. forces to combat, where required.

- Preserve options limiting the degree, direction, and character of U.S. involvement.

- Assist allies through provision of flexible and selective levels of military assistance.

- Provide humanitarian assistance/disaster relief.

- Protect/evacuate noncombatants or protect installations.

203.1.2 Scenario. Concepts of employment for Marine Corps C^2 systems, provided in this section, are based on a generic scenario for an amphibious task force (ATF) with a MAF-size landing force. Considerations for the

employment of C^2 systems by MAB- and MAU-size landing forces are described where they differ significantly from those employed by a MAF. Extended land warfare operations, including joint and combined operations, and withdrawal operations are also discussed.

Concepts of employment are in accordance with LFM 01/NWP 22(B), Doctrine for Amphibious Operations, FMFM 0-1, Marine Air-Ground Task Force Doctrine, and other appropriate NWPs, LFMs, FMFMs, and approved documentation for the employment of described C^2 systems. Concepts, procedures, and techniques for the employment of C^2 systems undergo evolution as the systems are developed and put to use. To some degree, systems use may vary to exploit capabilities of those already in service while waiting for others to be fielded. Changes resulting from the introduction of new systems are expected to be more procedural than doctrinal; however, some of the systems provide new capabilities. Their eventual impact on doctrine, procedures, and techniques may not be immediately clear and their potential impact must be evaluated carefully during operational use.

A MAGTF embarked in amphibious shipping may employ various combinations of helicopters, air cushion landing craft (LCAC), assault amphibious vehicles (AAVs), and displacement hull landing craft for the conduct of landings. Landing of the initial waves by helicopter, LCAC, or a combination of the two will make it possible to launch the initial assault waves from over-the-horizon with ship-to-shore stand-off distances of 25 miles or more. With the advent of the MV-22 Osprey, these distances can be significantly increased. Over-the-horizon launch will make it possible to maintain an element of surprise concerning the actual landing sites until the last possible minute. With the LCAC, many hydrographic and topographic factors, previously considered obstacles, can now be exploited, greatly increasing the number of sites over which units can be landed. The preparation of alternate landing plans will make it possible to make the final decision concerning the landing sites almost immediately prior to launching of the initial waves, thus avoiding enemy force concentrations and defenses as far as possible, while still landing at sites suitable for accomplishment of the mission.

After launching the initial waves, and depending on the threat, helicopter and LCAC support ships may move closer to the beach to occupy helicopter support ship and LCAC support ship operating areas. Other ships supporting AAVs and displacement hull landing craft may also move to operating areas closer to the beach.

Depending on the size and mission of the ATF and its landing force, many command, control, and coordination functions may either be retained by commander amphibious task force (CATF) aboard the ATF flagship or passed to commander landing force (CLF) ashore when he indicates his readiness to assume those functions. C^2 systems and procedures must support these alternatives and the orderly transition of responsibilities from CATF to CLF and from CLF to CATF or to a joint or unified commander, as appropriate. CATF and CLF will normally be embarked aboard the same ship until CLF phases his headquarters ashore. Commanders of the GCE, ACE, and CSSE may be embarked on the same or different ships, which, in the latter case, will tend to complicate command, control, and coordination functions.

Creation of a composite MAGTF requires detailed planning for effective integration of forces that may be from different Marine amphibious forces and possibly from different Fleet Marine Forces. The integration of command, control, coordination, and administrative responsibilities must be accomplished without a loss of combat effectiveness or disruption of ongoing operations. Command and control during the consolidation of the elements of several MAGTFs into a larger MAGTF is more complex, but not dissimilar from the passage of responsibilities from CATF to CLF as combat power is built up ashore in an amphibious assault. A fundamental requirement is for common standing operating procedures in the areas of command, control, coordination, and administrative procedures among the forces being combined.

The employment of Marine Corps C^2 systems in amphibious operations requires close cooperation between the Navy and the Marine Corps to ensure interoperability between landing force and Navy C^2 systems both aboard ship and ashore. The interfaces between these systems, in many cases, need to be automated if the full benefits of the systems are to be realized; in other cases, manual interfaces will be adequate. Similar interoperability requirements exist with the C^2 systems of other Services and allied nations in joint and combined operations.

203.1.3 Command and Control Systems

203.1.3.1 Overview. This section briefly introduces those C^2 systems, other than communication systems, currently in use or projected for use in the 1986-2001 time frame, around which concepts of employment are built in section 203.2 More detailed descriptions of these and related systems are contained in chapters III, IV, and VI. Communication systems are described in chapter V.

TDSs are being fielded in the FMF in increasing numbers. New and improved TDSs replace manual processes and older automated systems as the latter become obsolete and uneconomical to maintain. Systems currently in use include:

- Marine Air-Ground Intelligence System (MAGIS)
  - Intelligence Analysis Center (IAC), AN/TYQ-19.
  - Tactical Electronic Reconnaissance Processing and Evaluation System (TERPES), AN/TSQ-90.
  - Imagery Processing (IP) segment, ES-40.
  - Imagery Interpretation Facility (IIF), AN/TYQ-12(V)2.
  - Phase III Southeast Asia Operations (SEAOPS) Unattended Ground Sensors (UGS).
- Marine Air Command and Control System
  - Tactical Air Command Central, AN/TYQ-1
  - Tactical Air Operations Central, AN/TYQ-2
  - Tactical Data Communications Central, AN/TYQ-3A

- Airborne-Mobile Direct Air Support Central, AN/UYQ-3A.
- Operations Central, AN/TSQ-122.
- Radar Bomb Directing Set (RBDS), AN/TPB-1D.
- Marine Air Traffic Control and Landing System (MATCALS):
  --Radar Surveillance Central, AN/TSQ-107.
  --Radar, Ground Control Approach, AN/TPN-22.
  --Control and Communications System, AN/TSQ-131(V).
- Radar Set, AN/TPS-63.
- Radar Set, Lightweight, 3D, AN/TPS-59.
- Radar Set, AN/TPS-32.
- Hawk Missile System:
  --Battery Control Central (BCC), AN/TSW-13.
  --Information Coordination Central (ICC), AN/MSQ-111.
  --Platoon Command Post (PCP), AN/MSW-18.

Projected additions during the 1987-2001 time frame include:

- Position Location Reporting System (PLRS), AN/TSQ-129, with a projected initial operational capability (IOC) in 1987.
- The Improved Direct Air Support Central (IDASC) will achieve an IOC in 1987.
- Battery Computer System (BCS), AN/GYK-29 will be introduced in 1988.
- The Battery Command Post, AN/_____ will replace the AN/TSW-13 Battery Control Central, the AN/MSQ-111 Information Coordination Central, and the AN/MSW-18 Platoon Command Post of the Hawk Missile system in 1989.
- The Radio Receiving Set, AN/TRQ-32(V), will achieve an IOC in 1987 or 1988. It will serve as an interim element of the Integrated Signals Intelligence System (ISIS) until the Communication Collection Outstation (CCO) is fielded in FY92.
- The Stand Alone Analysis Subsystem (SAAS) segment of ISIS, the Technical Control and Analysis Center (TCAC), AN/TSQ-130, will achieve an IOC in 1988.
- Tactical Air Operations Module, AN/TYQ-23(V)1 will replace the AN/TYQ-2 and AN/TYQ-3A, that currently constitute the Tactical Air Operations Central, in 1990.
- The Tactical Combat Operations System (TCO) will achieve an IOC in 1990.
- The NAVSTAR Global Positioning System (GPS) will achieve an IOC in the Marine Corps in 1991.

- The Advanced Tactical Air Command Central (ATACC) will replace the AN/TYQ-1 by 1992.

- The MAGIS Joint Source Imagery Processor (JSIP) will replace the MAGIS IP and IIF in FY 1991.

- The ISIS CCO will replace the AN/TRQ-32(V) starting in FY92.

- The Marine Integrated Fire and Air Support System (MIFASS) is planned for an IOC by 1993.

- The Tactical Intelligence Management System (TIMS) will be fielded in FY 1993.

- Automated Data Processing Equipment for the Fleet Marine Force (ADPE-FMF) and the Deployable Force Automated Services Center (DFASC) will be replaced by End Use Computing Equipment (EUCE) and the MAGTF Automated Services Center (MASC) respectively.

Automated assistance for C^2 functions in amphibious operations will be enhanced when the first Amphibious Assault Ship (Multi-Purpose) (LHD 1) joins the fleet in 1989. It will be equipped with the new Flag Data Display System (FDDS), an improved Integrated Tactical Amphibious Warfare Data System (ITAWDS), an automated intelligence system similar to, and compatible with, the MAGIS-IAC, and a PLRS master station. MIFASS and TCO, when they become available, are also planned for installation in LHD Class ships. PLRS, MIFASS, and TCO--known as Shipboard MTACCS--as well as the new or improved Navy C^2 systems, are being considered for installation in Amphibious Command Ships (LCCs), Amphibious Assault Ships (General Purpose) (LHAs), and Amphibious Assault Ships (Helicopter) (LPHs) in connection with the Navy Warfighting Improvement Program (WIP). NAVSTAR GPS is also scheduled for installation in amphibious ships in the 1990s.

203.1.3.2 Marine Air Command and Control System (MACCS). MACCS includes the tactical air command center (TACC) and two primary subordinate control agencies: the tactical air operations center (TAOC) and the direct air support center (DASC). It also includes the other systems listed in section 203.2, and which are described in chapter III. MACCS provides the structure for the tactical air commander (TAC) to exercise centralized coordination and supervision of air operations while decentralizing control to subordinate agencies. The TACC is the senior MACCS agency from which the TAC exercises supervision, coordination, and general control of tactical air operations. The TAOC is a subordinate element of MACCS designed to control an air defense sector, en route air traffic, and air defense operations, including assigned manned interceptors and surface-to-air missiles. The DASC is a subordinate element that is the principal air control agency responsible for the conduct of tactical air operations directly supporting ground forces. The TACC and TAOC are currently supported by automated tactical data systems, while the DASC uses manual procedures. The TACC is supported by the Tactical Air Control Central, AN/TYQ-1, and the TAOC by the Tactical Air Operations Central, AN/TYQ-2. The Tactical Data Communications Central, AN/TYQ-3A is employed with both the AN/TYQ-1 and the AN/TYQ-2. These systems were originally developed under the Marine Tactical Data Systems (MTDS) Program in

the 1950s and 1960s. Since that time, they have been upgraded and enhanced to extend their life and improve their capabilities until suitable replacements can be fielded. The Tactical Air Operations Module, AN/TYQ-23(V)1, will replace the AN/TYQ-2 and its associated AN/TYQ-3A, currently employed by the TAOC, starting in 1990. A program to improve the Tactical Air Command Central was initiated in June 1985 with the approval of the ROC for an ATACC. The projected IOC for the ATACC is during the early 1990s. The possible use of common hardware and Ada software to meet ATACC, TCO, and TIMS requirements is being explored. The possible use of common hardware and Ada software to meet ATACC, TCO, and TIMS requirements is being explored. MIFASS, also to be fielded in the 1990s, will provide, inter alia, automated support for the DASC. In the meantime, the present DASC, the AN/TSQ-122, has exceeded its normal service life and is being maintained through a depot-level repair program that will extend the service life expectancy of the system until 1987. A program has been initiated to develop, produce, and field the IDASC to replace the AN/TSQ-122 until the full operational capability with MIFASS is achieved in the latter part of the 1990s. C^2 functions will be performed manually in the IDASC much as is done with the current system. An IOC of 1987 and a full operational capability in 1988 are projected for the IDASC.

203.1.3.3 Marine Air-Ground Intelligence System (MAGIS). MAGIS is an "umbrella" program that includes a host of intelligence systems, both in service and in development. MAGIS programs are directed toward exploiting the increased capability to collect information through communication, reconnaissance, surveillance, and target acquisition techniques, and to enable intelligence staffs to process the large quantities of information collected into timely, accurate, and pertinent intelligence that can be disseminated quickly to appropriate commanders and their staffs. Principal intelligence systems included in the concept of employment are described briefly in the following paragraphs.

203.1.3.3.1 Intelligence Analysis Center (IAC) Segment. The IAC is the heart of MAGIS. During planning and execution of operations, information from agencies external to the MAGTF and from other MAGIS segments organic to the MAGTF are passed to the IAC for consolidation. MAGIS-IAC-originated messages are disseminated via communication centers or by secure voice. Normally, one IAC is assigned to each MAF and may be retained at the MAF headquarters or assigned to the ACE or GCE headquarters. The automated intelligence functions at MAB and MAU levels will be supported by TIMS and TCO. TIMS will handle intelligence information with a classification above Secret and TCO will handle intelligence information with a classification of Secret or lower. TIMS has a planned IOC in the early 1990s. The IAC is currently operational.

203.1.3.3.2 Imagery Processor (IP) Segment. The IP segment of MAGIS provides the capability to process multisensor imagery acquired by the Marine tactical reconnaissance squadron (VMFP) to which they are assigned, and to duplicate, print, and enlarge photographic materials required for intelligence and operational use. The IP segment is operational and currently undergoing phased upgrading. The IP will be replaced by the JSIP in the early 1990s.

203.1.3.3.3 Imagery Interpretation Facility (IIF) Segment. The IIF segment of MAGIS provides the imagery interpreter with a computer-assisted capability to rapidly and accurately exploit multisensor imagery and to produce formatted interpretation reports, plots, and other products. The IIF segment will also be replaced by the JSIP in the early 1990s.

203.1.3.3.4 Joint Source Imagery Processor (JSIP). The JSIP--formerly named the All Source Imagery Processor (ASIP)--will be a mobile, ground processing facility designed to receive and exploit, in near-real-time, data received from side-looking airborne radar (SLAR), infrared, and electro-optical (EO) systems carried on reconnaissance aircraft. It will exploit near-real-time soft copy digital imagery, data linked from the sensor platform to the processing facility. The JSIP will replace the IIF and IP segments of MAGIS in the early 1990s.

203.1.3.3.5 Tactical Electronic Reconnaissance Processing and Evaluation System (TERPES). The TERPES segment performs processing, evaluating, and reporting of electronic reconnaissance information collected by EA-6A/B aircraft, and provides automated mission planning support for airborne electronic warfare missions.

203.1.3.3.6 Integrated Signals Intelligence System (ISIS). ISIS is a concept for providing a semiautomated tactical signals intelligence (SIGINT) collection, analysis, and reporting system designed to provide MAGTF commanders with timely, accurate SIGINT and electronic warfare (EW) support in the form of combat information and combat intelligence. The concept calls for a SAAS and a CCO subsystem. Current plans are to procure the Army's TCAC, to meet the interim SAAS requirement, and to evaluate existing communications intercept/direction finding systems; i.e., AN/TRQ-32; with respect to a nondevelopmental item procurement to meet the CCO requirement. The systems will be organic to Marine radio battalions and will be task-organized as direct support units (DSUs) to support MAGTFs and subordinate elements thereof.

203.1.3.4 Position Location Reporting System (PLRS). PLRS is an automated tactical data system that provides accurate, real-time position location, navigation, and identification information to PLRS-equipped units under all conditions of weather and visibility. PLRS information is available to all PLRS user unit-equipped elements of a MAGTF and to commanders and their staffs to assist them with maneuver control, fire support planning and coordination, conflict avoidance, and other C^2 functions. PLRS also has the capability to transmit short free-text messages between system users. Other communication, navigation, and identification (CNI) systems that may be fielded and complement PLRS during the 1987-2000 time frame are the NAVSTAR GPS, the JTIDS, and the Small Unit Navigation System (SUNS).

203.1.3.5 Marine Integrated Fire and Air Support System (MIFASS), AN/UYQ-38(V). MIFASS is a display and information processing system that will provide semiautomated assistance to MAGTF commanders at infantry and artillery battalion level and above for accomplishing command, control, coordination, and integration functions inherent in the employment of aviation, artillery, naval surface fire support, and mortar assets. MIFASS equipment will display near-real-time information; provide automated assistance in message processing, data base management, fire support planning, tactical fire direction, fire support coordination, and artillery and mortar technical fire direction; and process, present, and display information to assist decision making. MIFASS will have an automated (Level 4) interface with PLRS.

203.1.3.6 Tactical Combat Operations (TCO) System. TCO will be a data input, storage, information retrieval, and processing system to support G-3/S-3 and

G-2/S-2 planning and operational functions. TCO will support intelligence functions with a classification of Secret or lower. IAC and TIMS will support intelligence functions of higher-level classification. It will be used to support selected ground, aviation, service support, and MAGTF commanders and their staffs down to the battalion and squadron levels in developing, producing, and controlling the execution of plans and orders. TCO will have an automated (Level 4 or Level 5) interface with MIFASS. The possible use of common hardware and Ada software to meet ATACC, TCO, and TIMS requirements is being explored.

203.1.3.7 Tactical Warfare Simulation, Evaluation, and Analysis System (TWSEAS). TWSEAS is a computer-assisted tactical training support system for use in the design, control, evaluation, and analysis of tactical exercises, including both field and landing exercises and command post and map maneuver exercises. TWSEAS is one of the systems included in the Marine Corps Tactical Command and Control Systems (MTACCS) concept and will interoperate with TDSs during training exercises. TWSEAS is described in detail in chapter III and is not dealt with further in this chapter.

203.1.3.8 Automated Information Systems (AISs). FMF units employ AISs and supporting automated data processing equipment in garrison, during all phases of amphibious operations, and subsequent operations ashore, to accomplish administrative, logistic, and readiness management functions. ADPE-FMF has been issued to FMF units down to battalion, squadron, and separate company levels to provide an in-garrison and deployable data processing capability that is interoperable with Class I AISs. This capability is being expanded with the procurement of EUCE to provide increased memory and communication capabilities. In garrison, ADPE-FMF/EUCE exchange data with a Regional Automated Services Center (RASC). The DFASC, or its successor, the MASC, will provide MAGTF commanders with the capability to sustain Class I systems in the field. Navy AISs employed by Marine Corps aviation units in garrison and deployed operate on AN/UYK-65 computers provided by the Navy. AISs and the hardware on which they operate are described in detail in chapter VI.

203.1.3.9 Navy Command, Control, Communications, and Intelligence (C3I)/Combat Systems. Navy C^3I/Combat systems in amphibious ships and that are of direct interest to the Marine Corps are, like C^2 systems of the Marine Corps, in a state of transition. The following paragraphs provide a brief description of Navy C^3I/Combat systems currently in use in selected ships and those planned for installation in these ships in the future. More detailed descriptions of these systems are contained in chapter IV.

203.1.3.9.1 Amphibious Command Ship, LCC 19 Class. LCC 19 Class ships' C^3I/Combat systems include the Amphibious Flagship Data System (AFDS) and the Naval Intelligence Processing System (NIPS). AFDS consists of two functionally independent segments, the Naval Tactical Data System (NTDS) and the Amphibious Support Information System (ASIS). The Navy WIP calls for an upgrade of LCC 19 Class ships' C^3I/Combat systems, to include incorporation of the FDDS, replacement of AFDS with an improved ITAWDS that will comprise the Tactical Data System (TDS) and the Tactical Information Processing System (TIPS), and the incorporation of PLRS. Plans include the addition of MIFASS, TCO, and NAVSTAR GPS when those systems becomes available. An interface will provide the capability to display PLRS PLI on the FDDS large screen display in

the LFOC. The existing Amphibious Command Ship Intelligence Center AN/SSQ-64(V) will be replaced by newer, more capable systems including the AN/SYQ-9(V)3 NIPS that will be compatible with the MAGIS IAC.

203.1.3.9.2 Amphibious Assault Ship (General Purpose), LHA 1 Class. LHA 1 Class ship C^3I/Combat systems include ITAWDS and NIPS. ITAWDS on LHA 1 Class ships currently consists of two functionally independent segments, the TDS and the Management Information System (MIS). ITAWDS TDS and NTDS on LCCs are compatible; ITAWDS MIS and AFDS ASIS are not compatible. The Navy WIP calls for an upgrade of LHA 1 Class C^3I/Combat systems to include incorporation of the FDDS, and PLRS, and replacement of the existing ITAWDS with an upgraded ITAWDS-TDS and -TIPS. The joint intelligence center on LHAs is currently equipped with the AN/SYQ-9(V)1 NIPS. MIFASS, TCO, and NAVSTAR GPS are also planned for installation when they become available.

203.1.3.9.3 Amphibious Assault Ship (Multi-Purpose), LHD 1 Class. LHD 1 Class ships will be delivered to the Navy starting in 1989. Their C^3I/Combat systems at that time will include FDDS, the upgraded ITAWDS-TDS and -TIPS, the AN/SYQ-9(V)3 NIPS, and the PLRS master station with the same interfaces described for the LCCs. However, the initial PLRS interfaces for the first LHD will be manual, to be upgraded at a future date. MIFASS, TCO, and NAVSTAR GPS will be added as those systems become available.

203.1.3.9.4 Amphibious Assault Ship (Helicopter) (LPH) Class. The LPH WIP includes provisions for incorporating ITAWDS-TDS and -TIPS, PLRS, MIFASS and TCO into appropriate command and control spaces.

203.1.3.10 Interfaces. Appendix C, Marine Corps Tactical Data Systems Interface Requirements, contains matrices depicting present and proposed interoperability requirements for TDSs. Additional details concerning interfaces for individual systems are included in chapters III, IV, and VI.

203.2 Amphibious Operations. This section describes a general concept of employment for Marine Corps TDSs and related systems during the five phases of an amphibious operation; i.e., planning, embarkation, movement to the objective area, rehearsal, and assault.

203.2.1 Planning Phase. Amphibious planning is characterized by concurrent, parallel, and detailed planning by all participating forces. Although planning is a continuous process from receipt of the initiating directive by CATF and CLF to termination of the operation, the planning phase is defined as that period extending from the issuance of the initiating directive until the time of embarkation, which marks the commencement of the operational phases. Planning does not cease with embarkation, but a marked change occurs in the relationship between CATF, CLF, and other Service component commanders when the operational phases begin. During the planning phase, CATF coordinates planning; however, CATF and other component commanders designated in the initiating directive are on equal levels of command. At the commencement of the operational phases, CATF assumes full responsibility for the entire force and for the operation.

The type of deployment for which a MAGTF is activated has a significant bearing on planning. A MAGTF activated for a specific mission is able to concentrate its planning effort on the accomplishment of that mission. Command and staff action is devoted to a single area of operations and the major planning effort may be accomplished prior to embarkation. Activation of a MAGTF for forward deployment normally requires detailed planning for a variety of areas of operation and for various types of operations, exercises, and contingencies. Maximum reliance is placed on detailed standard operating procedures (SOPs), initial planning by higher headquarters, and existing contingency plans. The scope of planning is expanded by the need for multiple plans and the additional administrative requirements for extended periods afloat.

Marine Corps TDSs and AISs will be employed extensively to assist with operations planning. Planning by MAGTFs embarked in amphibious shipping; e.g., a forward deployed MAB or MAU; will employ Shipboard MTACCS, AISs, the Navy's ITAWDS-TIPS, and the NIPS located in the intelligence center of LCCs, LHAs, and LHDs. ITAWDS-TIPS will contain standard data base files for embarkation and landing plans, supporting arms schedules and reports, the target list and other user-specified administrative, logistics, and embarkation functions.

203.2.1.1 Communication Planning. Amphibious operations require detailed integration of Navy and landing force communication plans. LFM 01, Doctrine for Amphibious Operations, FMFM 10-1, Communications, and other doctrinal publications describe, in detail, communication planning for amphibious operations. The mission, task organization, command relationships, concept of operations, and the availability of C^2 systems assets will influence the development of communication plans. Concepts of employment for C^2 systems during the years addressed by this plan will be significantly affected by:

- The evolution of over-the-horizon-launch concepts and capabilities for amphibious assaults.
- The electronic warfare threat and the requirement for secure communications and reduced electromagnetic emission footprints.
- The requirement for Marine Corps digital and analog communication equipment to be compatible with amphibious and naval surface fire support ships' systems and the systems of other Services.
- The availability of sufficient compatible communications equipment, radio frequencies, and communications security (COMSEC) equipment to meet requirements.

Chapter V, Marine Corps Communication Architecture, describes supporting communications for the time frame addressed in this plan.

During the planning phase, secure communications between Navy and landing force elements are required and normally will be provided by the Automatic Digital Network (AUTODIN), the Automatic Secure Voice Communications (AUTOSEVOCOM) Network, and other secure means of information exchange. Major

Marine Corps commands served by the Worldwide Military Command and Control System (WWMCCS) Information System (WIS) will also use that system for exchange of planning data with other WIS-supported headquarters. Chapter IV contains additional information concerning WWMCCS and WIS.

203.2.1.2 Intelligence Planning. MAGTF intelligence planning, accomplished prior to embarkation, will exploit the capabilities of the MAGIS segments.

In garrison, the IAC will be available at the MAF headquarters to assist with the preparation of intelligence estimates and the intelligence annex, intelligence briefs and summaries, special working files, and many of the other tasks confronting the intelligence staff. On receipt of an initiating directive, information pertinent to the amphibious objective area (AOA) can be obtained from the NIPS at the appropriate fleet intelligence center and other sources, and entered into the IAC data base. The ATACC will also be able to load and process NIPS information and be capable of developing an electronic order of battle (EOB) data base from the NIPS tapes or manual entry prior to embarkation. TCO and TIMS will support intelligence functions at echelons not supported by the IAC. The TIMS will be provided to MAB and MAU headquarters in the early 1990s. Similar capabilities will be provided to the division and aircraft wing headquarters and their subordinate echelons. MIFASS and TCO equipment with appropriate firmware and software will be employed in this capacity starting in 1994.

Depending on the situation, the IP and IIF segments, or the ASIP that will replace them, may be employed to process and interpret multisensor imagery collected by the VMFP and sources external to the MAF. TERPES may be exploited to process EW information gathered by the Marine tactical electronic warfare squadron (VMAQ) and other sources, and assist with EW planning, including the development of electronic order of battle (EOB), and map overlays of the EW threat.

SIGINT planning will be accomplished at the MAGTF headquarters by the G-2 signals intelligence officer (SIO). DSUs are not normally attached to the MAGTF during the planning phase.

203.2.1.3 Position Location Reporting System Employment Planning. Effective employment of PLRS requires extensive, detailed planning. An employment plan and the data base for the particular operation must be developed. The PLRS employment plan is prepared as an appendix to the operations annex to the operation order. Together with unit PLRS employment SOPs, the PLRS employment plan provides the technical and tactical data required for coordinated employment of the PLRS. The Position Location Reporting System (PLRS) Development Bulletin 1-87, and the PLRS user unit and master station operators' manuals contain details concerning information that is included in operation orders and SOPs.

Of particular significance in amphibious and joint operations, is the requirement to plan for the coordinated employment of PLRS installed in amphibious ships as part of Shipboard MTACCS, landing force PLRS assets, and PLRSs of other Services that may be operational in the area during joint operations. Plans must provide for adequate PLRS coverage for the landing

force by the shipboard system until landing force assets are established ashore and for coordinated employment of the systems thereafter.

In order for PLRS to provide position location information (PLI) in the military grid reference system, it is necessary to have a minimum of three appropriately located units for which accurate coordinate locations are known and can be input into PLRS. These accurately located units become reference units and form the base from which the position of other user units are computed. Establishing reference units is a fundamental prerequisite for providing assault elements with PLRS PLI and navigation information from the start of the assault. Reference units may be covertly established ashore by reconnaissance units prior to launching of the assault or emplaced in stationary, accurately located buoys, or small craft. The PLRS-NAVSTAR GPS automated interface, currently under development, will make it feasible to operate PLRS with a dynamic reference base provided by reference units in slow-moving ships or craft. Planning must make provisions for establishing reference units.

PLRS is an ultra-high frequency (UHF) system operating between 420 and 450 megahertz (MHz), limiting its use to units with line-of-sight (LOS) between antenna systems. This limitation is overcome by user units acting as relays for other user units located beyond LOS from the master station. Relay units can be established at critical locations and airborne relays can also be used to significantly increase the effective range of the system. Planning must make provision for necessary relay units.

PLRS library and map tapes are prepared during the planning phase. The library tape is a computer tape file containing the essential data base information required for effective operation of the system.

The PLRS display control console can display two maps, a background map with a foreground map superimposed over it. The background map is used to display fixed geographic map data, and the foreground map to display tactical data, such as command and control measures, and PLRS PLI. Background maps are recorded on map tapes and should be prepared for the area of operations. Map tapes can be prepared for areas 50 x 50 kilometers square and for areas 300 x 300 kilometers square.

Plans must include provisions for entry of PLRS library and map tapes into the PLRS element of the Shipboard-MTACCS of the appropriate ships, when they are so equipped.

Planning PLRS employment requires close coordination and cooperation between the G-3/S-3, G-2/S-2, fire support coordinator, air officer, communication officer, PLRS unit commander, and with Navy and other Service opposite numbers, as appropriate.

203.2.1.4 Fire Support Planning with MIFASS. MIFASS will be used to support landing force fire support planning. During the planning phase, MIFASS fire planning functions can be employed to assist with preparation of the detailed landing force fire support requirements and the modification of plans and schedules as planning progresses. MIFASS target intelligence processing

functions can be used to assist with preparation of landing force input to the target list, to support maintenance of the landing force copy of that list, and to disseminate appropriate target list information to subordinate units. During the planning phase, MIFASS data base tapes will be prepared. Table 2-1 lists examples of types of information that can be entered into the data bases during the planning phase.

Table 2-1. Examples of MIFASS Data Base Information

1. Message routing instructions.
2. Unit call signs.
3. Map/geographic data.
4. Initial coordination and control measures (battlefield geometry).
5. Designation of backup centers.
6. Appropriate portions of plans and orders.
7. The target list.
8. Position location information requirements (track descriptor messages).
9. Survey control point locations.
10. Supporting arms assets available and characteristics thereof.
11. Recurring special report and message formats not already programmed.

Plans must include provisions for transfer of appropriate data base information to the MIFASS element of the Shipboard MTACCS in the supporting arms coordination center (SACC) of the ATF flagship, if the ship is so equipped.

In the cases of MAB- and MAU-level operations, provisions must be made to provide necessary landing force representatives in the SACC when the GCE command element displaces ashore. Marine Corps doctrine provides that the fire support coordination center (FSCC) of the senior MAGTF GCE will function as the FSCC for the MAGTF, and will provide the required landing force representation in the flagship SACC. They may be assisted by the MAGTF headquarters fire support special staff. However, that staff normally does not have the personnel required to staff landing force positions in the SACC after the GCE FSCC moves ashore. By the nature of missions that may be assigned to a MAB or a MAU, CATF and CLF may require that most, if not all, fire support missions be cleared at their level. Control of air and naval surface fire support may be retained by CATF. Control of artillery normally will rest with the GCE commander except to the extent that clearance and coordination may be required at the CATF and CLF levels. Once the GCE commander is established ashore with an operational FSCC, responsibility for

control and coordination of fire support within the GCE area of responsibility normally will be passed to him in accordance with current amphibious doctrine. FSCC personnel of the MAB and MAU GCEs will move ashore when the GCE commander moves his command post ashore. At that time, MAB and MAU staffs must provide the necessary personnel to carry out landing force responsibilities in those aspects of supporting arms control and coordination retained by CATF aboard the flagship. These responsibilities include providing operators for Shipboard MTACCS. Staffing of the SACC is normally not a problem in MAF-level operations. A rear echelon of the division FSCC remains aboard the ATF flagship in the SACC until the GCE FSCC and associated DASC are established ashore, at which time most responsibilities for coordination and control of supporting arms in the MAF area of operations are usually passed from CATF to CLF ashore. Shipboard MTACCS may continue to function in a backup capacity, providing the necessary operators are available. In cases where the MAF may have two or more GCEs, the MAF staff may have to be adequately staffed to operate an FSCC.

203.2.1.5 Operational Planning with TCO. TCO, like MIFASS, will support MAGTF planning during all phases of an operation. The preparation of data bases, the transfer of data between landing force TCO assets and the TCO element of Shipboard MTACCS and vice versa, and provision for operators in the ATF flagship landing force operations center (LFOC) and flag plot are similar to the considerations described above in relation to planning for the use of MIFASS.

203.2.1.6 Aviation Planning. Aviation planning prior to embarkation includes preparation of data bases for the AN/TYQ-2 Tactical Air Operations Central or for the AN/TYQ-23(V)1 Tactical Air Operations Module that will replace it. Data bases are also prepared for the AN/TYQ-1 Tactical Air Control Central or its replacement, the ATACC. A data base for MATCALS is also prepared. The present DASC and its near-term replacement, the IDASC, are manual. In the future, automated support for the DASC will be provided by MIFASS. Aviation planning by the embarked MAGTF, is done in conjunction with the CATF staff in the tactical air control center (TACC(N)), helicopter direction center (HDC), SACC, and LFOC, as required. Automated support will be provided by ITAWDS-TIPS and, when introduced on LCCs, LHAs, LHDs and LPHs, by MIFASS and TCO.

203.2.1.7 Planning Supported by AISs. In garrison and deployed aboard ship or ashore, MAGTF administrative and logistic functions are supported by ADPE-FMF or EUCE down to the battalion, squadron, and independent company levels. In garrison, a regional automated services center (RASC) supports MAGTF headquarters planning by:

- Providing automated data processing (ADP) support.

- Maintaining required class I and II data bases.

- Preparing reports.

Functions performed by the RASC in garrison will normally be performed by a DFASC or MASC for a MAB or MAF deployed ashore and by ADPE-FMF or EUCE for a MAU.

Aboard ship AISs operate on ADPE-FMF or EUCE and on the TIPS of ITAWDS, or to a lesser extent on the older MIS of ITAWDS or ASIS of AFDS.

203.2.2 Embarkation Phase. Normally, MAGTF TDSs are not operational during embarkation. Continued planning is supported by AISs ashore, ADPE-FMF/EUCE operated aboard ship, Shipboard-MTACCS TCO, and ITAWDS-MIS or -TIPS. Intelligence planning will be supported by NIPS. All landing force TDSs and AISs should be embarked in such a manner that they are available for maintenance, training, and data base update.

The Marine Corps has a stated requirement for working spaces and power for temporary installation of EUCE in amphibious control and landing force administrative spaces in LCC, LHA, LHD, LPH, and LPD type ships. In addition, there is a stated requirement for working space and power for temporary installation of EUCE in landing force administrative spaces in LSD, LST, and LKA type ships.

Special provisions may be necessary to provide suitable electrical power where systems are not compatible with ship's power. For example, the PLRS master station requires 15 kilowatt, 3 phase, 60 Hertz, grounded (5 wire) electrical power. A military specification (MIL-T-15108C) transformer must be used in the connection of LF PLRS master stations to ship's power. Shipboard training with the TAOM requires coupling to ship's power via a TAOM unique transformer.

Data bases developed during planning, using landing force TDSs, will be transferred to shipboard systems by magnetic tape or other means as appropriate. For example:

- PLRS library and map tapes developed on landing force PLRS assets will be transferred to the Shipboard-MTACCS PLRS.

- Intelligence files developed using the IAC ashore will be transferred to the NIPS located in the JIC aboard ship.

- Data base files for the MAGTF headquarters TCO and the senior GCE FSCC will be entered into the TCO and MIFASS elements of Shipboard MTACCS aboard the ATF flagship, if the ship is so equipped. Until Shipboard-MTACCS MIFASS and TCO are available aboard amphibious ships, printouts of landing force MIFASS and TCO data bases may be used as working documents in the appropriate spaces and as a basis for updating system data bases prior to the assault or after establishment of the systems ashore, as appropriate.

203.2.3 Movement to the Objective Area Phase. During movement to the objective area, Navy C^2 systems may be used to assist with continued planning. Shipboard MTACCS, when available, will be used to support continued planning and the upgrading and refining of data bases. Training on landing

force TDSs, Shipboard MTACCS, and on Navy C^2 systems, available for landing force use, should be conducted and maintenance performed on landing force TDSs.

Communications required for interoperability between systems on different ships of the task force may be limited by emission control (EMCON) restrictions. When EMCON conditions preclude electronic communications between ships, exchange of data between C^2 systems will be by courier-delivered magnetic tape, disk, or printout.

Landing force operations planning during this phase will be carried out in the LFOC. At the present time, AFDS-ASIS on LCCs and ITAWDS-MIS on LHAs may be available to provide limited support. In the future, FDDS, ITAWDS-TIPS, and Shipboard MTACCS MIFASS and TCO will be available to support planning on LCCs, LHAs, LHDs and LPHs. ITAWDS-TIPS will be a much more Marine-friendly, versatile, and useful system than its predecessors.

Supporting arms planning will be carried out in the SACC, working in close coordination with the LFOC and the TACC(N). Automated support for the SACC is currently provided by AFDS-NTDS and -ASIS on LCCs, and ITAWDS-TDS and -MIS on LHAs. In the future, the upgraded ITAWDS-TDS and -TIPS, and Shipboard-MTACCS MIFASS and TCO will be available on LCCs, LHAs, LHDs, and LPHs.

Aviation planning is conducted by the TACC(N) and the HDC working in close cooperation with the LFOC and SACC. Currently automated assistance is provided by AFDS-NTDS and -ASIS on LCCs, and ITAWDS-TDS and -MIS on LHAs. In the future, the upgraded ITAWDS-TDS and -TIPS will be available on LCCs, LHAs, LHDs, and LPHs.

Currently, intelligence planning is supported in the intelligence center by AFDS-NTDS and -ASIS, and by NIPS on LCCs. On LHAs, intelligence planning is supported by ITAWDS-TDS and -MIS, and by NIPS. In the future, the JIC on LCCs, LHAs, and LHDs will be supported by FDDS, the upgraded ITAWDS-TDS and -TIPS, and an improved NIPS. SIGINT planning is supported by use of Navy systems within the ship's signals exploitation space (SSES) such as the Combat Cryptologic Support Console (CCSC), the Tactical Receive Equipment (TRE), the Tactical Intelligence Subsystem (TACINTEL) of the Navy UHF Satellite Communications (SATCOM) System and other systems.

For those ships that will have the Shipboard-MTACCS PLRS master station, PLRS library and map tapes can be completed during this time, if they have not been completed during the planning phase. Forward-deployed MAGTFs can use this time to good advantage to review or to prepare library and map tapes to support contingency and exercise plans.

Landing force administrative and logistic functions and planning will be supported by ADPE-FMF/EUCE. Support by the DFASC or the MASC will not be available aboard ship. Limited support may be available from AFDS-ASIS on LCCs, or ITAWDS-MIS on LHAs. The more Marine-friendly ITAWDS-TIPS should prove to be of more assistance than ASIS or MIS.

During movement to, and on arrival at the AOA, data bases will be updated based on information provided by an advance force, if employed, and by related supporting operations conducted by other fleet and theater forces prior to the

arrival of the ATF in the AOA. Supporting and pre-assault operations designed to isolate the objective area; to assist in gaining and maintaining air, ground, or naval supremacy; and to secure information by air, surface, submarine, or special operations will yield information requiring the updating of data bases and possibly the changing of plans. Automated systems will aid in the rapid processing of information provided by these sources and in the timely modification of plans, if required.

203.2.4 Rehearsal Phase. The rehearsal phase is that phase of an amphibious operation in which one or more exercises are conducted by an amphibious task force or its elements under conditions approximating those of the contemplated operation. It is executed in accordance with a plan that approximates the plan for the contemplated operation.

Staff rehearsals, in the form of command post exercises, in which ATF and LF command and control systems, including tactical communications, can be exercised; and integrated rehearsals, stressing control in the execution of the ship-to-shore movement, communications, and interoperability of TDSs for the assault, are conducted when feasible.

Marine Corps TDSs and supporting communications should be exercised during rehearsals to test the validity of plans for their employment and the operational readiness of equipment and operators. The rehearsal provides an opportunity to determine weaknesses in plans and operational readiness, and to take timely corrective action.

After the fielding of PLRS, and to the extent feasible, all PLRS user units should be tested to ensure that they are operable. The transfer of control from the Shipboard-MTACCS PLRS aboard the ATF flagship to an alternate master station on another ship and to LF PLRS ashore should be practiced both as a planned transfer of functions and as an unplanned transfer because of a master station failure.

After MIFASS and TCO have been incorporated into Shipboard MTACCS, the harmonious interoperation of the MIFASS and TCO terminals located in the LFOC, SACC, and flag plot should be thoroughly tested.

Marine Corps TDS and Shipboard-MTACCS interoperability should be tested during rehearsals to include:

- Shipboard-MTACCS PLRS with FDDS.
- Shipboard-MTACCS PLRS with the ship's navigation system and NAVSTAR GPS, when the latter system is installed.
- Shipboard-MTACCS PLRS and MIFASS and TCO with each other.
- Shipboard-MTACCS PLRS, MIFASS, and TCO with MTACC systems aboard other ships and ashore as required.

ATF and LF TDSs and AISs will be used to assist with the preparation of rehearsal plans in the same manner as they are employed in the preparation of operation plans. It may be necessary to prepare separate PLRS map and library

tapes for the rehearsal area. The library tape for the actual operation should be suitable for rehearsal use with only minor modifications.

203.2.5 Assault Phase. The assault phase begins when the main body of the amphibious task force arrives in assigned positions in the AOA, and terminates when the ATF mission has been accomplished. The following typical sequence of events in the assault and concomitant transition of LF C^2 facilities ashore provides a framework on which to base the concept of employment of the C^2 systems.

- With the lifting of EMCON restrictions the tactical flag command center (TFCC) on LCCs and flag plot on LHAs and LHDs become fully operational. The LFOC on the ATF flagship also becomes fully operational.

- CATF SACC becomes operational and coordinates and controls supporting arms. Airborne observers/controllers are operational. The combat information center (CIC) controls the ship-to-shore movement. The TACC(N) and HDC control close air support and assault support aircraft.

- Assault rifle companies and supporting arms observers/controllers are ashore. Preplanned scheduled fires are replaced by call fires and requests for close air support. Coordination is accomplished at the requesting unit or referred to the SACC for resolution if necessary.

- Infantry battalion COCs and FSCCs are established ashore. Direct support artillery batteries/battalions are established ashore FDCs are operational. In MAU-level operations, the BLT headquarters will normally be the senior command established ashore. The MAU headquarters is normally supported from its seabase with the MAU headquarters, ACE, and MAU service support group (MSSG) normally remaining aboard ship.

- General support artillery units are established ashore. Infantry regiment FSCCs and COCs are operational ashore. The initial element of the artillery regiment headquarters may be established ashore. MAB operations may be supported from a seabase, facilities ashore, or a combination of the two. The MAB, ACE, and brigade service support group (BSSG) headquarters may remain aboard ship or be established ashore as the situation dictates.

- Division COC, FSCC, and DASC are established ashore. Initial elements of the TAOC are established ashore. Artillery regiment headquarters is established ashore. The DFASC or MASC will be established ashore and operational.

- MAF headquarters is established ashore. TACC(M) and TAOC are established. TACC(M) will initially function as tactical air direction center (TADC) under the direction of the TACC(N).

Navy and Marine Corps communications supporting TDSs are activated when radio silence is lifted, usually just prior to H-hour, unless the ATF concept of operations provide for the landing to be made under conditions of radio

silence and other EMCON restrictions; i.e., a "silent landing." The low probability of intercept of PLRS, Have Quick, and the Single Channel Ground and Airborne Radio System (SINCGARS) frequency-hopping, VHF/UHF, cryptographic-secure transmissions may provide an acceptable means of communication in an otherwise "silent landing." When fielded, the NAVSTAR GPS and the SUNS will further improve the capability to make silent landings. Once PLRS is activated, and if PLRS reference units have been established ashore or afloat, PLRS PLI will be available to all PLRS-equipped units, landing craft, amphibious vehicles, and aircraft from the time the assault is launched. Relay units may be required for effective PLRS operation, depending on ship-to-shore standoff distances. Airborne relays may be the most effective method of meeting this requirement. If reference units cannot be established prior to landing the assault waves, high priority will be assigned to establishing them in the beach and landing zone areas as early as possible. The free-text message capability of PLRS is not dependent on the availability of fixed reference units and can be used in the early stages of the assault even if the position location and navigation capabilities of the system cannot be used until reference units are established ashore. When the PLRS-GPS interface is fielded, GPS will provide accurate position location information to PLRS reference units, both static and moving. The problem of accurately locating reference units will be solved. Units equipped with GPS or the GPS-related SUNS will be provided with position location information, world wide, independent of PLRS.

PLI, as it becomes available for PLRS-equipped units, craft, vehicles, and aircraft, will also be available for display on the PLRS display control console (DCC) in the LFOC. When the proposed PLRS-FDDS interface is developed, selected PLRS PLI will be available for overlay on the FDDS large screen display in the LFOC. A PLRS input/output keyboard and printer (AN/UGC-74A(V) 3) is located in the LFOC and in the SACC. When MIFASS and TCO are installed in LCCs, LHAs LHDs, and LPHs, they will have an automated interface with PLRS, and PLRS PLI will be available for display on their dynamic situation displays (DSDs). Until MIFASS and TCO are installed, the PLRS AN/UGC-74A(V)3 in the SACC will be used to obtain printouts of PLRS data.

Landing force PLRS master stations (MSs) and alternate master stations (AMSs) will be established ashore as early as possible, normally not later than the time the direct support artillery battalion and infantry regiment headquarters are established ashore. Their employment must be carefully coordinated with the employment of the Shipboard-MTACCS PLRS and the Army's Enhanced PLRS (EPLRS) when participating in joint operations. For example, in the case of a MAB landing, the Shipboard-MTACCS PLRS initially will function as the PLRS MS. After the MAB PLRS is established ashore, the shipboard system may continue to function as a separate community for the control of aircraft and landing craft, and assisting with the control of operations in the AOA seaward from the beach. The area of responsibility for the MAB PLRS would be the MAB area of operations inland from the beach. See Figure 2-4. As many as five PLRS networks can interoperate without mutual interference. Individual users transmitting PLRS area of responsibility boundaries are automatically passed from one PLRS community to another.

Normally, PLRS assets are not available in sufficient quantity to assign an MS/AMS to support a MAUs. Shipboard-MTACCS PLRS may be able to meet PLI

requirements in MAU-level operations if the ship can operate close enough to the beach or the necessary relays can be established and maintained on a continuing basis, and personnel can be provided to operate the shipboard system on the same basis.

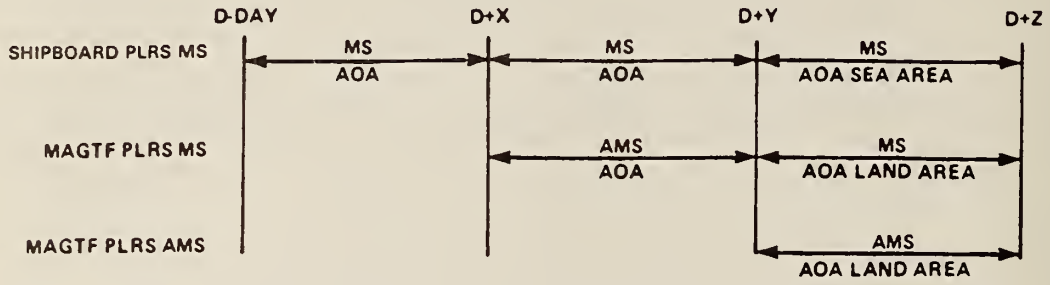

Figure 2-4. Phased Employment of Shipboard-MTACCS PLRS and MAGTF PLRS in the Amphibious Objective Area.

Some of the possible applications of PLRS during the assault phase include:

- Providing guidance for landing craft with PLRS-equipped units or vehicles embarked. Guidance for LCAC and amphibious assault vehicles with PLRS user units installed.
- Providing guidance for helicopters and other PLRS-equipped aircraft.
- Providing accurate, real-time position location information on PLRS-equipped landing force units to C^2 facilities on LCCs, LHAs, LHDs, and LPHs.
- Transmitting short, secure, free-text messages over a jam-resistant digital communication link with a low probability of intercept.
- Establishing and promulgating control and coordination measures; e.g., exclusion zones, corridors, boundaries, coordinated fire lines, and fire support coordination lines.
- Providing land navigation assistance for landing force units ashore.
- Coordinating and controlling link-up operations.
- Inserting and extracting reconnaissance units.
- Identifying an unknown PLRS user unit-equipped unit in a specific area.

When MIFASS and TCO become available, they will be installed in LCCs, LHAs, LHDs, and LPHs. On LCCs, terminals will be located in the TFCC, the

LFOC, and the SACC. On LHAs, LHDs, and LPHs, terminals will be located in the flag plot, the LFOC, and the SACC. Within the landing force, the MAGTF headquarters, division, and MAW headquarters, and infantry and artillery regiment and battalion headquarters will be equipped with suitable MIFASS and TCO suites to support their COCs, FSCCs, FDCs, DASCs, and TACCs, as appropriate. Marine aircraft groups and squadrons and combat service support organizations will be equipped with TCO suites to meet their requirements.

The single most valuable capability of MIFASS and TCO, as initially installed aboard amphibious ships, will be the ability, in conjunction with PLRS, to provide real-time displays of the landing force tactical situation during the assault and subsequent operations ashore. During the assault, the displays will include PLI for PLRS-equipped elements and from other sources, known enemy locations, and battlefield geometry; e.g., control and coordination measures. In the LFOC, these displays, together with information available from FDDS and ITAWDS-TIPS, will provide CLF and his staff with the capability to observe the progress of the landings and operations ashore, to assist in integrating fire support with maneuver of the assault elements, and to direct or otherwise influence landing force actions. As TCO software is developed, the LFOC will attain increased capabilities to produce and disseminate orders and reports more rapidly. FDDS will provide an overall display of ATF operations. ITAWDS-TIPS will provide selected intelligence information from the JIC and will have information available concerning supporting arms, the target list, embarkation and debarkation files, and other files as may be established.

MIFASS and TCO displays in the SACC will be employed in conjunction with ITAWDS-TDS and -TIPS to assist fire support coordination personnel in carrying out coordination and control of supporting arms and the integration of fire support with maneuver of the landing force and other naval operations. MIFASS and TCO will provide the only automated display in the SACC capable of presenting an integrated display of landing force operations, including PLRS PLI and battlefield geometry.

MIFASS and TCO in the TFCC or flag plot will provide CATF with an integrated graphic display of landing force PLI and battlefield geometry supplemented by an alphanumeric text as appropriate. The TFCC/flag plot terminal will function as an information exchange terminal with the operator able to call up selected information for display as desired.

When radio silence is lifted, MIFASS and TCO terminals will have communication with MIFASS and TCO terminals on other ships and with landing force elements as they are established ashore. While the ATF ships are at extended standoff distances, 25 miles or more at sea, communications will be limited to high frequency (HF) radio; UHF satellite; extremely high frequency (EHF) Single-Channel Objective Tactical Terminal (SCOTT); JTIDS, if available; and PLRS, when provided with suitable relays. Very high frequency (VHF) radio may be usable when transmitted via an airborne automatic radio retransmission unit (AUTOCAT) currently under development by the Navy. For operations ashore, CLF may establish VHF retransmission sites.

Prior to and during the initial assault, fire and air support to prepare the landing areas and to support the initial assault are provided in

accordance with preplanned schedules controlled by the SACC and TACC(N). As supporting arms observers, spotters, and controllers land with the assault units and supporting arms liaison officers (LNOs) land with the assault BLT command groups, prearranged scheduled support is replaced by requests for fire support and close air support. These requests are transmitted via HF request nets directly to the agency controlling the supporting arm requested; e.g., surface fire support ship or TACC(N). Coordination is accomplished at the supported unit level with final coordination and control at the CATF SACC or TACC(N), as required and appropriate. The guiding principle is that the exercise of control of fire and close air support and their final coordination is accomplished at the lowest echelon with the means and capability for effecting the necessary control and complete coordination of the mission in question. As successive levels of MAGTF command are established ashore, the ability of the landing force to effect required coordination and control at the lower echelons is developed. When the senior GCE FSCC and DASC are operational ashore, CATF normally will pass responsibility for fire support coordination and specified aspects of control to CLF. These responsibilities are normally carried out by the senior GCE FSCC and DASC and the ACE TACC and TAOC.

Low altitude air defense (LAAD) teams land with assault BLTs and other units in accordance with the LF task organization. Initially, control of the LAAD teams is exercised by the LAAD battery or detachment commander from the SACC communicating over the HF LAAD weapons control net, and from the senior GCE FSCC after that agency is established ashore. A TAOC (TAOM) will be landed as early as possible, usually by the time the senior GCE FSCC and DASC of a MAF or MAB are established ashore. The TAOC with its associated radar will function initially as an air defense early warning station, extending the ATF early warning capabilities landward. As additional TAOMs are landed, the TAOC will monitor and then take over responsibility as the landward sector anti-air warfare coordinator (SAAWC), when CATF passes this responsibility to CLF. The TAOC may eventually be given overall responsibility for air defense in the AOA.

As expeditionary air facilities are established ashore, a Marine air traffic control squadron (MATCS), or detachments thereof, will provide limited en route and terminal air control services. The MATCS exercises control in assigned areas in accordance with airspace control procedures established by the airspace control authority together with indigenous national agencies if appropriate. Automated systems employed by the MATCS include the MATCALS and MRAALS.

Radio battalion direct support units land with the units for which they provide support. Automated support for intelligence functions at infantry regiments and battalions and other similar size units will be provided by TCO when that system becomes available. MAGIS IP and IIF, or the ASIP that will replace them, if those systems have been assigned to the MAGTF, will be phased ashore with the MAGTF or ACE headquarters. TERPES will also be phased ashore with the ACE headquarters if the MAGTF is supported by a detachment from the VMAQ. Automated intelligence support for MAB and MAU headquarters, if they are established ashore, will be provided by TIMS and TCO when those systems becomes available. An IAC will not normally be deployed with a MAGTF of less than MAF size.

203.3 Subsequent Operations

203.3.1 Joint and Combined Operations. MAGTFs may be deployed for operations as part of a naval task force, a joint task force (JTF), or a combined task force. JCS Pub. 2, Unified Action Armed Forces (UNAAF), other JCS publications, LFMs, and FMFMs set forth the principles, doctrines, and functions governing activities and performance when two or more Services, or elements thereof, are assigned to joint operations. A combined operation is an operation conducted by forces of two or more allied nations acting together for accomplishment of a single mission. There is no universally accepted doctrine for the conduct of combined operations. However, doctrine applicable to a particular theater may be available; e.g., standardization agreements (STANAGs) for NATO nations. From a C^2 point of view, the most significant change that takes place with the termination of an amphibious operation and the continuation of operations ashore is the transfer of command, control, and coordination responsibilities from CATF to CLF and also usually to a joint or combined headquarters ashore.

A major step in achieving interoperability required for successful joint and combined operations has been the development and use of interoperability message and circuit standards. The Marine Corps participates in joint Service and NATO programs for establishing and maintaining these standards and is implementing them in the development of TDSs.

In other than air operations and air control functions, C^2 systems interoperability requirements can, and for the near future most commonly will, be met through manual interfaces and the use of joint- and NATO-approved message standards and standard terminology.

No facet of joint or combined operations poses stricter requirements for close, rapid coordination and control than air operations. In NATO, air defense, and to a lesser degree, air support are accomplished through agencies of the NATO Air Defense Ground Environment (NADGE). NADGE consists of air defense and control equipment, facilities, and personnel charged primarily with the air defense of NATO against air threats. NADGE uses organic sensors and communications systems to employ interceptor aircraft and surface-to-air missiles as the primary means against the threat. The Link 1/TADIL A or TADIL B buffer provides the interface between MACCS and NADGE. The interface can be made over assault cable, lease line, or HF radio. The required interoperability has been designed into the MACCS. The Tactical Data Communications Central, AN/TYQ-3A, and the Tactical Air Operations Module, AN/TYQ-23, provide the required communications. The ATACC will also include the required interfaces. The AN/TYQ-23(V)1 will replace the AN/TYQ-3A that is used as an element of the TAOC. Both of these systems provide the TADILs required for coordination and control of air operations in joint and combined operations as well as for internal C^2 functions. TADIL A links the TACC and TAOC with ITAWDS-NTDS/TDS, Airborne Tactical Data System (ATDS), the Air Force Airborne Warning and Control System (AWACS), and Air Force control and reporting centers/control and reporting posts (CRCs/CRPs). TADIL B provides the data link between the Marine Corps TACC/TADC, CATF's TACC(N)/TADC(N), the Air Force Tactical Air Control System (TACS), and the Army air defense command post (AADCP). NATO Link-1 provides for data exchange between MACCS and NADGE air defense operation centers (ADOCs), sector operations centers (SOCs), command

reporting centers (CRCs), and with NATO tactical air operations centers. A Class 2H JTIDS module will be integrated with the AN/TYQ-23 and the ATACC in the mid 1990's providing communications via TADIL J with other TADIL J-capable OPFACs.

Communications for joint operations are in accordance with pertinent JCS publications; Joint Army, Navy, Air Force Publications (JANAPs); and service doctrine. The Joint Communications Support Element (JCSE) provides communications support for JTF headquarters and augments or provides contingency and emergency communication support to meet critical operational and support needs of the JCS, the Services, the Defense Agencies, and commanders of unified and specified commands. Interoperability requires careful, detailed advance planning to ensure compatibility of communication systems and equipment. Communications in combined operations are in accordance with Allied Communications Publications (ACPs), STANAGs, and Service practices.

203.3.2 Amphibious Withdrawals. An amphibious withdrawal is a withdrawal of forces by sea in naval ships or craft from a hostile shore with the purpose of disengaging the forces for employment elsewhere. It is an amphibious assault in reverse. Planning follows much the same process as for the assault except that time for planning may be more limited and the planning process abbreviated. During the withdrawal, command, control, and coordination facilities ashore are progressively withdrawn with their functions and responsibilities being passed from CLF to CATF as the withdrawal progresses. TDSs will facilitate planning and execution of the withdrawal by helping to speed the planning process and providing timely information required for control and coordination of the withdrawal.

CHAPTER III
MARINE CORPS TACTICAL DATA SYSTEMS (TDSs)

300 INTRODUCTION

As stated in section 102, the objective of Marine Corps TDS programs is to provide Fleet Marine Force Commanders with the C^2 means to cope with the increased tempo and complexity of the modern battlefield. This requires the use of integrated systems that can automatically receive, process, display, and distribute information.

300.1 Marine Corps Operational Requirements. Marine air-ground task forces with associated amphibious assault shipping, naval surface fire support (NSFS) ships, and other fleet support, make up the amphibious portion of the nation's general-purpose forces. Such diverse elements as assault landing craft and vehicles, helicopter-borne and ground maneuver forces, NSFS ships, artillery and mortar units, Navy and Marine Corps fighter and attack aircraft, surface-to-air missile (SAM) systems, and logistic support activities must be coordinated with precision and speed. The requirement to effectively integrate the employment of these assets guides the development of the Marine Corps TDSs.

300.2 System Descriptions and Program Summaries. This chapter describes Marine Corps TDSs and summarizes their acquisition programs. It includes those systems generally categorized as:

- The Marine Corps Tactical Command and Control Systems (MTACCS).
- The Marine Air-Ground Intelligence System (MAGIS), which is a subset of MTACCS.
- The Marine Air Command and Control System (MACCS).
- Other TDSs not included in one of these three categorizations.

300.2.1 Marine Corps Tactical Command and Control Systems. MTACCS currently consists of the:

- Position Location Reporting Systems (PLRS), AN/USQ-90.
- Tactical Air Operations Module (TAOM), AN/TYQ-23(V)1.
- Marine Air-Ground Intelligence System (MAGIS).
- Marine Integrated Fire and Air Support System (MIFASS), AN/UYQ-38(V).
- Tactical Combat Operations (TCO) System.

- Tactical Warfare Simulation, Evaluation, and Analysis System (TWSEAS).

300.2.2 Marine Air-Ground Intelligence System. MAGIS, a subset of MTACCS, includes the following existing and developmental systems:

- Intelligence Analysis Center (IAC), AN/TYQ-19.
- Imagery Interpretation (II) Segment, AN/TYQ-12(V)2.
- Imagery Processor (IP) Segment, ES-40A.
- Tactical Electronic Reconnaissance Processing and Evaluation System (TERPES), AN/TSQ-90(V).
- Integrated Signals Intelligence System (ISIS), to consist of a Stand-Alone Analysis Subsystem (SAAS), and a Communications Collection Outstation (CCO).
- Joint-Source Imagery Processor (JSIP) that will replace the IIF and IP.
- Tactical Intelligence Management System (TIMS).
- Other systems described in section 305.

300.2.3 Marine Air Command and Control System. MACCS includes the following TDSs:

- Tactical Air Command Central, AN/TYQ-1. The Advanced Tactical Air Command Central (ATACC) will replace the AN/TYQ-1 and the AN/TYQ-3A applications in the tactical air command center (TACC).
- Tactical Air Operations Central, AN/TYQ-2.
- Tactical Data Communications Central (TDCC), AN/TYQ-3A.
- Tactical Air Operations Module (TAOM) AN/TYQ-23(V)1, that will replace the AN/TYQ-2 and AN/TYQ-3A applications in the tactical air operations center. The TAOM is also one of the systems included in the MTACCS concept.
- Marine Air Traffic Control and Landing System (MATCALS).
- Marine Remote Area Approach and Landing System (MRAALS).
- Advanced Tactical Air Command Central (ATACC) that will replace the AN/TYQ-1.
- The Operations Central AN/TSQ-122 configured as a direct air support center (DASC) and the Improved DASC (IDASC), AN/TSQ-155(V) that will replace it.
- Radar Set, AN/TPS-32.

- Radar Set, 3D, AN/TPS-59.
- Radar Set, AN/TPS-63.
- Radar Bomb Directing Set (RBDS), AN/TPB-1D.
- Hawk Battery Control Center (Hawk BCC), AN/TSW-13.
- Hawk Platoon (assault fire unit) Command Post (Hawk PCP), AN/MSW-18.

300.2.4 Other Marine Corps Tactical Data Systems. Other Marine Corps TDSs discussed include:

- Battery Computer System (BCS), AN/GYK-29.
- Radar Set, Firefinder, AN/TPQ-36.
- Field Artillery Meteorological Data System (FAMDS), AN/TMQ-31.
- Modular Universal Laser Equipment (MULE), AN/PAQ-3.
- Backup Computer System (BUCS) Special.
- Small Unit Navigation System (SUNS).

The depth of detail contained in the descriptions varies because of differences in the complexity of the systems and their present state of development or use. Information provided in the systems descriptions is not intended to be exhaustive in detail, but to provide a useful summary of each program and an overall understanding of the Marine Corps concept for employment of TDSs. Additional detail is contained in appropriate acquisition documentation and other reference materials associated with individual programs. Systems descriptions contain the following information:

- Statement of the requirements.
- Concept of employment.
- System description.
- Acquisition strategy.
- Acquisition schedule.
- Personnel and training.
- Program documentation.

300.3 Concept of Employment. Some TDSs described in this chapter are currently in use in the FMF. Others will be fielded in the next 15 years. The basic concept of employment for each system is documented in the required operational capability (ROC) statement issued when system development begins. During the development and initial operating phases, the concept of employment may be modified. To some degree, systems use may vary as they are introduced in order to exploit capabilities of fielded systems, while waiting for others to be introduced. Concepts of system employment are described in chapter II.

301 MARINE INTEGRATED FIRE AND AIR SUPPORT SYSTEM (MIFASS), AN/UYQ-38(V)

301.1 Requirement. The Marine Corps requires a supporting arms control and coordination system to meet Marine air-ground task force (MAGTF) mission requirements, and to exploit the capabilities of improved weapon, target acquisition, and target designation systems. This requirement will be met by an automated fire and air support control and coordination system with real-time or near-real-time information processing and display capabilities that will make possible more timely, accurate, and effective command, control, coordination, and integration of supporting arms.

MIFASS will enhance the performance of:

- MAGTF headquarters fire support information centers (FSICs).
- Ground combat element fire support coordination centers (FSCCs).
- Artillery fire direction centers (FDCs).
- Aviation combat element DASCs.

Additionally, current Navy and Marine Corps plans provide for the installation of MIFASS or TCO, as appropriate, in the landing force operations center (LFOC), supporting arms coordination center (SACC), and flag plot of Amphibious Assault Ship (Multi-Purpose), LHD 1 Class Ships currently under construction to enhance coordination and control of supporting arms during amphibious operations. Plans also provide for MIFASS to be installed in Amphibious Command Ship, LCC 19 Class, Amphibious Assault Ship (General-Purpose), LHA 1 Class Ships, and in Amphibious Assault Ship (Helicopter), LPH Class Ships in accordance with the Navy Warfighting Improvement Program (WIP).

301.2 Concept of Employment. MIFASS will be employed in accordance with current doctrine as established in LFMs, FMFMs and other appropriate publications. FSCCs, FDCs, DASCs, and FSICs will be equipped with MIFASS.

301.3 System Description. MIFASS is a selectively automated, tactical C^2 system that uses modular equipment, personnel, and associated procedures to control and coordinate direct air support, naval surface fire support, artillery and mortar fire support, and low altitude air defense (LAAD) support to be more effective and responsive to ground maneuver forces. MIFASS is a distributed processing system, in which microcomputers control interactive display devices, manage data bases, perform computational tasks, process digital data, and drive printers to provide records of operator actions and messages. Integral to the functions of MIFASS-equipped centers are the decisions made by operational personnel; e.g., choice of weapons, amount and type of ordnance, and aircraft routings. MIFASS interoperates with other C^2 systems to provide rapid digital dissemination of fire planning, fire support coordination, tactical and technical fire direction, air support and direction, air defense, and battlefield information to enhance the employment of supporting arms. Artillery firing batteries will be equipped with the AN/GYK-29 BCS and the Backup Computer System (BUCS) Special which will enable

them to perform technical fire direction computations. Observers will be furnished with the Digital Communications Terminal (DCT), AN/PSC-2 that will enhance their ability to communicate with MIFASS-equipped centers and fire units.

301.3.1 Functions. The functions of MIFASS are:

a. To control, coordinate, and integrate the employment of supporting arms.

b. To compute firing data for artillery and infantry battalion mortars.

c. To provide automated assistance in the preparation and execution of fire plans.

d. To exercise procedural air control of aircraft operating in the vicinity of ground operations.

e. To collect, display, and maintain records of target intelligence information.

f. To conduct counterfire activities.

g. To prepare reports of supporting arms activity.

h. To provide command post facilities for LAAD personnel.

301.3.2 Modes of Operation. To support various operator positions within MIFASS-equipped centers, each dynamic situation display (DSD) can be operated in several modes. Each mode supports all of the unique requirements in the way of switch actions, displays, and alerts for each type of position. Operational modes are:

a. Supervisory.

b. Fire support processing.

c. Air support processing.

d. Air support direction.

e. Target information processing.

f. Counterfire operations.

g. Fire planning.

h. Fire plan execution.

i. Simulation.

301.3.3 Interoperability. Specific requirements have been established for MIFASS to have automated or semiautomated interfaces with other TDSs. In addition to these established interoperability requirements, MIFASS-equipped centers will be able to exchange information with other operational facilities

(OPFACs) via the interfaces provided by the telephone system and communication centers. Automated and semiautomated interface requirements are described in the following paragraphs.

a. Position Location Reporting System (PLRS). MIFASS will have an automated interface with the PLRS master station to receive position location information (PLI) for PLRS-equipped units, vehicles, aircraft, and landing craft, and to exchange short free-text messages with PLRS-equipped elements. This interface will be provided by a MIFASS-PLRS interface controller (MPIC), which will be a MIFASS software function. PLRS PLI will be provided to TCO- and TAOM-equipped centers from MIFASS.

b. Tactical Air Operations Module (TAOM). MIFASS will have an automated interface with the AN/TYQ-23 TAOM from which it will receive aircraft PLI derived from radars and external sources supporting the TAOM. The TAOM will receive PLI for PLRS-equipped aircraft from MIFASS.

c. Advanced Field Artillery Tactical Data System (AFATDS). MIFASS will have automated or semiautomated interfaces with AFATDS and the AFATDS-compatible systems listed below. Initially, these interfaces will be manual level 2 or level 3.

- Firefinder Radar Set, AN/TPQ-36.
- Field Artillery Meteorological Data System, AN/TMQ-31.
- Battery Computer System, AN/GYK-29.

d. Tactical Combat Operations (TCO) System. MIFASS will have an automated or semiautomated interface with the TCO system. TCO will receive PLRS PLI from MIFASS.

e. Integrated Tactical Amphibious Warfare System - Tactical Data Systems (ITAWDS-TDS). MIFASS will have an automated or semiautomated interface with the Navy ITAWDS-TDS.

f. Advanced Tactical Air Control Central (ATACC). MIFASS, in the DASC configuration, will have a voice/data link interface with the ATACC.

g. Unit Level Message Switch (ULMS). The ULMS will provide the interface between MIFASS-equipped centers and the communication system over which most MIFASS digital message traffic will be transmitted.

h. Digital Communications Terminal (DCT). The DCT will provide a user terminal for digital message entry and readout of MIFASS and other TDS messages. It will fulfill the MIFASS requirement for a hand-held, input/output device for use by forward observers, FAAD teams, reconnaissance teams, forward air controllers, and NSFS spotters.

i. Tactical Warfare Simulation Evaluation, and Analysis System (TWSEAS). MIFASS will have an automated interface with TWSEAS. The details of this interfaces remain to be determined. It will probably be implemented through the MIFASS simulation and training mode to be developed as a preplanned product improvement (P3I).

301.3.4 Major Items of Equipment. MIFASS-equipped OPFACs will be provided with suites of equipment tailored to meet their requirements. Major components are described in the following paragraphs. Table 3-1 summarizes the physical characteristics of system hardware. Functional requirements, as established in the MIFASS required operational capability (ROC) document, for maneuver battalion MIFASS terminals are currently being reevaluated. The Objective of the reevaluation is to ensure that the maneuver battalion terminal will meet validated functional requirements within acceptable size, weight, and power constraints. A smaller and lighter terminal may be able to meet maneuver battalion requirements better than most of the hardware described in the following paragraphs.

301.3.4.1 Dynamic Situation Display Set (DSD), AN/USQ-89. The DSD is capable of presenting alphanumeric data and a graphic representation of a ground tactical situation. The display will consist of standard military map symbols, geographic reference features, position location information, indirect-fire weapon gun-target lines, aircraft flight profiles, and control and coordination lines. The operator will be able to control the type and quantity of information displayed, to receive information changes, and to view graphics and textual material simultaneously. Operators will interact with the data base through a keyboard and by direct interaction with the graphic display; e.g., touch-sensitive display panel. Figure 3-1 is a picture of a MIFASS DSD.

301.3.4.2 Communications Control Panel (CCP), C-11386/UYQ-38(V). The CCP will allow an operator to control remotely and to monitor any combination of voice high frequency (HF), very high frequency (VHF), or ultra high frequency (UHF) nets available at the panel. The operator will also be able to control different local telephone lines, monitoring any combination of lines available at the panel. Audible and visible signals alert the operator to incoming telephone and intercommunication system calls. A visible signal will alert the operator to incoming traffic on a radio circuit being monitored.

301.3.4.3 Printers. MIFASS will have two kinds of printers. The Printer Type 1 (T1P), TT-802/UYQ-38(V) produces a single copy of formatted messages normally sent to or received from a DCT. The T1P will print at least 40 characters per line, at a speed of at least 60 lines per minute. The Printer Type 2 (T2P), TT-803/UYQ-38(V) will be used at echelons above the battalion for longer, more complex messages, such as the target list, air tasking orders, and aircraft availability reports. The T2P will be capable of printing at least 80 characters per line at 1200 lines per minute. Both the T1P and T2P can be operated on battery power.

301.3.4.4 Microcomputers (MCs). The MIFASS MC is the Microcomputer, CP-1617/UYQ-38(V), a modified AN/AYK-14 MC. The CP-1617 drives the DSDs and printers, processes digital messages, performs technical fire direction computations for artillery and mortars, executes all other system programs, and provides for the generation of reports. Ancillary requirements include provisions for system initialization in both start-up and restart modes, self-testing of hardware and software functions, and an executive program for input/output operations, system utility routines, and data base maintenance. The CP-1617

Table 3-1. Physical Characteristics of Equipment Developed for the MIFASS Engineering Development Model

UNIT	ACRONYM	POWER (WATTS)	WEIGHT (LBS)	VOLUME (FT^3)	SOURCE PROGRAM
DYNAMIC SITUATION DISPLAY	DSD	202	123.9	2.95	MIFASS
ELECTRONICS UNIT	EU		68.4		
DISPLAY UNIT	DU		55.5		
COMMUNICATIONS CONTROL PANEL	CCP	8	28.7	0.57	MIFASS
TYPE 1 PRINTER	T1P	6	17.8	0.39	MIFASS
TYPE 2 PRINTER	T2P	15.9	40.7	0.96	MIFASS
DIGITAL COMMUNICATIONS TERMINAL	DCT	INTERNAL 9-VOLT BATTERY	3.8	.05	DCT
MIFASS COMPUTER	MC	277.8	53	0.87	MIFASS
MASS MEMORY UNIT	MM	21.2	39	0.68	MIFASS
MASS STORAGE UNIT	MSU	16	28.6	0.62	MIFASS
DIGITAL COMMUNICATIONS INTERFACE	DCI	55	59.7	1.26	MIFASS
POWER MODULE	PM	1400	51.8	1.04	MIFASS
BATTERY BOX	BB	110	57	0.59	MIFASS

*(as of July 82)

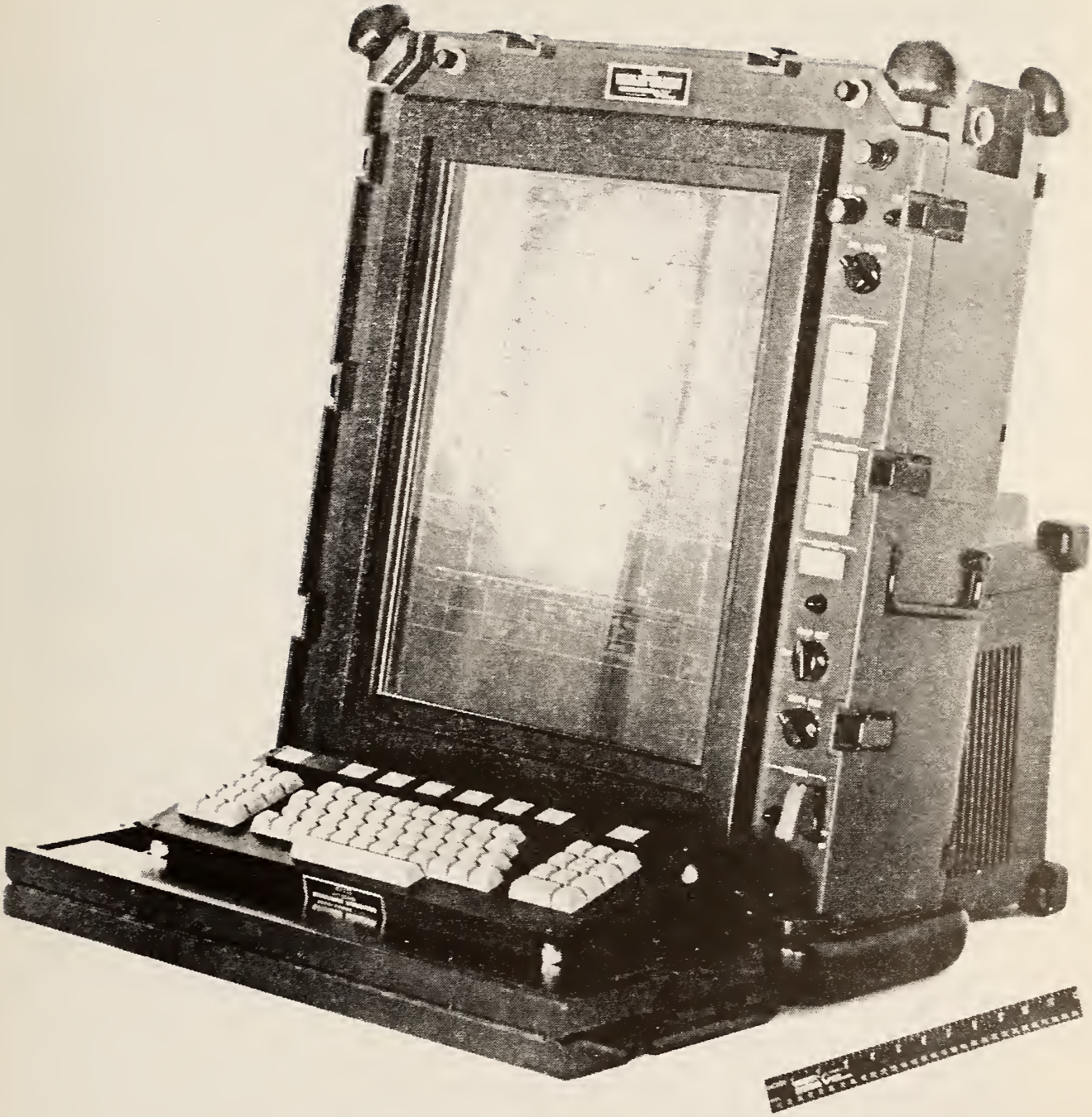

Figure 3-1. MIFASS Dynamic Situation Display (DSD)

is capable of accepting and executing programs that use the full range of input/output devices.

301.3.4.5 Auxiliary Memory Devices. These devices will be employed at the MIFASS-equipped centers to augment the main memory capacity of the microcomputers. The MC memory will be supplemented by a Mass Memory Unit (MM), MU-813/UYQ-38(V). The MU-813 provides auxiliary memory to store data and programs that exceed the storage capability of the microcomputers. It will be a high-speed, high capacity, on-line device. The Mass Storage Device (MSD) MU-815/UYQ-38(V), will be a replaceable tape memory to provide for long-term storage of historical files and other bulk data.

301.3.4.6 Digital Communications Interface Equipment (DCE), J-4150/UYQ-38(V). The J-4150 will provide for communications access and protocol formulation. It includes the hardware interfaces and communication security (COMSEC) devices required to ensure secure, reliable communications. It includes those microprocessors and other hardware devices that are functionally devoted to interfaces with external communications systems. It includes:

- Buffers.
- Modems.
- Encryption devices. (In shipboard installations, cryptographic devices are located in the ship's communication technical control space.)

The DCE will be a part of all MIFASS suites and provides the capability for:

- Twelve wideband single channel (WBSC), half-duplex (HDX) circuits, that can form six full-duplex (FDX) point-to-point links with information rates on HDX lines of 300, 600, 1200, or 1600 bits per second (bps) and 600, 1200, or 1600 bps on FDX links.
- One intercenter net.
- Fifteen DCT/voice circuits using any mix of HF, VHF, or UHF radios, each servicing up to 15 DCTs using a "netsense" multiple access protocol and with information rates of 300, 600, 1200, or 1600 bps.
- One local DCT net.
- Optional trunk interfaces for two PLRS radios and one TAOM Tactical Digital Information Link B (TADIL B).

MIFASS digital data messages are developed in a MIFASS microcomputer as a result of switch actions taken at a DSD or through automatic message generation in response to other stimuli; e.g., completion of a processing routine or receipt of certain messages. The messages thus generated are formatted by the communication access protocol (CAP) routines of the

appropriate DCE or interface processor. An adjunct to the DCE includes the cryptosecurity interfaces to employ ancillary cryptographic devices on data lines.

Communication equipment with which the DCE will provide an interface for MIFASS include the ULMS, WBSC radio, the unit level circuit switch (ULCS), and the center's DCT networks, described in subsequent paragraphs.

301.3.4.6.1 Unit Level Message Switch (ULMS), AN/GYC-7. The ULMS will serve as a message switch for MIFASS- and other TDS-equipped centers at the infantry regiment, artillery battalion, and higher headquarters. The ULMS provides a capability to switch real-time and near-real-time digital data. Where an ULMS is not collocated with a MIFASS-equipped center, a dedicated, point-to-point trunk in the multichannel radio system will connect the center with the ULMS at the next higher headquarters as a long local. For technical control purposes, these trunks may be routed through the ULCS at each node. However, they will be "patched through" and not placed in a circuit-switched mode. Alternatively, the trunk can be run directly to the main distribution frame.

301.3.4.6.2 Wideband Single-Channel (WBSC) Radio. The required MIFASS information exchange capability can be provided best through a multichannel transmission system and associated message and circuit switch network. In the absence of multichannel communications, a dedicated, point-to-point, full-duplex, WBSC radio link can be established between MIFASS-equipped centers to handle the required traffic. Since each such full-duplex WBSC link requires four radios (two at each end) and two operating frequencies, only a limited number of such links can be supported simultaneously.

301.3.4.6.3 Unit Level Circuit Switches (ULCS), AN/TTC-42 and SB-3865. MIFASS-equipped centers may communicate through the ULCS to pass voluminous traffic such as may be required when updating or initializing a center. Chapter V provides additional details concerning the ULCS.

301.3.4.6.4 Digital Communications Terminal (DCT), AN/PSC-2. The DCT will serve as a device for sending and receiving messages from MIFASS. Messages prepared in MIFASS microcomputers are formatted in a protocol compatible with the DCT. Chapter V provides details concerning the DCT.

301.4 Acquisition Strategy. The Marine Corps Tactical Command and Control Systems (MTACCS) Test Division at Camp Pendleton, California developed the initial MIFASS definition. The MIFASS ROC, system description document (SDD), and detailed requirements document (DRD) provided the necessary technical data for the Naval Electronics Systems Command (NAVELEX) (now the Space and Naval Warfare Systems Command (SPAWARS)), the principal development activity (PDA), to prepare the system specification and request for proposals for the contract definition (CD), and engineering development model (EDM) contracts. After evaluation of CD proposals submitted by Hughes Aircraft Company and Norden Systems Division of United Technologies, a full-scale engineering development (FSED) contract was awarded to Norden in September 1979.

During the performance of the FSED contract--a period of approximately 7 years--technical representatives of the PDA have interacted with the acquisition coordinating group (ACG) and contractor personnel to resolve issues of cost, schedule, and performance. Hardware and software design reviews have been performed with specialists drawn from the Marine Corps Development and Education Command (MCDEC), naval laboratories, and naval systems commands.

Because of slippage in the EDM production, a Chief of Staff's Committee In-Progress Review (IPR), conducted in December 1981, approved continued development of the MIFASS EDM with the deletion or deferral of certain originally planned elements of the program. Deferrals include:

- TADIL B TAOM interface.
- TACFIRE interface.
- Airborne DASC capability.
- Naval Tactical Data Systems (NTDS) interface.
- Shipboard center capability.
- Partial fire planning capability.
- Partial fire plan execution capability.
- Partial ULMS workaround.
- Software Simulation Capability.

Deletions included:

- Special weapons predictions.
- Radar Course Direction Central (AN/TPQ-27) interface.
- Thermo-Electric generator procurement.
- Automatic allocation of air assets to mission and target capability.

Subsequent to operational test (OT II) of the EDM and the Marine Corps Systems Acquisition Review Council acquisition decision (MSARC III), deferred capabilities that are still desired will be reinstated as preplanned product improvements. Additional testing will be conducted concurrent with hardware production.

The Marine Corps plans to procure MIFASS equipment for three active MAFs and one reserve MAF, plus a MAF-equivalent compliment for training, maintenance float, and other support functions. The acquisition strategy includes competition at the subassembly level for initial production and system-level competition for subsequent production. The initial production contract award is scheduled for FY89.

The operational life of MIFASS is expected to be about 10 years. Systems will be a refurbished between the fourth and sixth year of operational use.

301.5 Acquisition Schedule. Significant events in the MIFASS acquisition schedule are:

Event	Date
Program initiation, Milestone I, MSARC I	Sep 72
Special MSARC	May 76
Milestone II, MSARC II	Feb 77
CD phase RFP released	Nov 77
CD phase contracts awarded	Aug 78
Special MSARC	Aug 79
EDM contract award Sep 79	
Special IPR	Dec 81
Special IPR	May 82
Assistant Commandant of the Marine Corps Decision Memorandum	Jun 83
Developmental Test II	Nov 81 - Dec 86
Operational Assessment	Dec 86 - Apr 87
Milestone IIIA, Marine Corp Program Decision Meeting (MCPDM)	Aug/Sep 87
OT II	Jan 88 - May 88
Milestone IIIB, MCPDM II	Aug 88
Production contract award	Dec 88
Initial Operational Capability (IOC)	FY92

301.6 Personnel and Training Requirements

301.6.1 Personnel Requirements. Operator requirements for MIFASS will depend on the organization and doctrine adopted for system employment. Requirements for operation within the current organization and doctrine or within the FASC concept will be determined on completion of OT II. Initial estimates indicate that some personnel savings may be realized over that required using the current manual system.

Organizational maintenance will be performed at the using unit by MIFASS operators. No additional personnel will be required to perform organizational maintenance. The operator will isolate the failed item by using built-in self-test features of MIFASS. The failed item will be exchanged using spare items stocked locally. The failed item will then be evacuated to the

force service support element or depot, as appropriate, for repair. Additional personnel will be required for maintenance of MIFASS at the force service support group and depot levels.

Initial analyses indicate that personnel presently assigned to occupational fields 08, 25, 40, 59, and 72 possess the basic skills required for operation and maintenance of MIFASS. However, they will require technical training on the system. Officers will require training as MIFASS operators and system controllers. Additional military occupational specialties (MOSs) have been proposed for personnel so trained. New primary MOSs have been proposed for enlisted personnel trained as operators and maintenance technicians.

301.6.2 Training. Individual training will be accomplished at formal Marine Corps schools and at FMF units. The Communications-Electronics School at Marine Corps Base, 29 Palms, California, will train a cadre of operators for each MAF prior to the MAF receiving its MIFASS equipment. The school-trained cadre, using a program of instruction and training aids provided the Communications-Electronics school, will train other MIFASS operators after the MAF receives its MIFASS equipment. Unit training will be supported by the MIFASS software simulation capability. These routines will allow for construction of operational scenarios and the alteration of scenario inputs during exercises in response to operator actions. Maintenance technicians will require a specialized course of instruction to perform 3rd- and 4th-echelon maintenance at the force service support group (FSSG). The maintenance technician course will be conducted by the Communications-Electronics school. Norden Systems will conduct initial training for Communications-Electronics School personnel, depot maintenance technicians, and MCTSSA software maintenance personnel.

301.7 Documentation

Document	Date
Advanced Development Objective (ADO) No. CC 1.07X - DPO	16 Apr 73
MIFASS Communications Requirements/Analysis - MCTSSA	29 Apr 75
MIFASS ROC No. CC 1.07 - Development Project Officer (DPO)	12 Aug 75
Design Alternatives to the MIFASS - Marine Corps Tactical Systems Support Activity (MCTSSA)	12 Dec 75
MIFASS Acquisition Evaluation - NAVELEX	23 Dec 75
Tactical Data Systems Communications Loading - MCTSSA	15 Apr 76
Acquisition Decision Memorandum: Special MSARC Review of MIFASS - DC/S, RD&S	29 May 76

MIFASS System Description Document (SDD) - MCTSSA	24 Aug 76
MIFASS Shipboard Operation Analysis - Hughes Aircraft Co.	Sep 76
MIFASS Personnel Requirements Study - MCDEC	Oct 76
MIFASS Cost and Operational Effectiveness Analysis - Marine Corps Operations Analysis Group (MCOAG)	Nov 76
MIFASS Integrated Logistic Support (ILS) Management Plan - Acquisition Project Officer (APO)	Dec 76
MIFASS Letter of Adoption and Procurement (LAP) Part I, Revised - APO	10 Dec 76
MIFASS Detailed Requirements Document w/Changes 1&2 of 2 (Dec 77, 17 Nov 78) - MCTSSA	21 Mar 77
MSARC II Acquisition Decision Memorandum (ADM) - Deputy Chief of Staff (DC/S), Research, Development, and studies (RD&S)	15 Apr 77
Request for Proposals, MIFASS Contract Definition Phase - NAVELEX	4 Nov 77
MIFASS Test and Evaluation Master Plan, Preliminary Draft - DPO	Apr 78
MIFASS DT-II Detailed Test Plan - MCDEC	20 Sep 78
MIFASS Acquisition Plan - DPO	22 Feb 79
MIFASS ROC No. CC 1.07A, Revised - DPO	25 Jul 79
Acquisition Decision Memorandum, Special MSARC - DC/S, RD&S	21 Sep 79
MIFASS Integrated Logistics Support Plan, Revision B - Norden Systems	15 Jul 80
Acquisition Decision Memorandum, In-Progress Review	14 Jan 82
MIFASS Contract Specification, Engineering Development Model (EDM), NAVELEX-M-296E w/Addendum I of 25 May 1983	15 Jan 82
Acquisition Decision Memorandum, In-Progress Review	24 Jun 82
MIFASS Program Modifications Decision Memorandums for Modification of the Program and for Revision of EDM Operational Test Requirements	3 Jun 83

Document	Date
Top Level Requirements Document for Implementation of MIFASS in Current Organization and Procedures, Report No. 2154-R-1013, Revision A - Norden Systems	15 Dec 83
Commandant of the Marine Corps (CMC) ltr PONP-12A34, Subj: Concept of Employment of Marine Corps Tactical Command and Control Systems in LHD 1 Class Ships	9 Nov 84
MIFASS Draft ROC No. CC 1.07B, DPO	5 Sep 85
Assistant Commandant of the Marine Corps (ACMC) Committee Meeting Minutes	Oct 85
Director, Marine Corps Operational Test and Evaluation Activity (MCOTEA) Ltr, Subj: MIFASS OT-II Detailed Test Plan	16 Dec 85
ACMC Committee Meeting Minutes	Mar 86
Space and Naval Warfare Systems Command (SPAWAR) Acquisition Plan No. 86-21, Marine Integrated Fire and Air Support System	21 Apr 86
MIFASS Work Directive C00036X - DC/S, RD&S	Revised Annually

302 TACTICAL COMBAT OPERATIONS (TCO) SYSTEM

302.1 Requirement. The Marine Corps requires a data input, storage, retrieval, and processing system to support of G-3/S-3 operational functions and G-2/S-2 intelligence functions in units from the MAGTF headquarters level down the battalion and squadron levels. This support is required by ground combat, aviation combat, combat support, and combat service support units. The capability to receive, process, assimilate, and distribute large quantities of information on a real-time or near-real-time basis is required to perform C^2 functions on the modern battlefield.

302.2 Concept of Employment. TCO will be employed within the existing force structure described in the Marine Corps Mid-Range Objectives Plan (MMROP) to support C^2 functions pertaining to combat operations. TCO suites of equipment will be located in the operations centers of the following organizations:

- MAGTF headquarters (MAF and MAB).
- Divisions.
- Infantry regiments.
- Infantry battalions.
- Artillery regiments.
- Artillery battalions.
- Reconnaissance battalions.
- Assault amphibian battalions.
- Tank battalions.
- Engineer battalions.
- Light armored vehicle battalions.
- Marine aircraft wing headquarters.
- Tactical air command center.
- Marine aircraft groups.
- Marine air control groups.
- Marine wing support groups.
- All Marine aircraft and other squadrons.
- Combat service support element logistic operations centers.
- Combat service support elements through the battalion level.

302.3 System Description. TCO will be a multi-user, interactive, secure, automated tactical command and control system that will be the focal point for operational and intelligence information within supported combat operations centers (COCs). It will provide an improved capability for receiving, processing, storing, retrieving, displaying, summarizing, and disseminating selected information in support of planning and execution of combat operations. TCO is currently undergoing reevaluation and redefinition.

302.3.1 Functions. TCO will provide automated or semiautomated support for the execution of the following functions.

a. Planning, coordinating, and supervising the tactical employment of ground combat, aviation combat, combat support, and combat service support units.

b. Controlling and evaluating the current combat situation.

c. Receiving, maintaining, and displaying the real-time status of the current tactical situation of interest to the commander for his area of responsibility and interest.

d. Determining priorities for the tasking of personnel and the allocation of material.

e. Preparing and distributing reports, requests, and orders.

f. Exchanging operational information with other Services and joint headquarters during operations.

302.3.2 Modes of Operation. TCO will provide commanders with automated planning operations, and tactical intelligence handling assistance. TCO modes of operation have not been defined.

302.3.3 Interoperability. While all TCO interfaces have not been precisely defined, some specific requirements have been established for automated and semiautomated interfaces with other TDSs. In addition, TCO-equipped centers will be able to exchange information with other OPFACs via the interfaces provided by the telephone system and communication centers. Currently defined automated and semiautomated interface requirements are described in the following paragraphs.

a. Marine Integrated Fire and Air Support System. TCO will interoperate with MIFASS. TCO will receive PLRS PLI from MIFASS. The MIFASS-TCO interface will be automated.

b. Marine Air-Ground Intelligence System - Intelligence Analysis Center. TCO will have a semiautomated interface with the MAGIS IAC at the MAGTF headquarters level if the MAGTF is supported by an IAC. The interface will require a physical break to meet security requirements.

c. Other Services and Countries. TCO will support interoperability standards to permit exchange of information with C^2 centers of other Services and countries, as required by the program for Joint Interoperability of Tactical Command and Control Systems (JINTACCS) of the Joint Tactical Command, Control, and Communications Agency (JTC^3A).

d. Navy Tactical Data System/Airborne Tactical Data System. TCO will employ JINTACCS interface standards in a semiautomated interface with the Naval Tactical Data System (NTDS) and the Airborne Tactical Data System (ATDS).

e. Digital Communications Terminal. The DCT will be the primary I/O device for units below battalion level to exchange information with TCO.

f. Unit Level Message Switch. The ULMS will provide the interface between TCO-equipped centers and the communication system over which most TCO digital message traffic will be transmitted.

g. Tactical Warfare Simulation, Evaluation, and Analysis Systems (TWSEAS). TCO will interoperate with TWSEAS.

302.3.4 Major Items of Equipment. TCO equipment is to be determined.

302.4 Acquisition Strategy. A TCO advanced development objective (ADO) was approved in April 1973 and a ROC in 1978. A system description document was published in March 1981. Based on a Norden engineering study, completed in June 1981, it was determined that TCO could be successfully built using 95 percent of the MIFASS hardware and 65 percent of the software as a baseline. A 1982 MIFASS in-progress review decided further analysis of TCO requirements was needed. A TCO redefinition conference was called in September of that year. The conference recommended that TCO be reduced in scope and that it be developed as an extension of MIFASS. Based on these recommendations, a TCO test bed was initiated to redefine TCO requirements. The test bed used the Army V Corps Staff Planning and Decision Support (SPADS) System as a baseline. The Test bed became operational at I MAF in November 1985 with the objective of validating those functions requiring automated assistance by TCO. A revised TCO ROC will be published in 1987. TCO will rely primarily on non-developmental software and hardware. Integration software, as required will be developed using the Ada computer language.

302.5 Acquisition Schedule. Significant events in the TCO acquisition program and the dates on which they took place, or for which they are planned are:

Event	Date
Program initiation, ADO-issued	5 Apr 73
CG, MCDEC recommended redefinition of TCO	2 Dec 82
Requirements validation with SPADS test bed	Nov 85 - 86
Revised ROC to be issued	FY87
MCPDM II	FY87
TCO software development	Jul 87 - Feb 88
OT II	Apr - Jul 88
IOC	FY90

302.6 Personnel and Training Requirements

302.6.1 Personnel Requirements. Operator and maintenance personnel requirements for TCO will be contingent on the redefinition and validation of the functional requirements now in progress. Operators will normally be from

occupational fields normally assigned to operations centers. New MOSs for TCO-qualified operators may be required for manpower management identification purposes. The maintenance concept will minimize additional personnel requirements.

302.6.2 Training. Individual training will be accomplished at formal Marine Corps Schools and FMF units. Maintenance technicians will be trained by the Communication-Electronics School. Initial training for maintenance of TCO software will be conducted by the TCO system prime contractor.

302.7 Documentation

Document	Date
Advanced Development Objective (ADO) No. CCC-1.03X, Tactical Combat Operations System (TCO) - CMC	16 Apr 72
ROC No. CCC-1.31, for a Tactical Combat Operations System - CMC	7 Aug 78
TCO Acquisition Plan - DPO	Nov 79
TCO System Description Document (SDD) - MCTSSA	9 Mar 81
CMC ltr CCA/APC:PMB, 5340: Automated Support for Aviation Command and Control Functions	19 Dec 80
CG, MCDEC ltr D103/RJC:llg, 3900: Redefinition of the Tactical Combat Operations System	2 Dec 82
CMC ltr PONP-12A34, Subj: Concept of Employment of Marine Corps Tactical Command and Control Systems in LHD 1 Class Ships	9 Nov 84

303 POSITION LOCATION REPORTING SYSTEM (PLRS), AN/USQ-90

303.1 Requirement. The Marine Corps requires a system to provide FMF commanders with real-time, accurate, three-dimensional position location and navigation information. This capability is required in all intensities of conflict by units down to the platoon, patrol, and individual aircraft levels. The system must provide PLI to system users and specified command and control systems, and must not be constrained by geographic location or environmental conditions. PLRS is a joint U.S. Army-U.S. Marine Corps project. It is also being procured by the U.S. Navy for use in connection with amphibious assault shipping and landing craft.

303.2 Concept of Employment. PLRS information is available to all PLRS user-unit-equipped elements and to MAGTF commanders to assist with maneuver control, fire support coordination, conflict avoidance, and other C^2 functions.

There will be two distinct phases of PLRS employment during its life cycle. The first phase encompasses the time interval from the fielding of PLRS until the fielding of MIFASS, TAOM, TCO, and other developmental TDSs. During this phase, PLRS will be employed as a stand-alone system. The second phase will commence with the fielding of the new C^2 systems. During this phase, PLRS will function as an integral part of MAGTF C^2 systems.

PLRS is organized and employed in networks, each designed to support a MAB or an RLT. As PLRS production systems are fielded, PLRS will be employed in multiple-system networks to support MAF-level operations. When properly coordinated, as many as five PLRS networks can interoperate, without mutual interference.

The technique employed by PLRS to locate and track the position of system users is multilateration. When the ranges between a given unit and three other previously located units are known, the position of the given unit can be calculated in two dimensions. If the altitude of the given unit is known, a unique position solution in three-dimensional space is provided. The use of more than three ranging measurements for a unit increases the accuracy of location to within a few meters.

The range between two PLRS units is determined at the measuring unit by recording the time-of-arrival of a burst transmission sent at a known time by the unit to be located. The range of the receiver from the transmitter can be determined mathematically.

PLRS processing takes place in a synchronized network. Each user unit has its own time-base generator, which is synchronized with a primary timing source in the PLRS master station. Each unit in a PLRS network is assigned one or more timeslots during which only it transmits, while other selected units receive. Specific receiving units are automatically assigned to mark and record time-of-arrival measurements, which are subsequently passed to the master station at designated times. The master station employs this time data

in multilateration calculations. Four time-of-arrival measurements may be stored by each user unit. The frequency of time slot assignments to a particular user is controlled at the master station based on the user's specific requirements and the number of user units in the network. An airborne unit, because of its more rapid movement, will be assigned more timeslots than a manpack unit.

During its assigned timeslots, the master station transmits commands and information to user units. Each user unit is assigned certain functions to be performed during its assigned timeslot, such as reporting previously received time-of-arrival and altitude measurements, relaying messages received from another unit, or providing other system data on request. All burst signals appear to be identical, with the result that the message portion of the burst transmission, whether it is a time-of-arrival report, a reply to a query, a request for information, or other message types, has the same structure and cannot be distinguished from any other signal without having a PLRS-like receiver and cryptographic key.

Full system performance can be provided over a 47 kilometer square primary operating area. Airborne users can be tracked up to an altitude of 50,000 feet with a 300 kilometer square extended operating area. Manpack and surface-vehicle unit locations will be accurate within a circular error probable of not more than 15 to 30 meters. Airborne unit locations will be accurate to within a circular error probable of 25 to 100 meters within the primary operating area and 100 to 200 meters in the extended operating area.

Tactical units will frequently be employed beyond the line-of-sight of the master station. Since PLRS operates in the UHF band of the radio frequency spectrum, it is necessary that every user unit in the network be able to serve as an automatic relay to allow inclusion of those remote users not within line-of-sight of the master station. When many units are deployed over a broad area, up to four levels of relay are available to establish paths between remote users and the master station. Each user unit may be assigned by the master station, as necessary, to perform as a relay. Figure 3-2 depicts a PLRS network formed through the use of the automatic relay capability of user units. All user units in direct line-of-sight contact with the master station serve as A-level nodes. Those connected to the master station through one A-level node as a relay are at the B-level. The highest relay node accommodated by the system is the D-level. Therefore, a user unit at the D-level uses A-, B-, and C-level relay nodes to communicate with the master station.

To tie PLRS to the military grid reference system, it is necessary to have a minimum of three units for which accurate military grid reference coordinates are known and can be entered into the PLRS system as reference units. These accurately located reference units become reference points and form the base from which all other locations are determined. In order to achieve and maintain the desired accuracy of location of all user units in the network, additional reference units located throughout the area of operation are required. The usual number ranges from six to ten additional units. Normally, reference units must be in fixed positions. However, a lower level of accuracy may be available and acceptable with a dynamic base; i.e., when

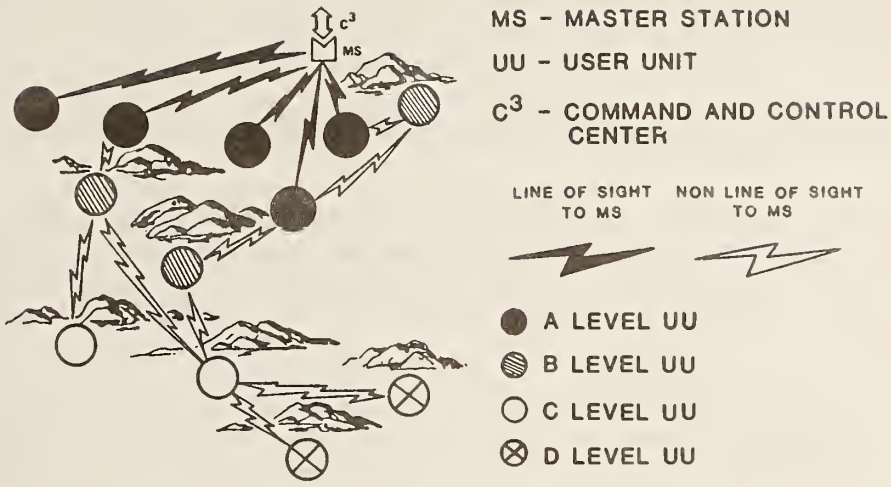

Figure 3-2. PLRS Coverage Using Relays

the reference units are not stationary. The development of the PLRS-NAVSTAR GPS automated interface is expected to make it possible to achieve acceptable levels of position location accuracy with a dynamic reference base.

Developmental Bulletin 1-87, Position Location Reporting System, provides a detailed concept of employment. Section 203.2 of this plan also provides additional details concerning employment of PLRS in amphibious operations and subsequent operations ashore.

303.3 System Description. A PLRS system consists of a master station, housed in a mobile shelter, a duplicate alternate master station, and up to 370 active user units, which may be man, vehicle, or aircraft transported. PLRS is cryptographically-secure and jam-resistant.

303.3.1 Functions. The functions of PLRS are:

a. Providing position location, identification, and navigation information on PLRS user unit-equipped elements to the PLRS master station and interoperable C^2 systems.

b. Providing PLRS user unit-equipped elements with their military grid reference position location, with the position location of other specified user units, and with designated locations such as checkpoints, objectives, or landing zones.

c. Providing a requestor with the range and bearing to a specified location, the nearest restricted zone, predesignated locations, or another user unit with a specified military identification.

d. Providing airborne or surface users with guidance through multi-legged corridors to avoid danger areas or for traffic control. Aircraft can receive continuous updates of the range and bearing to a specified destination.

e. Providing a PLRS user with his heading and speed or with the heading and speed of another user.

f. Transmitting short free-text messages between the PLRS master station and user units, between user units, or to an interoperable C^2 system. The low probability of intercept of PLRS frequency-hopping, UHF, crypto-secure transmissions may provide an acceptable means of communicating in an otherwise "silent landing."

g. Providing for the establishment of up to 10 five-sided exclusion zones with an automatic alert to user unit-equipped elements that approach such a zone.

h. Providing users with the military identification of an unidentified user located at a specific set of grid coordinates or at a specified range and bearing from the interrogator.

i. Providing user units with the ability to store up to 10 messages that have been received and/or that are to be sent.

j. Providing a simulation program that can be used to train master station operators.

303.3.2 Interoperability. Specific requirements have been established for PLRS interoperability with selected TDSs.

a. Marine Integrated Fire and Air Support System (MIFASS). MIFASS will have an automated interface with PLRS from which it will receive PLI for PLRS-equipped units, vehicles, aircraft, and landing craft, and through which it can exchange short free-text messages. This interface will be provided by a MIFASS-PLRS interface controller (MPIC), which will be a MIFASS software function. PLRS PLI will be provided to TCO-equipped centers and TAOM-equipped TAOCs from MIFASS. Until MIFASS is fielded, PLRS PLI will be available to COCs by use of a PLRS user unit, or by teletypewriter printout from the master station, or from an SST Keyboard Printer, AN/UGC-74 remoted from the PLRS master station.

b. Navigation System Using Timing and Ranging Global Positioning System (NAVSTAR GPS). An automated interface between PLRS and NAVSTAR GPS is being developed. This interface will facilitate the accurate location of PLRS reference units by freeing them from geographic constraints, and make possible the effective employment of PLRS with dynamic reference units. The IOC for the PLRS-GPS interface is planned for 1991.

c. Shipboard Marine Corps Tactical Command and Control Systems. PLRS is being installed in LHD 1 Class ships as those ships are being built. When they become available, MIFASS and TCO also will be installed in LHDs. The Navy's Warfighting Improvement Program provides for the installation of Shipboard MTACCS; i.e., PLRS, MIFASS, and TCO; in LCC, LHA, and LPH Class ships.

(1) Shipboard installations of PLRS will interoperate with MIFASS, TCO, and NAVSTAR GPS as those systems are installed in amphibious ships.

(2) The AN/SSQ-82(J) Multiplex Unit for Transmission Elimination (MUTE) is a Navy system capable of monitoring and controlling all permanently installed radio frequency and acoustic transmitters aboard Navy ships. Its purpose is to provide centralized control and monitoring of all shipboard radiating systems in order to be able to rapidly assume an EMCON posture on all shipboard transmitters. The PLRS command response unit (CRU) will be modified to provide a dedicated connector for an interface for MUTE input and output signals. This interface is not for data exchange in the sense of the JINTACCS definition of an interface, but is an electronic interface/connection that provides the EW supervisor in the ship's combat information center (CIC) with the capability to monitor and control PLRS transmissions emanating from the ship when EMCON conditions dictate.

(3) An interface is currently being explored between PLRS and the AN/UYQ-88(V) Flag Data Display System (FDDS), for the purpose of enabling PLRS PLI to be displayed on the FDDS large screen display in the landing force operations center (LFOC) and possibly, also on the large screen display in flag plot. Initially, the PLRS to FDDS interface on the first ship of the LHD1 class will be manual.

d. Army Data Distribution System (ADDS). PLRS will interoperate with ADDS.

e. Tactical Warfare Simulation, Evaluation, and Analysis System (TWSEAS). PLRS will have an automated interface with TWSEAS. How the interface is to be implemented has not yet been defined.

303.3.3 Major Items of Equipment. A complete AN/USQ-90 Position Location Reporting System consists of two van-mounted AN/TSQ-129 Master Stations (MSs), a direct support team vehicle (DSTV), and up to 370 individual user units.

a. Master Station. Each PLRS Master Station, AN/TSQ-129 is contained within a standard Marine Corps S-280 shelter, weighs approximately 5,600 pounds, and is transportable by 5-ton truck or helicopter. One of the MSs will function as the primary MS; the second as an alternate MS (AMS) to provide for continuing operation during displacement of the MS or in event of loss of the MS resulting from enemy action or equipment failure. The MS exercises complete control over a PLRS network through computer programs within an AN/UYK-7 and two AN/UYK-20 computers, transmitter/receiver, and input/output devices. The MS performs all location and navigation calculations, maintains and constantly updates the PLRS net structure, and

maintains communications between users and the MS. The MS contains a display control console (DCC) for use as a system monitor and maintenance tool. The DCC is capable of displaying all position location information available from the system. The primary function of the DCC is to permit the operator to manage the network. The second MS, employed as the AMS, is so designated that it can assume the role of the MS, in event of a catastrophic failure of the MS, in approximately six minutes. Power is provided by a 30 kW, 3-phase, 60 Hz, 208/220 volt mobile electric power source or other sources meeting these requirements.

b. Direct Support Team Vehicle. The DSTV is a modified standard electronic shop, equipped with the necessary facilities for on-site performance of second-, third-, and limited fourth-echelon maintenance. It is normally deployed with the MS.

c. User Units. User units (UUs) are available in five different configurations:

- Manpack unit (MPU)--Radio Set, Manpack, PLRS, AN/PSQ-4 (Figure 3-3).
- Surface Vehicle Unit (SVU)--Radio Set, Vehicle, PLRS, AN/VSQ-1 (Figure 3-4).
- Airborne Units (AUs) in two configurations: Radio Set, Airborne, PLRS, AN/ASQ-177(V)1 (AFU) for fixed-wing aircraft and Radio Set, Airborne, PLRS, AN/ASQ-177(V)2 (ARU) for rotary-wing aircraft (Figure 3-5).
- Auxiliary Ground Unit (AGU)--Radio Set, Ground, PLRS, AN/GRC-210 (Figure 3-6).

The UU is a solid-state, militarized transceiver unit weighing 22-1/2 pounds when configured as an MPU and with two batteries. It is equipped with the logic, timing, and circuitry necessary to receive and respond to MS-generated command messages. It is capable of operating with a user readout device or a pilot control display panel for the display of position location, navigation, or other information. With only power supply and antenna variations, the UU may be installed in surface vehicles and fixed-wing or rotary-wing aircraft by means of special mounting kits. AGUs will be deployed primarily as relay stations and reference units.

303.4 Acquisition Strategy. PLRS has completed developmental and operational testing of the full-scale engineering development model, and an initial production contract has been awarded to Hughes Aircraft Company for a total of eleven and one-half systems, of which the Marine Corps will receive six and the Army five and one-half. The Marine Corps will achieve an IOC in the 2nd quarter of FY 1987.

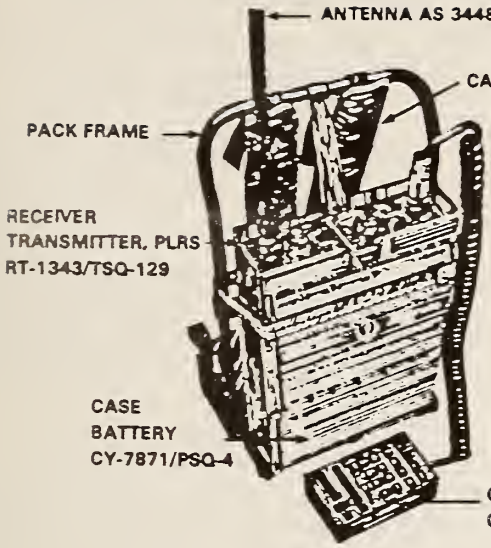

Figure 3-3. Manpack Unit

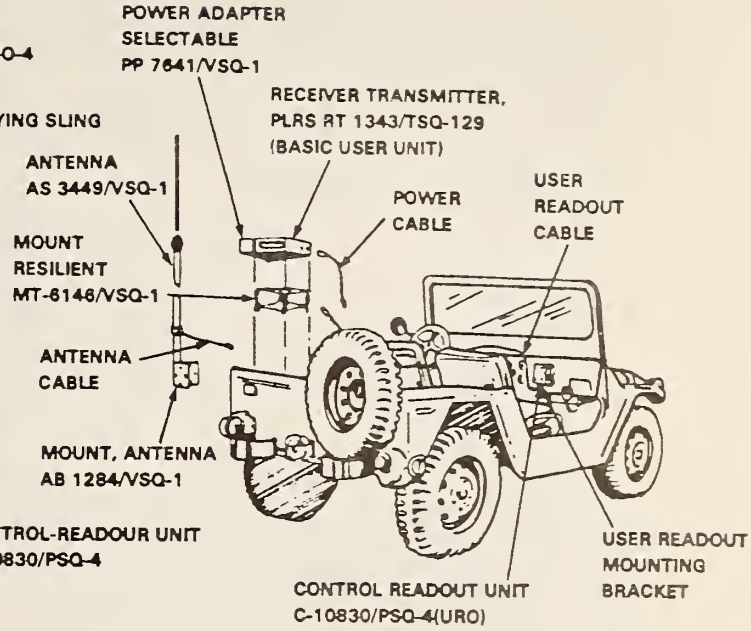

Figure 3-4. Typical Surface Vehicle Installation.

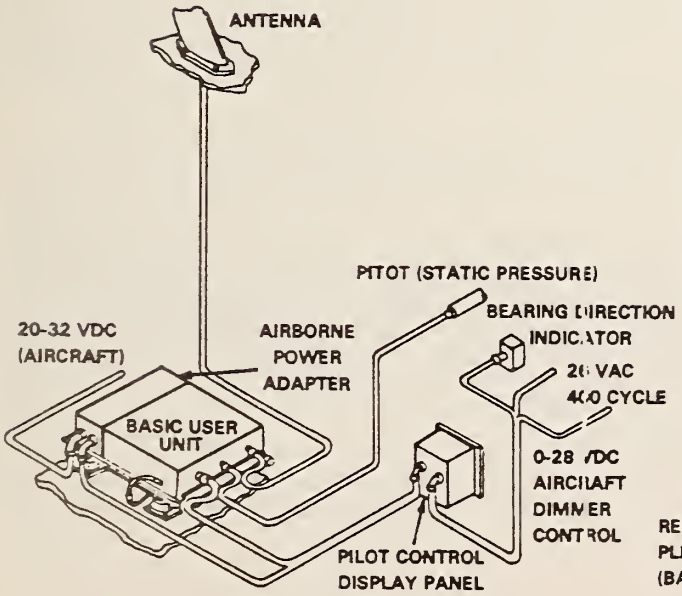

Figure 3-5. Fixed or Rotary Wing Aircraft Installation

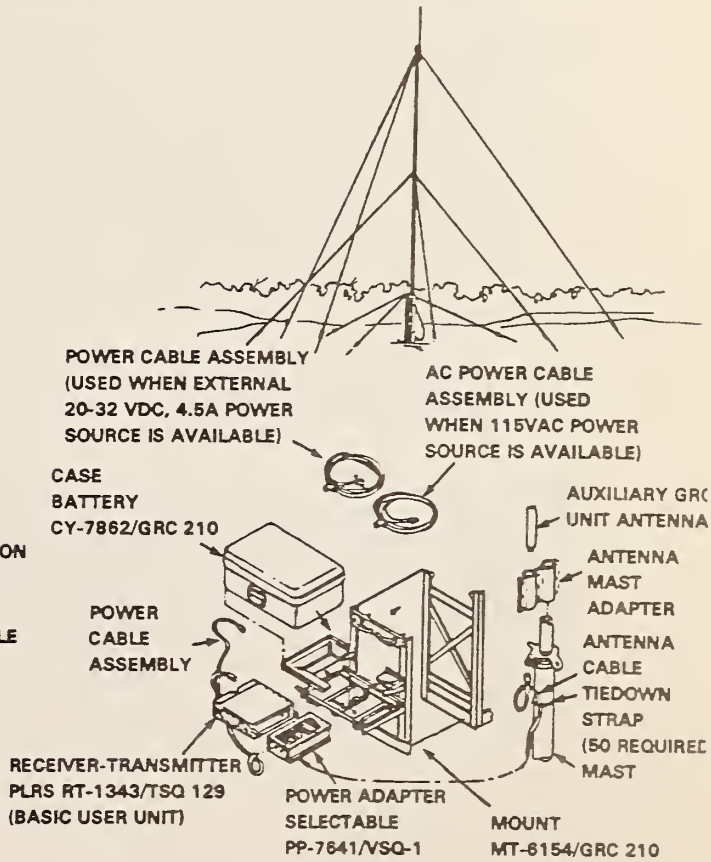

Figure 3-6. Auxiliary Ground Unit

Follow-on production should occur in the 1987-1990 time frame with production for the Marine Corps of seven more PLRS. The Marine Corps will then have twelve complete systems in the FMF and a thirteenth system employed in a training and software support role. During this phase, an upgrade of the MS computers is planned along with a reduction in the size and weight of the MS.

303.5 Acquisition Schedule.

Event	Date
PLRS SOR published	10 Nov 71
Contract awarded for two system validation models	Jul 73
DT I	Mar -Sep 75
U.S. Army-U.S. Marine Corps letter of agreement approved	Mar 76
MSARC II	Mar 76
JSOR published	Aug 76
EDM contract awarded to Hughes Aircraft Co.	Aug 76
DT II/OT II	Apr 81 - Jan 82
MSARC III	Jul 82
Initial production contract	Jul 83
PLRS verification unit test	Oct 83 - Mar 86
First article test	Sep 86 - Mar 87
PLRS-MIFASS testing	Nov 86 - Mar 87
IOC for I MAF	Jul 87
Follow-on Test & Evaluation (OT III)	Feb 88
Follow-on production	1988 - 1992

303.6 Personnel and Training. Production PLRS master stations and ancillary equipment, when fielded, will be assigned to the PLRS platoon, communication company, headquarters battalion, Marine division, FMF. The platoon will be organized into three PLRS teams. The platoon will consist of one officer and approximately 30 enlisted operator and maintenance personnel. Table 3-2 depicts the proposed organization of the platoon.

Table 3-2. Organization of PLRS Platoon, Communication Company, Headquarters Battalion, Marine Division, FMF

Billet Description	Rank	MOS	Marines Officers	Marines Enlisted
Platoon Commander/PLRS Officer	Lt	2502	1	
PLRS Team Leader	SSgt	2537		3
PLRS Operator	Sgt	2531		6
PLRS Operator	Cpl	2531		12
PLRS Maintenance Technician	SSgt	5977		3
PLRS Maintenance Technician	Sgt	2861		3
PLRS Maintenance Technician (Repairman)	Cpl	2841		3
Total			1	30

Manpack, surface vehicle, and auxiliary ground units will be assigned to division and force service support group units as indicated in Table 3-3. Operator personnel are provided from existing personnel assets; no additional personnel are provided to operate or maintain the user units except for four PLRS maintenance technicians who will be added to the electronics maintenance company of the force service support group and will constitute the PLRS maintenance section.

Airborne PLRS user units will be assigned to aviation units as indicated in Table 3-3. Pilots of aircraft equipped with PLRS airborne units will be trained to operate the system. No formal school is envisioned. Aircraft wing communication/navigation technicians will locate faulty lowest replaceable units using built-in-test, and remove and replace them for exchange with the intermediate maintenance activity of the headquarters and maintenance squadrons of the various Marine aircraft groups. The intermediate maintenance activities will remove and replace user unit lowest replaceable items for exchange at the force service support groups. No additional personnel are provided to maintain the user units.

Master station operators will receive initial training in a formal course of instruction to be conducted by Hughes Aircraft Company. Course length will be four weeks beginning March 1987. User unit operators will be trained by on-the-job training.

Maintenance personnel for PLRS will be radio technicians (MOS 2861s and 2841s) and tactical general purpose computer technicians (MOS 5977s). Maintenance training for the user units will initially be conducted by Hughes. Course length will be two weeks, beginning April 1987. Maintenance training for the master station will initially be conducted by Hughes. Course length will be eight weeks, beginning April 1987. Maintenance training for the PLRS test set will initially be conducted by Hughes. Course length will be four weeks, beginning March 1987.

Table 3-3. PLRS Equipment Distribution

MARINE DIVISION (Based on Second MARDIV)	USER UNITS
Headquarters Bn, Marine Div.	11 (Plus 1 AGU)
Reconnaissance Bn	17 (Plus 3 AGU)
Combat Engineer Bn	12
HQ Co, Infantry Regt	6 (Plus 2 AGU)
Infantry Bn	15 (Plus 2 AGU)
Light Armored Vehicle Bn	49 (Plus 3 AGU)
Tank Bn	32 (Plus 1 AGU)
Assault Amphibian Bn	44
HQ Btry, Arty Regt	1 (Plus 1 AGU)
Direct Support Bn, Arty Regt	4 (1 per Battery)
General Support Bn, Arty Reg (Towed)	4 (1 per Battery)
General Support Bn, Arty Reg Reg (Self-Propelled)	3 (1 per Battery)
General Support Bn, 8", Self-Propelled	3 (1 per Battery)
MARINE AIRCRAFT WING	
Marine Attack Squadron (AV-8)	20
Marine Heavy Helicopter Squadron	16
Marine Medium Helicopter Squadron	12
Marine Light Helicopter Squadron	24
Marine Observation Squadron	18
Marine Attack Helicopter Squadron	24
FORCE SERVICE SUPPORT GROUP	
Headquarters and Service Bn	10 (Plus 2 AGU)
Landing Support Bn	6
Motor Transport Bn	6
Engineer Support Bn	2
Maintenance Bn	119 (Operational Readiness Float (ORF))
FORCE UNITS	
Force Reconnaissance Co	7 (Plus 1 AGU)
Radio Bn	20

303.7 Documentation

Document	Date
PLRS Technical Development Plan - Naval Electronics Systems Command	28 Jul 70

SOR No. CC7.1 for PLRS - Development Project Officer (DPO)	10 Nov 71
Contracts awarded for two service validation models (SVMs) - NAVELEX	Jul 73
Advance Procurement Plan - NAVELEX	19 Sep 75
Cost and Operational Effectiveness Analysis - Marine Corps Operations Analysis Group (MCOAG)	22 Jan 76
Joint U.S. Army/U.S. Marine Corps Memorandum of Agreement - HQMC	8 Mar 76
Acquisition Plan for PLRS - CG MCDEC	Apr 76
Joint U.S. Army/U.S. Marine Corps Development Plan for PLRS - PLRS Joint Program Office (JPO)	27 Apr 76
Acquisition Decision Memorandum, MSARC II - DC/S, RD&S	9 Jul 76
PLRS Coordinated Test Plan II - PLRS JPO	23 Jul 76
JSOR for PLRS - PLRS JPO	22 Sep 76
PLRS EDM System Technical Description - Hughes Aircraft Co.	9 Feb 77
Joint Integrated Logistic Management Plan - PLRS JPO	7 Nov 77
Joint Test Design Plan - PLRS JPO	11 Nov 77
Joint Integrated Logistic Support Plan (JILSP) - PLRS JPO	3 Apr 78
Joint Acquisition Plan - PLRS JPO	15 Oct 79
Detailed Test Plan OT II - Operational Test Project Officer (OTPO)	Jun 80
Acquisition Decision Memorandum MSARC III, Approval for Service Use - DC/S, RD&S	Sep 82
Limited Production Contract - NAVALEX	29 Jul 83
Advance Logistic Order - Acquisition Project Officer	17 Apr 84
Letter of Adoption and Procurement 12-75, Revision 4 - APO	Jul 84
CMC ltr PCNP-12A34, Subj: Concept of Employment of Marine Corps Tactical Command and Control Systems in LHD 1 Class Ships	9 Nov 84

Document	Date
Position Location Reporting System (PLRS) Developmental Bulletin 1-87)	Apr 87
Marine Corps RDT&E Work Directive C0042-X/Position Location Reporting System - DC/S, RD&S	Revised Annually

304 MARINE AIR COMMAND AND CONTROL SYSTEM (MACCS)

MACCS comprises those agencies that support the tactical air commander in the exercise of centralized coordination and supervision of air operations while decentralizing control to subordinate agencies. The systems supporting MACCS agencies are listed in paragraph 300.2.3 and described in more detail in this section. Their general concept of employment as part of the overall Marine Corps command and control systems is discussed in section 203.

304.1 Tactical Air Operations Module (TAOM), AN/TYQ-23(V)1

304.1.1 Requirement. The Marine Corps requires an improved system for command and control of MAGTF air operations. An element of this requirement is for an improved tactical air operations central designed to control:

- An air defense sector.
- Air defense operations, including assigned manned interceptors and surface-to-air missiles.
- Enroute air traffic within the assigned area of responsibility.

The Tactical Air Operations Central AN/TYQ-2 and Tactical Data Communications Central AN/TYQ-3A, currently employed by the tactical air operations center (TAOC), are inadequate to meet the postulated threat in the 1990-2000 time frame. They do not meet projected operational requirements and are rapidly becoming logistically unsupportable. An IOC for the improved system is required in FY90.

304.1.2 Concept of Employment. TAOMs will be employed with associated sensors to constitute a TAOC. The required capabilities of a TAOC are determined by the size of the MAGTF and the nature of the enemy air threat. The ability to expand or reduce the capabilities of a TAOC is provided by using one or more interconnected TAOMs to meet the requirements of the tactical situation depending on the size of the MAGTF supported and air defense/air control requirements.

Up to five OMs may be interconnected through the use of fiber optic cables. Cables of 500 meter length permit the dispersion of OMs for tactical considerations or because of terrain constraints. Radars may be located up to two kilometers from the OM when connected with fiber optic cable. Radar-OM separation of up to 40 kilometers can be achieved through the use of narrowband secure radio links.

Each Marine aircraft wing includes two Marine air control squadrons. Each squadron has the equipment to install a TAOC consisting of up to four TAOMs and supporting sensors.

304.1.3 System Description. The TAOM is a transportable, modular, software-intensive, automated element of an aviation C^2 system. When employed in appropriate numbers and with appropriate sensors, it is capable of controlling

and coordinating the employment of air defense weapons in support of any size MAGTF. A single TAOM is housed in a standard 8'x8'x20' American National Standards Institute (ANSI)/International Organization for Standardization shelter and contains all mission-essential equipment with the exception of search radars, identifi- cation friend or foe (IFF systems), JTIDS module, and prime power equipment. Weight of the OM in the transport mode is 17,500 lbs. Figure 3-7 is a schematic of the TAOM.

304.1.3.1 Functions. Each TAOM provides capabilities for:

a. Accepting target reports generated by search radar and IFF systems.

b. Performing automatic track correlation, acquisition, identification, and weapon selection and assignment.

c. Processing track information, orders, commands, and status information received from other C^2 systems and from controlled weapon systems with digital data link capabilities.

d. Processing input from operator consoles for the entry or modification of stored information and initiating the appropriate action within the TAOM and for transmission external to the TAOM.

e. Displaying on operator consoles the real-time tactical air situation based on all system inputs, manual and automatic. Display information includes both computer-generated graphics; e.g., track symbols, velocity vectors, and map lines; as well as alphanumeric data and radar and IFF video.

Major functions and subfunctions performed by a TAOM are listed in Figure 3-8.

304.1.3.2 Modes of Operation. All TAOM operator console units (OCUs) are identical and can operate in any of the following functional modes:

- Tracking and surveillance.
- Interceptor control.
- Air traffic control.
- Surface-to-air missile control.
- EW coordination.

304.1.3.3 Interoperability. The TAOM will be interoperable with other Marine Corps, other Service, and NATO systems as depicted in Figure 3-9. The TAOM will also have voice communications with the agencies depicted in Figure 3-9 by net radio or telephone.

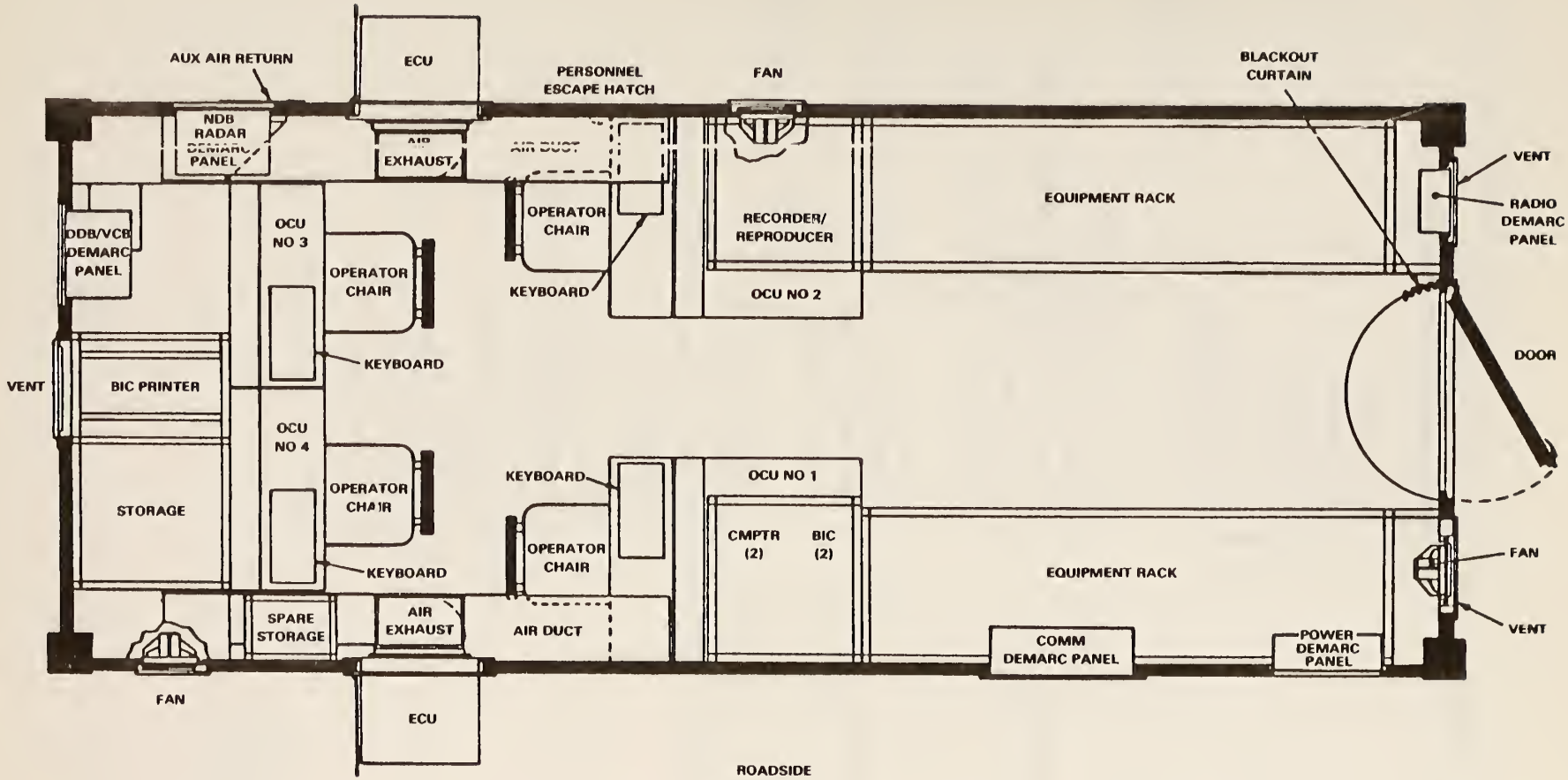

Figure 3-7. Operations Module (OM)

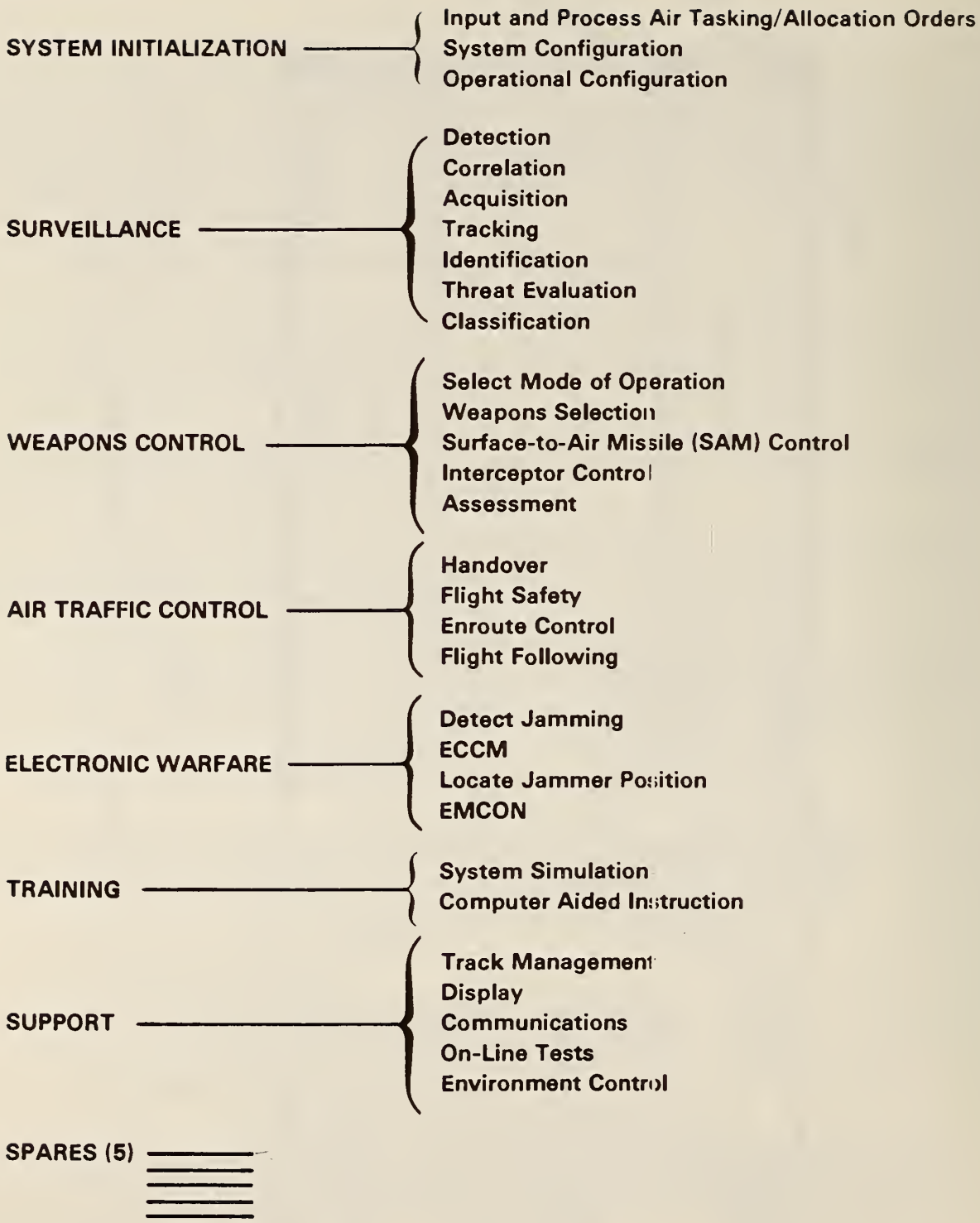

Figure 3-8. TAOM Major Functions and Subfunctions

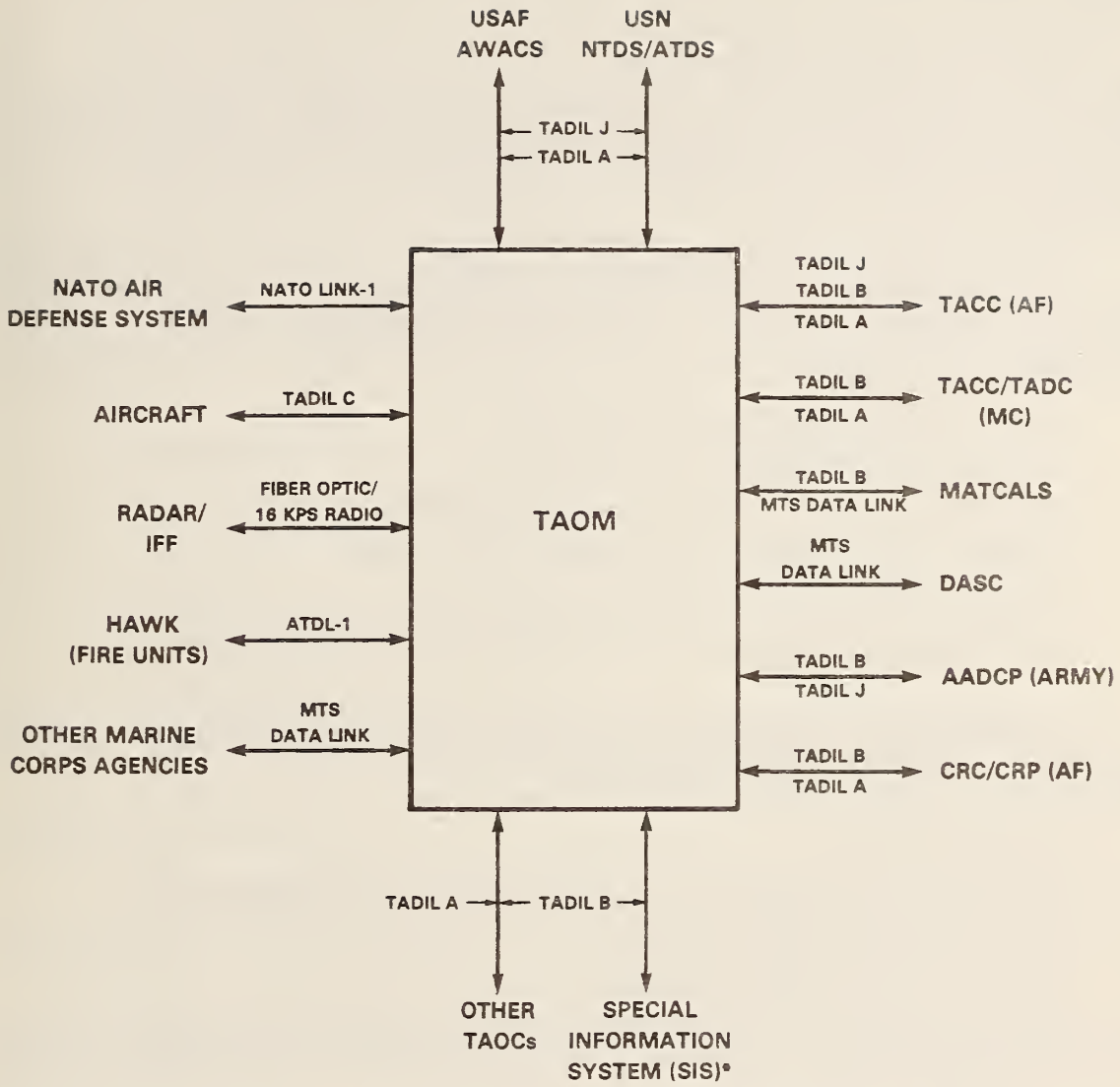

*SEE JCS PUB 10 FOR DETAILS CONCERNING THIS INTERFACE

Figure 3-9. TAOM External Data Link Interfaces.

304.1.3.4 Major Items of Equipment. Major items of equipment included in each TAOM include:

a. Operator Console Unit (OCU). Each TAOM will have four OCUs that provide system operators with real-time situation and auxiliary displays and that provide the man-machine interface with the TAOM. The man-machine interface is provided by a system access unit--keyboard--and "finger-on-glass" of the display. Each OCU is capable of operating in any of the system modes of operation.

b. Voice Communications Access Unit (VCAU). Each TAOM contains four VCAUs, one at each OCU. Each VCAU provides access to the TAOM intercommunication subsystem and to all communication devices used for external communications including:

- Six remotely-channeled UHF radios.
- Eight multidestination net radios.
- One unit level circuit switch loop (deferred).
- Four direct access voice trunks (Hot-Lines).
- Four voice circuits to radar sites.
- A Digital Subscriber Voice Terminal (DSVT), TSEC/KY-68.

c. Communications Interface Unit (CIU). The CIU provides all internal and external switching requirements for the TAOM. This includes all data, radio, and wire links. The CIU can switch:

- Nine radios.
- All digital communication units less radar interfaces.
- All cryptographic equipment.
- Four VCAU command circuits.
- All external communications including five unit level circuit switch loops.
- Twelve external radio voice circuits.
- Twelve circuits for TADIL B, ATDL-1, NATO Link 1, and four voice circuits for communication with the radar sites.

d. Computer Unit (CU). The types and numbers of CUs to be used in production TAOMs have not been determined.

e. Mass Memory Unit (MMU). The MMU provides nonvolatile storage for data bases, programs, initialization data, and other data separate from the CU internal memory. At system startup, all necessary data are read from the MMU into the CUs.

f. Mass Memory Loader (MML). The MML is used to load program data into the MMU. Changes to operational programs generated at a software support facility can be distributed to the field organizations by means of an MML.

g. Internal Radio Unit (IRU). The IRU provides the necessary racks for installation of up to four UHF, three VHF, and two HF radios within each TAOM.

h. Joint Tactical Information Distribution System (JTIDS) Module. The JTIDS module consists of a class 2H JTIDS terminal mounted in an S-280 shelter. A fiber optic cable will be used to connect the module to the TAOM shelter.

i. Digital Communications Unit (DCU). The DCU provides modems and encryption devices required for the transmission and receipt of digital data including:

- TADIL A
- TADIL B
- TADIL C
- TADIL J
- ATDL-1
- NATO Link 1
- Marine Tactical Systems (MTS) messages.

The DCU has access to the radios installed in the IRU and to the external communication devices.

j. Radar Interface Unit (RIU). The RIU is capable of processing input from up to four radar/IFF sets, two of which may be remoted from the TAOM via a narrowband, secure radio link.

k. Printer Unit (PRU). The PRU provides hard copy for data selected by the OCU operator for printing. The PRU prints 600 lines per minute at 80 characters per line.

l. Recorder/Reproducer Unit (R/RU). The R/RU provides recording and playback of voice communications. The unit provides a time-recording capability to permit correlation of recorded events with the time they occurred.

m. Power Distribution and Control Unit (PDCU). The PDCU simultaneously accepts input power from both primary and backup sources, and provides manual switchover when necessary. Electric power will normally be provided from a mobile electric power generating system or commercial sources.

n. Environmental Control Unit (ECU). Two ECUs are provided for each TAOM.

304.1.4 Acquisition Strategy. The TAOM has been developed under a series of contracts with Litton Data Systems. Developmental testing of the engineering development model was completed in May 1986, and operational testing and evaluation started in June 1986. OT&E of the EDM was completed in October 1986. A production decision (MCPDM III) was held in December 1986. An IOC for the TAOM is projected for September 1990.

304.1.5 Acquisition Schedule

Event	Date
Advanced Development Objective (ADO) No. CCC 1.X Marine Air Command and Control System--1985, (MACCS-85)-issued	Apr 75
ROC No. CCC 1-28, MACCS-85-issued	Jan 78
Contract Definition (CD), contract-awarded	Nov 78
CD reports and EDM proposals received	May 79
MSARC II	Sep 79
EDM contract awarded	Sep 79
DT II completed	May 86
OT II initiated	Jun 86
OT II completed	Oct 86
MCPDM III	Dec 86
IOC	Oct 90

304.1.6 Personnel and Training Requirements

304.1.6.1 Personnel. Preliminary estimates of operator and maintenance personnel required for the TAOM will be validated during operational testing. New operator military occupational specialties are not expected to be required. Much of the TAOM field maintenance will be performed by system operators using built-in test equipment for automatic or manual fault detection and isolation. There may be a reduction in personnel requirements in the electronic maintenance unit of the Marine air control squadrons. Depot-level maintenance personnel requirements are expected to remain unchanged.

304.1.6.2 Training. TAOM operator and maintenance personnel will be given formal instruction in operational and maintenance procedures at the Marine Corps Communications-Electronics School. Existing courses will be modified as necessary to incorporate new operational concepts and techniques. Courses are expected to remain comparable in length and depth of content to those presently established. Transitional courses have been provided by the contractor for operator and maintenance personnel who participated in DT II and OT II. The TAOM will have a built-in training capability that will permit

functional on-the-job training of operator and maintenance personnel and for training of the complete TAOC. Simulation capabilities will provide input consisting of radar reports, radar video, IFF reports, IFF video, and input through the various TADILs.

304.1.7 Documentation

Document	Date
General Operational Requirement (GOR) No. CCC-1, Command, Control, and Communications (U), Secret-HQMC	3 Apr 72
ADO No. CCC-1.X - Development Project Officer (DPO)	9 Apr 75
MACCS-85 Working Group Proceedings, CONFIDENTIAL	21 May 76
MACCS-85 Working Group Proceedings (2nd Annual Meeting), CONFIDENTIAL	Mar 77
System Description Document (SDD), Marine Air Command and Control System-1985, Tactical Air Operations Center (MACCS-85 TAOC) with Change 1, dated 14 Sep 77 - Naval Ocean Systems Center (NOSC)	Jul 77
Required Operational Capability (ROC) No. CCC 1-28, Marine Air Command and Control System-1985 (MACCS-85) - HQMC	25 Jan 78
CMC Ltr RDD-23-kmp, Subj: Title Change for Marine Corps R&D Project No. C0038-CC	23 Oct 78
Statement of Work for TAOC-85 Engineering Development Model - NAVELEX	25 Oct 78
Acquisition Plan (AP) - DPO	Jan 79
Life-Cycle Cost (LCC) Estimate - CALCULON	Feb 79
Integrated Logistic Support Plan (ILSP) - Acquisition Manager	Jun 79
Cost and Operational Effectiveness Analysis (COEA) - Acquisition System Project Officer (ASPO)	Jul 79
Acquisition Decision Memorandum (ADM) MSARC II - Development Coordinator (DC)	Jul 79
Engineering Development Model Contract - NAVELEX	Sep 79
Contract Specification Tactical Air Operations Central-1985 (TAOC-85), Engineering Development Model, ELEX-T-316C - NAVELEX	30 Sep 80

Document	Date
Test Planning Document (TPD), Outline Test Plan for OT III-OTPO	Jul 80
Detailed Test Plan, OT II - OTPO	Nov 81
NAVELEX Contract Specification, ELEX-T-316D	Jun 82
Test Planning Document, ID 79-07-03	Mar 83
Acquisition Plan #SPAWAR 85-11 (Alternative Acquisition Plan) for the Tactical Air Operations Module	31 Dec 85
Development Bulletin No. 7-86. Concept of Employment of the Tactical Air Operations Module AN/TYQ-23(V)1	Jul 86
TAOC-85 Test and Evaluation Master Plan (TEMP)	Nov 86
LAP Part I Revision and Part II - APO	Nov 86
Life-Cycle Cost Estimates Revised - DPO	Dec 86
ROC CCC-1.28C, Tactical Air Operations Central-1985 (TAOC-85), Revision - DPO	9 Feb 87
Marine Corps RDT&E Work Directive C0038-X/Tactical Air Operations Central-1985	Revised Annually

304.2 Advanced Tactical Air Command Central (ATACC)

304.2.1 Requirement. The Marine Corps requires an improved system for command and control of MAGTF air operations. An element of this requirement is for an improved tactical air command central that will provide the tactical air commander (TAC) with the facilities needed for planning, controlling, and coordinating MAGTF air operations. The Tactical Air Command Central, AN/TYQ-1; Tactical Data Communications Central, AN/TYQ-3A; and associated equipment currently employed to support the tactical air command center (TACC) are inadequate to meet the projected operational requirements in the 1990-2000 time frame. An IOC for the ATACC is required in FY92 and a full operational capability is required in FY94.

304.2.2 Concept of Employment. The TACC is the senior Marine air command and control agency from which the TAC exercises overall supervision, coordination, and general control of tactical air operations. Subordinate agencies through which the TACC exercises these functions include the TAOC, DASC, Marine air traffic control squadrons (MATCSs), and various terminal control action elements.

The TACC consists of two mutually supporting sections equipped for carrying out planning and operational functions. The ATACC will provide the TACC with a planning segment and an operations segment consisting of hardware and software designed to accomplish TACC functions. The ATACC-supported TACC must function in concert with other agencies to provide responsive direction and coordination of MAGTF air assets in the accomplishment of its responsibilities. The ATACC will provide the versatility to deploy TACC planning and operational segments commensurate with the functions of MAB- and MAF-size and to build up or scale down its capabilities by augmenting, reconfiguring, or reducing modular segments of the system as operational requirements change.

304.2.3 System Description. The ATACC will be a computer-supported facility which provides the TAC with the resources needed for planning and directing the air battle. It will consist of four 8'x8'x20' ISO shelters and a shelter housing the JTIDS terminal. Typically two of these shelters will form a MAB TACC suite of equipment. The shelters of this suite shall be capable of water-tight physical connection. However, they will be capable of mission performance when only electrically connected. Four shelters may be electrically joined to form a MAF TACC.

When the MAF TACC is formed, two shelters will support the plans section and two shelters will support the operations section. When one suite of two shelters is used as a MAB TACC, it will perform both functions.

Each suite shall house operator consoles, desk-top terminals, table-top workstations with communications units, data processors, computer programs, communications access devices, a large screen display, and other equipment necessary to perform operational functions.

304.2.3.1 Functions. The ATACC supports the functions of the planning and operations sections of the TACC.

a. The planning section is primarily concerned with future conduct of air operations. Functions performed include:

- Assisting in the determination of operational requirements for the MAGTF aviation component.
- Allocating aircraft resources in accordance with operational requirements.
- Publishing daily air tasking orders for the conduct of air operations and fragmentary supplements to those orders.
- Planning air operations as directed.
- Coordinating air operations with higher, adjacent, and supported commands.

- Processing, maintaining, and disseminating intelligence information.

b. The operations section is primarily concerned with coordinating and supervising the execution of air operations. Functions performed include:

- Monitoring air operations to ensure compliance with standing operating procedures, daily air tasking orders, and fragmentary orders.

- Establishing task assignments and sectors of responsibility for MACCS agencies.

- Establishing and disseminating air defense alert conditions.

- Coordinating the operation of MACCS agencies by establishing control procedures and reference points.

- Maintaining up-to-date information on aircraft availability and MACCS agency equipment status.

- Directing the launch, transfer of control, and change of assignment of aircraft as required.

- Coordinating the air defense of the MAGTF area of responsibility by supervising MACCS agencies and allocating resources as required.

- Monitoring weather in the MAGTF objective area and keeping Marine aircraft groups and MACCS agencies apprised of weather conditions that affect air operations.

- Coordinating search and rescue operations.

- Coordinating medical evacuation operations.

- Coordinating aircraft dispersal operations.

- Establishing and maintaining data link operations within the MACCS and with external agencies.

- Setting weapons release conditions.

304.2.3.2 Interoperability. The ATACC will be interoperable with other Marine Corps, Service, and NATO systems as depicted in Figure 3-10. The ATACC will also have voice communications with the agencies depicted in Figure 3-10 by net radio or telephone.

304.2.3.3 Major Items of Equipment. The ATACC will consist of four shelters as previously described and a JTIDS module. Each shelter, when fully configured for transport, will weigh no more than 10,000 pounds. The JTIDS module will consist of a class 2H JTIDS terminal mounted in a separate shelter.

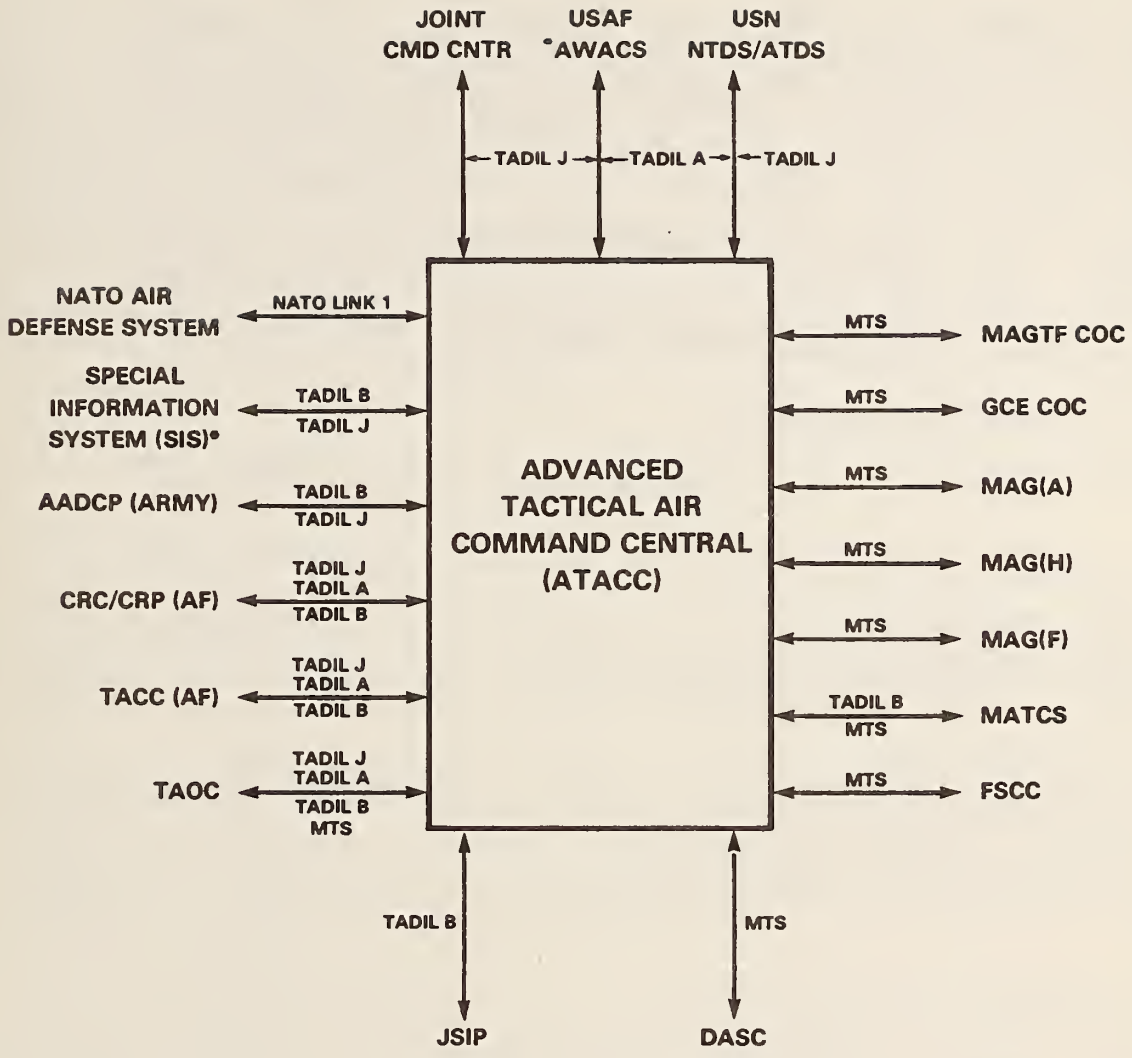

*SEE JCS PUB 10 FOR DETAILS CONCERNING THIS INTERFACE

Figure 3-10. ATACC Data Link Interfaces

The ATACC program will use existing equipment approved for service use or militarized off-the-shelf hardware wherever possible.

304.2.4 Acquisition Strategy. An urgent need has been identified for the Marine Corps to replace the present AN/TYQ-1 and AN/TYQ-3A employed with the TACC. To reduce development time and to minimize hardware risks, the ATACC will make maximum use of equipment in the Marine Corps inventory and other nondevelopmental items. The program provides for delivery of a prototype system for operational testing in FY90. The prototype system, consisting of four shelters, will undergo any required refurbishment on completion of operational testing. It will then become one of the seven production systems. The strategy for acquisition of the ATACC is evolutionary in concept. The first step is to replace the AN/TYQ-1 and AN/TYQ-3A with existing proven hardware and systems technology. The second step will provide for preplanned enhancements to the fielded ATACC.

304.2.5 Acquisition Schedule

Event	Date
ROC approved	6 Jun 85
MSARC II approval	17 Jun 86
Request for proposals for prototype issued	FY87
Prototype contract awarded	FY87
Prototype delivered	FY90
Government test and evaluation	FY90
MCPDM III, Procurement decision	FY90
Contract for production systems awarded	FY91
IOC	FY92
Last production system delivered	FY94

304.2.6 Personnel and Training

304.2.6.1 Personnel. It is anticipated that there will be no increase above present levels of operational, maintenance, or support personnel required in connection with the fielding of the ATACC.

304.2.6.2 Training. Operator and maintenance personnel will require a formal course of instruction similar to training programs for the present systems supporting the TACC. Maximum commonality of ATACC components with other subsystems of MACCS will facilitate consolidation of instructional resources.

304.2.7 Documentation

Document	Date
ROC NO. CCC256.1 For an Advanced Tactical Air Command Central (ATACC)	6 Jun 85
Acquisition Decision Memorandum (Milestone II)	8 Aug 86
System Specification for the Advanced Tactical Air Command Central, ELEX-T-620	20 Apr 87
Marine Corps RDT&E Work Directive C0103-H, Advanced Tactical Air Command Central (ATACC)	Revised Annually
Draft Acquisition Plan No. SPAWARSYSCOM 86-18, Advanced Tactical Air Command Central (ATACC)	Undated Draft

304.3 Marine Remote Area Approach and Landing System (MRAALS)

304.3.1 Requirement. The Marine Corps has a requirement for a remote area terminal guidance system for vertical/short takeoff and landing (V/STOL) type aircraft. The requirement is contained in Navy Specific Operational Requirement (SOR) 34-26, MRAALS, dated 22 December 1971.

304.3.2 Concept of Employment. MRAALS will be employed by MATCSs to provide helicopters and other V/STOL-type aircraft with the capability of locating remote landing zones and making approaches in instrument meteorological conditions. Each MATCS will have the capability to simultaneously employ MRAALS at four expeditionary landing fields
and seven remote landing sites.

304.3.3 System Description

304.3.3.1 Functions. MRAALS consists of two subsystems, a ground transmitter subsystem and an airborne subsystem installed in aircraft. The ground transmitter subsystem; Transmitting Set, Aircraft Approach Control, AN/TPN-30; provides the pilot of a suitably equipped aircraft with information concerning the position of his aircraft relative to a predetermined glide slope and centerline in addition to the slant range distance to the touchdown point during his final approach for landing. The airborne system, Multi-Mode Receiver AN/ARN-138, displays this information on the standard instrument landing system crosspointers and range/rate of closure indicators. The pilot manually controls the aircraft during the approach and landing.

304.3.3.2 Interoperability. The ground transmitter subsystem must be compatible with the airborne subsystem. There are no external interface requirements. The MMR also operates with the Instrument Landing System (ILS), the Microwave Landing System (MLS), and the Navy C-Scan AN/SPN-41 Automatic Carrier Landing System (ACLS).

304.3.3.3 Major Items of Equipment

a. Aircraft Approach Control Transmitting Set. The AN/TPN-30 is a tactical, all-weather aircraft approach guidance subsystem using scanning beam technology to transmit pulse-coded microwave (Ku band) signals, which provide glide slope and localizer information to suitably equipped aircraft. The AN/TPN-30 also transmits L-band distance measuring equipment (DME) signals that are compatible with the aircraft Tactical Air Navigation System (TACAN) for distance measurement only. The azimuth/elevation signal format is compatible with the Navy ACLS and land-based AN/TRN-28. The landing signal is processed in the aircraft by the AN/ARA-63 Receiving Decoding Group and is displayed in the aircraft on standard crosspointer instruments for angle guidance.

b. Multi-Mode Receiver (MMR), AN/ARN-138. The MMR development has been initiated for the purpose of making aircraft compatible with the International Civic Aviation Organization/Federal Aviation Administration (ICAO/FAA) microwave landing system (MLS). The MMR consists of the following major components:

- Radio receiver.
- Navigation computer.
- DME coupler calibrator.
- Range/height/rate unit.
- Receiver control unit.
- C-band cable amplifier.

The last three items are optional components. Their use is dependent on the type aircraft in which the MMR is installed.

304.3.4 Acquisition Strategy

a. Singer-Kearfott and Telephonics were awarded contracts in December 1979 to furnish four MMR engineering development models. Subsequently, Telephonics discontinued participation in the MMR development program. Austere funding and escalating costs have delayed the program. The acquisition schedule is described in paragraph 303.3.5 below.

b. The U.S. Air Force is the lead service for development of a Department of Defense Microwave Landing System. The FAA is the developer and has a production contract with Hazeltine for 110 systems to be installed at civil airports in 1987. The first Navy shore-based system will be installed and flight certified in FY 89. The objective of the MLS is to develop a common civil and military landing system concept and standard signal format to satisfy all user requirements. Additionally, it may be proposed as the national and international standard to replace incompatible systems in use or under development. The plan provides for fabrication of development models in

various configurations for test in the intended users' operational environment to determine system suitability. Pending completion of this determination, no operational requirement for implementation of MLS has been established by the Navy or Marine Corps. However, system characteristics required of MLS have been compiled and provided to the FAA as the basis for development of a system to meet requirements of the Navy and Marine Corps.

c. Engineering changes to the AN/TPN-30, currently being explored for suitability, include

(1) 360 degree azimuth guidance information.

(2) Increased message data signal transmission defining the landing environment; e.g., touchdown zone elevation and split-site geometry.

304.3.5 Acquisition Schedule

a. Multi-Mode Receiver

Event	Date
EDM DT&E started	1st Qtr FY85
EDM DT&E completed	4th Qtr FY86
Technical evaluation begins	1st Qtr FY88
Technical evaluation completed	4th Qtr FY88
Operational evaluation begins	4th Qtr FY88
Operational evaluation completed	3rd Qtr FY89
Production approval	4th Qtr FY89
IOC	1st Qtr FY90

b. Department of Defense Microwave Landing System. The Services are programmed to receive MLS hardware for testing in FY 87.

304.3.6 Documentation

Document	Date
Navy Specific Operational Requirement 34-26, Marine Remote Area Approach and Landing System (MRAALS)	22 Dec 71
Cdr NAVELEX ltr ELEX-1-118A; Subj: Naval Electronics Systems Command Contract Specification, MRAALS	13 Mar 72

Operational Requirements for Aircraft Carrier Microwave Landing System	Dec 75
U.S. Marine Corps Requirement for Microwave Landing System	8 Apr 76
CG, MCDEC, Msg P171750Z Aug 77; Subj: MRAALS Ground System (AN/TPN-30) First Article Evaluation	17 Aug 77
MATCU-24 ltr 1:AED:hk; Subj: AN/TPN-30 Initial Operational Test and Evaluation; report of	29 Sep 77
COMOPTEVFOR 53 ypv/3960 (546-OT-111B) ser 1206; Subj: Evaluation Report AN/ARN-128 AWLS Airborne Part of MRAALS	30 Jul 80
CNO ltr 098R/3U353296; Subj: Operational Requirement #004-05-83, Multi-Mode Receiver (MMR)	6 Sep 83
Test and Evaluation Master Plan (TEMP) No. 888; Approach and Landing Control Set AN/ARN-138, Multi-Mode Receiver (MMR)	
DDR&E Memorandum Subj: DoD Microwave Landing System (MLS) Program	8 Dec 82

304.4 Marine Air Traffic Control and Landing System (MATCALS)

304.4.1 Requirement. The Marine Corps requires an air traffic control and landing system that will provide a semiautomated terminal air traffic control capability for control of high volume traffic with minimum weather and visibility limitations. MATCALS is an integral part of MACCS.

304.4.2 Concept of Employment. MATCALS is a deployable, air transportable, modular system. It is operated by the MATCS. It is capable of controlling the air space, including all arriving and departing aircraft, within a 60-nautical mile radius of an airfield. A MATCS is capable of supporting four expeditionary airfields.

304.4.3 System Description. MATCALS consists of three subsystems:

- An air traffic control subsystem (ATCS).
- An all-weather landing subsystem (ALS).
- A control and communications subsystem (CCS).

304.4.3.1 Functions. MATCALS provides semiautomated and automated capabilities for aircraft surveillance, identification, tracking, vectoring, track hand-over, and cross-telling(*). The system provides automated tracking based

* Cross-tell or lateral-tell is the transfer of information between facilities that are at the same operational level or echelon of command.

on correlation of radar; identification, friend or foe; and data-link replies. The system provides simultaneous landing control, in one or more of three landing modes. It may control up to six aircraft with a routinely sustained safe landing rate of one aircraft per minute. It has the technical capability of increasing the rate to two aircraft per minute. The three landing modes are:

- Mode I: Fully-coupled, automatic control to touchdown.
- Mode II: Pilot-controlled approach, with guidance cues provided by cockpit displays, such as cross-pointer indicator, heads-up display, or ground-air data link by TADIL C.
- Mode III: Pilot-controlled approach, with guidance cues provided by a ground-based operator in the classic ground-controlled approach (GCA) talk-down procedure.

304.4.3.2 Interoperability. The control and communications subsystem of MATCALS will have the following interfaces:

- CCS with the AN/TYQ-23 TAOM—semiautomated using TADIL B and MTS message sets. (The TADIL B interface is deferred)
- CCS with the ATACC—semiautomated using TADIL B and MTS message sets. (The TADIL B interface is deferred)
- CCS with aircraft--automated and semiautomated via TADIL C.

Communications with other agencies are provided by telephone and net radio. Voice communications are also provided with aircraft by radio.

304.4.3.3 Major Items of Equipment. MATCALS consists of three major components described in the following paragraphs.

a. Air Traffic Control Subsystems. The Radar Surveillance Central, AN/TSQ-107 is the current ATCS. The primary function of the AN/TSQ-107 is to detect and identify airborne aircraft at ranges up to 250 miles. It relays this information to the CCS. The AN/TSQ-107 shelter houses a modified AN/UPS-1C radar and a modified AN/TPX-42A(V)5 interrogator set. The AN/TSQ-107 requires 400 Hz primary power and is difficult to maintain and support because of its age. The Naval Electronics Center (NAVELEXCEN), Vallejo, California is tasked with updating and modifying the AN/TSQ-107 to meet MATCALS requirements pending the acquisition of a replacement.

b. All-Weather Landing Subsystem. The Radar, Ground Control Approach, AN/TPN-22 is the current ALS. It is a navigational aid for the controlled approach and landing of aircraft in forward areas. It operates as an integral data acquisition and processing computer subsystem in concert with the CCS for simultaneous manual, semiautomated, or automated aircraft approach and landing operations. The AN/TPN-22 can automatically detect and track six aircraft simultaneously in the approach and landing airspace.

c. Control and Communications Subsystem. The Control and Communications System, AN/TSQ-131(V) is the current MATCALS CCS. It is a transportable facility consisting of two functionally identical shelters. Each shelter contains the equipment required to provide data processing, user-interface, display functions, and communications. Each shelter has four controller positions, each provided with an AN/UYQ-34 multi-mode display, that can control, manage, and monitor approach and departure flight operations. The AN/TSQ-131(V) integrates data received from the ATCS, ALS, and external agencies into a unified air traffic control system, primarily through the use of the AN/UYQ-34 multimode displays.

304.4.4 Acquisition Strategy

a. Air Traffic Control Subsystem. A contract was let with UNISYS during September, 1986 for a replacement ATCS. The acquisition schedule is described in paragraph 304.4.5, below.

b. MATCALS Operational Computer Software Development. The following MATCALS operational computer software capabilities were deferred during MATCALS development and acquisition as items to be developed and implemented subsequent to the MATCALS deployment decision:

- Mode I landing capability for F/A-18, A-6, and F4 aircraft.
- TADIL B capability.
- Flight Progress Data Link (FPD) capability.

These items have been or are being developed and implemented in accordance with the schedule contained in paragraph 304.4.5, below.

304.4.5 Acquisition Schedule. The AN/TSQ-131(V) CCS and AN/TPN-22 ALS are currently in service.

a. Air Traffic Control Subsystem. The ATCS replacement for the AN/TSQ-107 is programmed for development in accordance with the following schedule:

Event	Date
Request for proposals issued	May 85
Contract awarded to UNISYS	Sep 86
First article delivery (1 unit)	Dec 87
Developmental and operational testing	Jan-Jul 88
MSARC III, production decision	Sep 88
First production delivery	1st Qtr FY 1989

b. MATCALS Operational Computer Software Development. MATCALS operational computer software has been or is being developed and implemented in accordance with the following schedule:

Item	Date Completed or Planned for Completion
Mode I and flight command generation (CG) software contract awarded	Apr 85
TADIL B and flight progress data link (FPD) contract	Deferred
Mode I software DT/OT	Jan 87
TADIL B DT/OT	To be determined

304.4.6 Documentation

Document	Date
CNO ltr 982E/2018, Subj: SOR 34-22, Marine Air Traffic Control and Landing System (MATCALS)	12 Jul 73
Navy Decision Coordinating Paper for MATCALS (NDCP #0718-CC)	30 Jul 81
Marine Corps RDT&E Work Directive C0082-C, Marine Air Traffic Control Squadron (MATCS) Equipment	Revised Annually

304.5 Tactical Air Command Central, AN/TYQ-1

304.5.1 Requirement. The AN/TYQ-1, together with the Tactical Data Communications Central, AN/TYQ-3(A), are the two principal TDSs currently supporting the tactical air command center. The TACC provides the tactical air commander with the facilities needed for planning, controlling, and coordinating MAGTF air operations. The AN/TYQ-1 and AN/TYQ-3(A) are programmed for replacement by the ATACC starting in FY 1992.

304.5.2 Concept of Employment. Employment of the AN/TYQ-1 in support of the TACC is in accordance with current doctrine and procedures described in LFM 01, Doctrine for Amphibious Operations; FMFM 0-1, Marine Air-Ground Task Force Doctrine; and FMFM 5-1, Marine Aviation. The concept of employment of the TACC is summarized in chapter II.

304.5.3 System Description

304.5.3.1 System Functions. System functions are the same as those described for the ATACC in section 304.2. Functions of the TACC are described in FMFM 5-1.

304.5.3.2 Interoperability. The AN/TYQ-1 interoperates with other Marine Corps, other Service, and NATO systems as depicted in Figure 3-11. The AN/TYQ-1 also has voice communications with the agencies depicted in Figure 3-11 by net radio or telephone. The AN/TYQ-3(A) provides the interfaces between the AN/TYQ-1 and the other systems.

304.5.3.3 Major Items of Equipment. Major components of the AN/TYQ-1 include:

- Operations Group, AN/TYA-1.
- Planning Group, AN/TYA-3.
- Communications Group, AN/TYA-16(V).
- Maintenance Facility Group, AN/TYA-28.

Detailed descriptions of these components are contained in Marine Corps TM-2000-15/2, Principal Technical Characteristics of U.S. Marine Corps Communication-Electronic Equipment.

304.5.4 Acquisition Strategy and Schedule. The AN/TYQ-1 is currently in use. It is scheduled to be replaced by the ATACC starting in FY 1990.

304.5.5 Documentation

Document	Date
Marine Corps TM-2000-15/2, Principal Technical Characteristics of U.S. Marine Corps Communication-Electronic Equipment.	30 Jun 83
FMFM 5-1, Marine Aviation.	24 Aug 79

304.6 Tactical Air Operations Central, AN/TYQ-2

304.6.1 Requirement. The AN/TYQ-2, together with the Tactical Data Communications Central, AN/TYQ-3(A), are the two principal TDSs currently supporting the tactical air operations center. The TAOC is a MACCS agency that controls an air defense sector, en route air traffic within the assigned area of responsibility, and air defense operations, including assigned manned interceptors and surface-to-air missiles. The AN/TYQ-2 and AN/TYQ-3(A) are programmed for replacement by the Tactical Air Operations Module, AN/TYQ-23(V)1, starting in the 1st quarter of FY91.

304.6.2 Concept of Employment. Employment of the AN/TYQ-2 in support of the TAOC is in accordance with current doctrine and procedures described in LFM 01, Doctrine for Amphibious Operations; FMFM 0-1, Marine Air-Ground Task Force Doctrine; FMFM 5-1, Marine Aviation; and FMFM 5-5, Antiair Warfare. The concept of employment of the TAOC is summarized in chapter II.

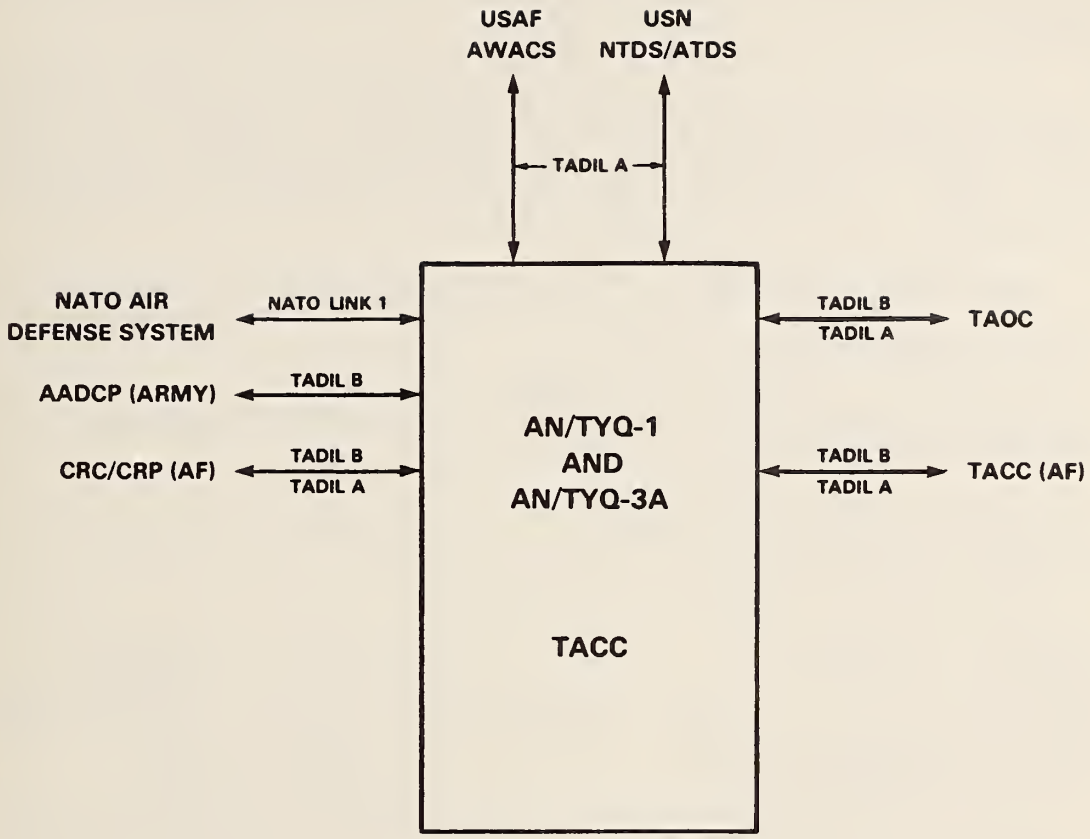

Figure 3-11. Current TACC Data Link Interfaces

304.6.3 System Description

304.6.3.1 System Functions. System functions are the same as those described for the TAOM in section 304.1. Functions of the TAOC are described in FMFM 5-1 and FMFM 5-5.

304.6.3.2 Interoperability. The AN/TYQ-2 interoperates with other Marine Corps, other Service, and NATO systems as depicted in Figure 3-12. The AN/TYQ-2 also has voice communications with the agencies depicted in Figure 3-12 by net radio or telephone. The AN/TYQ-3(A) provides the interfaces between the AN/TYQ-2 and the other systems.

304.6.3.3 Major Items of Equipment. Major components of the AN/TYQ-2 include:

- Central Computer Group, AN/TYA-5.
- Operations Group, AN/TYA-9(A) (4 each).
- Operations Group, AN/TYA-9(B) (1 each).
- Maintenance Group, AN/TYA-27.
- Communications Group, AN/TYA-12.
- 3D Radar Processor Group, AN/TYA-18.
- Unit Test Group, AN/TYA-23.

Detailed descriptions of these components are contained in Marine Corps TM-2000-15/2, Principal Technical Characteristics of U.S. Marine Corps Communication-Electronic Equipment.

304.6.4 Acquisition Strategy and Schedule. The AN/TYQ-2 is currently in use. It is scheduled to be replaced by the Tactical Air Operations Module, AN/TYQ-23.

304.6.5 Documentation

Document	Date
Marine Corps TM-2000-15/2, Principal Technical Characteristics of U.S. Marine Corps Communications-Electronic Equipment.	30 Jun 83
FMFM 5-1, Marine Aviation.	24 Aug 79
FMFM 5-5, Antiair Warfare.	14 Jul 80

304.7 Tactical Data Communications Central, AN/TYQ-3(A)

304.7.1 Requirement. The AN/TYQ-3(A) is used in conjunction with the AN/TYQ-1 and AN/TYQ-2 to provide tactical data and voice circuits for the TACC and TAOC, respectively.

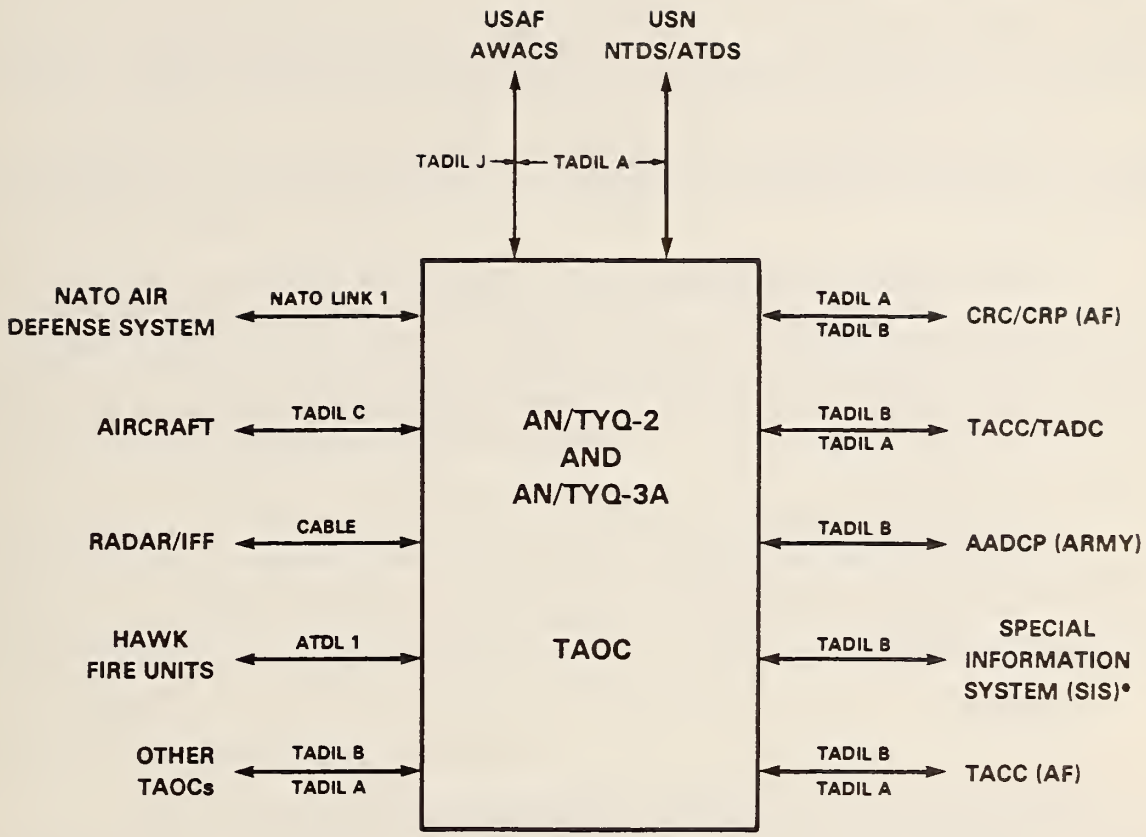

*SEE JCS PUB 10 FOR DETAILS CONCERNING THIS INTERFACE

Figure 3-12. Current TAOC Data Link Interfaces

304.7.2 Concept of Employment. See paragraphs 304.4.2 and 304.5.2.

304.7.3 System Description

304.7.3.1 System Functions. The AN/TYQ-3(A) provides tactical data and voice circuits for the TACC and TAOC. It also performs the NADGE buffer function, wherein data is exchanged with NATO data link systems.

304.7.3.2 Interoperability. AN/TYQ-3(A) interoperability is depicted in Figures 3-11 and 3-12 for its employment in support of the TACC and TAOC, respectively.

304.7.3.3 Major Items of Equipment. The AN/TYQ-3(A) contains, in a single shelter, all of the radio, data terminal, and data conversion subsystems for receiving, transmitting, and processing TADIL A (Link 11), TADIL B, TADIL C (Link 4A), ATDL-1, and NATO Link 1 messages as required by the TACC and TAOC. From the control console, a single operator has full control over data link allocations, shelter operation, and the communication subsystems, including security equipment.

304.7.4 Acquisition Strategy and Schedule. The AN/TYQ-3(A) is currently in use. It is scheduled to be replaced in its TACC application by the ATACC and in its TAOC application by the AN/TYQ-23.

304.7.5 Documentation

Document	Date
Marine Corps TM-2000-15/2, Principal Technical Characteristics of U.S. Marine Corps Communications-Electronic Equipment.	30 June 83
FMFM 5-1, Marine Aviation.	24 Aug 79
FMFM 5-5, Anti air Warfare.	14 Jul 80

304.8 Direct Air Support Central

304.8.1 Requirement. The Marine Corps has a requirement for facilities with which to control all aircraft operating in direct support of FMF operations.

304.8.2 Concept of Employment. The DASC is the principal air control agency responsible for the procedural control of close air support and assault support aircraft directly supporting ground forces. It is decentralized in its mode of operations; however, it is directly supervised by the TACC/TADC. The DASC works in close coordination and cooperation with the senior GCE FSCC. It coordinates close air support strikes, assault support, and air reconnaissance missions that require coordination with other fire support means. It also disseminates friendly and enemy aircraft information to LAAD

units, and coordinates the distribution of air assets assigned by the TACC or other aviation C^2 centers to appropriate terminal control agencies. A detailed description of the concept of employment of the DASC is contained in FMFM 5-1, Marine Aviation.

304.8.3 System Description. There are currently two types of direct air support centrals in use. They are:

- The Operations Central, AN/TSQ-122 configured with the necessary communications equipment, tables, situation displays and other equipment required to support a DASC.

- The Airborne-Mobile Direct Air Support Central, AN/UYQ-3A.

The AN/TSQ-122 configured as a DASC will be replaced by the Improved Direct Air Support Central (IDASC), AN/TSQ-155(V) which will provide an improved interim system until MIFASS is fielded. The MIFASS program includes provisions for performing DASC functions.

304.8.3.1 Functions. The functions of the DASC are described in detail in FMFM 5-1.

304.8.3.2 Interoperability. Interfaces between the AN/TSQ-122 and AN/UYQ-3A DASCs and external agencies are manual. Interfaces between the IDASC and external agencies will also be manual. Interfaces of the MIFASS-equipped DASC are described in section 301 and in chapter III.

304.8.3.3 Major Items of Equipment

a. Operations Central, AN/TSQ-122. The AN/TSQ-122 DASC is an S-106/TSQ Prefabricated Panelized Building measuring 40' x 20' x 10'. There are provisions for 18 operators with a selection 24 HF, VHF, and UHF channels. Each operator can access other operators through the intercommunications system and can also access the external telephone communication system. DASC displays are standard manual plotting and status boards.

The AN/TSQ-122 has exceeded its originally planned service life. Its life is being extended by a depot-level "return-and-repair" program. It will be replaced by the IDASC in 1987.

b. Airborne-Mobile Direct Air Support Central, AN/UYQ-3A. The AN/UYQ-3A is a transportable electrical shelter. It accommodates seven operators with a selection of radio communications in the HF, VHF, and UHF bands. Each operator can access other operators through the interior communication system (ICS) and can also access external telephone communication system. Displays use standard manual plotting and status boards. The AN/UYQ-3A may operate from the bed of a truck, from within a suitably modified KC-130 aircraft, or from a ground installation.

c. Improved Direct Air Support Central (IDASC), AN/TSQ-155(V). The IDASC will consist of an expandable 20' x 8' x 8' shelter containing communication control consoles, intracommunication and intercommunication stations, display boards and ancillary interface equipment for external communications.

(1) Operator work stations (OWSs) will be provided for 14 to 18 positions and two status board operator stations. Three lighted 4' x 8' display surfaces will be provided.

(2) The communication control system (CCS)/ICS will be electrically compatible with:

- TSEC/HYX-57 Wire Line Adapter.
- TSEC/KY-57 Secure Voice Equipment.
- TSEC/KY-58 Secure Voice Equipment.
- TSEC/KY-75 Secure Voice Equipment.
- AN/PSC-2 Digital Communications Terminal.
- AN/GXC-7A Facsimile Device.
- SB-3614 Telephone Switchboard.
- TA-838 Telephone Set.
- TA-938 Telephone Set.

CCS/ICS functional requirements include:

- Direct intercommunications between all OWSs.
- Interface with 24 radios in any combination of HF/VHF/UHF frequencies.
- Interface with four, two-wire/four-wire land-line communication devices; e.g., telephones, switchboards, and multichannel radios.
- Interface with one facsimile device.
- Interfaces for four DCTs. All OWSs shall have the ability to terminate one DCT.
- The CCS/ISC prewired to the maximum extent feasible to facilitate rapid system set-up/tear-down.

304.8.4 Acquisition Strategy. The IDASC program provides for the competitive award of an R&D contract to provide an EDM with prepriced options for up to 13 production systems. The Improved DASC will be simple in design: C^2 functions will be performed manually, eliminating the requirement for software development. The contractor will be provided with a DoD ISO, rigid wall, expandable shelter. The contractor will integrate a nondevelopmental CCS/ICS,

situation/status display boards, and OWSs into the shelter. The system architecture will be kept as simple as possible to preclude unnecessary delays and to support an IOC in FY87.

304.8.5 Acquisition Schedule

Event	Date
Publish acquisition plan	1st Qtr FY86
Milestone II in-progress review (IPR)	1st Qtr FY86
Request for proposals issued	2nd Qtr FY86
Contract award	3rd Qtr FY86
Critical design review	FY87
Milestone III, approval for service use and production decision	FY87
IOC	FY87
FOC	FY88

304.8.6 Personnel and Training. No additional personnel requirements are anticipated. The maintenance concept and level of repair for the IDASC will be determined by the nondevelopmental CCS/ICS incorporated into the system. Requirements for training assets, other than the IDASC, will not exceed those currently available.

304.8.7 Documentation

Document	Date
ROC CCC No. 1.4.1, Direct Air Support Central	17 Aug 84
ROC CCC No. 1.07A, Marine Integrated Fire and Air Support System	25 Jul 79
FMFM 5-1, Marine Aviation	24 Aug 79
Marine Corps TM-2000-15/2, Principal Characteristics of U.S. Marine Corps Communication-Electronic Equipment.	30 Jun 83

304.9 Radar Bomb Directing Set (RBDS), AN/TPB-1D

304.9.1 Requirement. The Marine Corps requires a ground-controlled precision flight path guidance and weapons release system that can guide an aircraft to a predetermined point in the air space, and automatically activate weapons release or other functions necessary for the aircraft to perform its mission.

304.9.2 Concept of Employment. Each Marine air support squadron is organized and equipped to install, maintain, and operate ground communication-electronics facilities required for the operation of a DASC and three air support radar teams (ASRTs). The role of the ASRT is to provide day and night, all-weather precision control of aircraft operating in support of MAGTF operations. Individual missions are assigned to the ASRT by the DASC.

304.9.3 System Description

a. Functions. The RBDS is employed by an ASRT to accurately position aircraft for ordinance release. Aircraft are assigned an altitude, heading, and airspeed, and are directed to release ordinance at a computed point to achieve a trajectory that strikes the predetermined target. This is accomplished by using radar position information and manually inserted target position information. Data concerning wind, ordinance ballistics, ordinance velocity, and aircraft speed and altitude are also included. The RBDS may also be used for helicopter spotting, parachute resupply, photo reconnaissance missions, and limited air traffic control.

b. Interoperability. The ASRT equipped with the AN/TPB-1D has voice radio communications with the DASC and with aircraft being controlled on HF, VHF, and UHF radios. Radio nets include:

- The ASRT control Net, linking the ASRT to the DASC.
- The TAOC/ASRT Handover Net, which provides the means to effect handover of aircraft control between the TAOC and ASRT.
- The Tactical Air Direction and Helicopter Direction Nets over which the ASRT controls assigned aircraft.

c. Major Items of Equipment. The RBDS consists of a precision tracking radar and a command and control shelter. Major components are:

- Radar Data Processing Group OA-9003/TPB-1D
- Tower AB-1270/TPB-1D
- Radar Set Group OY-70/TPB-1D
- Radome CW-1193/TPB-1D
- Radar Transmitter T-14067/TPB-1D
- Receiver-Signal Processor R-2155/TPB-1D
- Antenna AS-373/TPB-1D

The RBDS may be deployed in two configurations, using either the "tower configuration" or the "leg set configuration" to elevate the antenna and enhance the radar line-of-sight for tracking aircraft and to the target. The tower elevates the radar from 15 to 25 feet above the ground. The leg set raises the radar elevation six feet above the ground.

304.9.4 Acquisition Strategy and Schedule. The AN/TPB-1D is a Marine Corps adaptation of the Air Force AN/TPB-1C to meet Marine Corps requirements. Nineteen AN/TPB-1Ds have been fielded. Modifications included:

- Modifications to the communication suite.
- Development of an electronic keyboard and map display board.
- Improvement of the aircraft acquisition capability.
- Modification of the weapons ballistics program.
- Refinement of the precision course guidance computer program.

The AN/TPB-1D replaced the Radar Course Directing Central AN/TPQ-10.

304.9.5 Documentation

Document	Date
SOR CC-11.7, Subj: Ground Controlled Precision Flight Path Guidance and Weapons Release System	16 Jun 66 w/change dtd 6 May 77
RDT&E Work Directive C0103-E/Radar Ground Directing Bombing System (RGDBS); AN/TPB-1D, Product Improvement	Updated Annually

304.10 Radar Set, AN/TPS-63

304.10.1 Requirement. The Marine Corps requires a lightweight, air defense radar. The radar will serve as the primary enroute control and surveillance radar within an amphibious objective area. It will complement early warning radars, particularly in the low-altitude area. It will be capable of remote operation and of direct interface with the TAOC.

304.10.2 Concept of Employment. The AN/TPS-63 is organic to the Marine air control squadrons and is employed in conjunction with the TAOC. Processed video is displayed at the set on an AN/UPX-62X display console and supplied to the TAOC either by cable or remoted up to 25 nautical miles via an AN/TXQ-3.

304.10.3 System Description. The AN/TPS-63 is a lightweight, helicopter transportable radar. It provides air surveillance to a range of 80 nautical miles, with timeshared display of IFF data. The radar contains digital target indicator circuits to allow detection of targets in heavy clutter conditions. It is interoperable with the AN/TYQ-2 and will be interoperable with the AN/TYQ-23 TAOM. A modification is being procured in FY89 to double the range of this radar to 160 nautical miles.

The AN/TPS-63 consists of a single 8' x 8' x 10' shelter. The antenna is 18' wide by 16' high. In the transportation configuration, the radar is contained entirely in the shelter.

304.10.4 Acquisition Strategy and Schedule. The AN/TPS-63 was fielded in 1980. A product improvement program was initiated in FY85 for the purposes of:

- Developing the AN/TPS-63--AN/TYQ23 TAOM interface.
- Extending the range of the radar to 160 nautical miles.
- Replacing the traveling wave tube with a solid state driver.
- Enhancing the ECCM features by developing an ultra-low sidelobe antenna.

The improvements are scheduled to be completed by 1990.

304.10.5 Personnel and Training. Repairmen and technicians are trained at the Naval Air Training Command, Memphis, Tennessee and at the Marine Corps Communication-Electronics School, 29 Palms, California.

304.10.6 Documentation

Document	Date
SOR CCC-11.9, Lightweight Air Traffic Control Radar	30 Nov 71
Developmental Bulletin 1-80, Guidelines for Employment of Radar Set, AN/TPS-63	14 Mar 80
RDT&E Work Directive C1067-D, AN/TPS-63 Product Improvement	Revised Annually

304.11 Radar Set, 3D, AN/TPS-59

304.11.1 Requirement. The Marine Corps requires a helicopter transportable, long-range, three-dimensional air surveillance radar to replace the Radar Set, AN/TPS-22D.

304.11.2 Concept of Employment. The AN/TPS-59 radar is employed by the Marine air control squadrons as the primary sensor for the TAOC. It provides surveillance out to 300 nautical miles up to an altitude of 100,000 feet. It provides capabilities for surveillance, ground control intercept missions, and air traffic control.

304.11.3 System Description. The AN/TPS-59 is a solid state, long-range, 3D, L-band, air surveillance, phased array radar with an IFF capability. It is mounted in two modified S-241 helicopter transportable shelters and three antenna trailer assemblies. An additional transport shelter is provided for field maintenance. It has computer-controlled performance monitoring and fault isolation. The AN/TPS-59 is compatible with the AN/TYQ-2 Tactical Air Operations Central and the AN/TYQ-23 TAOM.

304.11.4 Acquisition Strategy and Schedule. The AN/TPS-59 was fielded in August 1985. A contract was awarded in 1981 for the development of an anti-radiation missile countermeasures (ARM-CM) capability. A production contract for the ARM-CM was awarded in 1986.

A product improvement program was initiated in 1984. This program includes the development of a threshold mapper to increase the radars' detection capability, a spectrum analyzer to assist the radar in selection of transmission frequencies, and completion of the interface with the TAOM. Future plans include improvement of the AN/TPS-59 capabilities in an ECM environment, improvement of its moving target indicator capabilities, and increases in system performance. The TAOM interface, development of the threshold mapper, and development of the spectrum analyzer are planned for completion by 1989.

304.11.5 Documentation

Document	Date
SOR CC-11.6, Lightweight, Three-Dimensional Ground Control Intercept Radar	17 Feb 66
Acquisition Decision Memorandum, MSARC IIIA, AN/TPS-59 Radar Set	31 Aug 83
RDT&E Work Directive C1067-C, AN/TPS-59 Product Improvement	Revised Annually

304.12 Radar Set AN/TPS-32

304.12.1 Requirement. The AN/TPS-32 Radar is a second long range air search radar employed by the TAOC. It is a helicopter transportable, 3-dimensional radar set capable of detecting aircraft at ranges up to 300 nautical miles and at altitudes up to 100,000 feet. It is currently subject to a product improvement program to extend its service life to the year 2000 by improving its reliability, maintainability, and survivability.

304.12.2 Functions. The AN/TPS-32 is employed by the MACS as an automatic 3-D surveillance radar compatible with the AN/TYQ-2-configured TAOC and the TAOM. When operating in conjunction with the TAOC, it automatically furnishes 3-D digital target data and associated IFF/selective identification feature (SIF) data in digital message format and display video to the TAOC. It will continue to be one of the primary sources of long-range sensor information by providing frequency diversity with other MACCS radars. The AN/TPS-32 operates in the S-band; other TAOC-associated radars operate in the L-band.

304.12.3 System Description. The AN/TPS-32 Radar is a lightweight, transportable radar used to provide aircraft range, azimuth, and altitude data. In its operating mode, it consists of the antenna on its pedestal and three shelters. In the transport mode, the set consists of three pallets of

approximately 12'x6'x6', one operations shelter, and two transmitter shelters of approximately 8'x6'x6'.

The AN/TPS-32 is compatible with the AN/TYQ-2. A prototype modification has been installed to provide an interface with the AN/TYQ-23 TAOM.

304.12.4 Acquisition Strategy and Schedule. The AN/TPS-32 was fielded in 1971. It is now subject to a continuing product improvement program to increase its mean time between failure (MTBF), to decrease its mean time to repair (MTTR), and to increase its survivability.

A contract was awarded to ITT Gilfillan in 1982 to produce an ARM-CM modification for the AN/TPS-32. Other improvements include:

- Development of an improved digital transmitter control unit (TCU) with built-in-test capabilities.
- Develop a solid state receiver.
- Improvements to the moving target indicator.
- Evaluation of a fiber optic link between the radar and the TAOC.
- Installation of a closed loop air conditioning system.
- Installation of an adaptive video processor.

304.12.5 Documentation

Document	Date
SOR CC-11.6, Lightweight, Three-Dimensional, Ground Control Intercept Radar	17 Feb 66
CDR NAVELEX ltr ELEX 2011D, MEB, Ser:42-2011D Acquisition Plan 86-6 (Confidential)	23 Mar 82
RDT&E Work Directive C1067-B, AN/TPS-32 Product Improvement	Revised Annually

304.13 Hawk Missile System

304.13.1 Requirement. The Hawk guided missile system is the Marine Corps primary low-to-medium altitude air defense system.

304.13.2 Concept of Employment. The Hawk missile system is organic to the light antiaircraft missile (LAAM) battalion. The mission of the LAAM battalion is to provide surface-to-air missile defense of assigned areas of operation, or installations and vital zones, against hostile low and medium altitude air attacks. Coordination and control of battalion operations are

generally exercised through the TAOC. The Hawk battery is normally deployed as a complete battery. However, to provide increased flexibility and to increase area coverage by the system, the battery can be divided into two assault fire units: the base platoon (battery minus) and an assault fire platoon.

304.13.3 System Description

a. Functions. Command and control functions and interoperability with other MACCS systems are functions of the Battery Control Central (BCC) AN/TSW-13, and the Information Coordination Central (ICC) AN/MSQ-111 at the battery level; and the Platoon Command Post (PCP) AN/MSW-18 for the assault fire units (AFUs).

(1) Functions performed at the BCC and ICC include:

- Automatic correlation of IFF returns and operator observation of the IFF data.
- Automatic threat evaluation.
- Tactical control officer decision including coordination with the TAOC.
- Automatic designation of firing section.
- Monitoring the engagement.
- Target intercept evaluation.

(2) Functions performed at the AFU are substantially the same with the PCP consisting of essential elements of the BCC and ICC combined in a single shelter, but with reduced capabilities.

b. Interoperability. Hawk batteries and AFUs use the Army Tactical Data Link-1 (ATDL-1) interface with the TAOC configured with the AN/TYQ-2 and AN/TYQ-3A or with the AN/TYQ-23 TAOM.

c. Major Items of Equipment. Major items consist of:

(1) The Battery Control Central, AN/TSW-13 contains the equipment required for remote control and operations of the radars and for the firing of the missile. It is operated by a crew of five under control of a tactical control officer. The BCC contains the displays and indicators used during an engagement to detect, identify, evaluate, assign, and fire on targets.

(2) The Information Coordination Central, AN/MSQ-111 functions as the battery fire control data processing and operational communication center.

(3) The Platoon Command Post, AN/MSW-18 is used to monitor and control AFU firing operations. It houses a tactical display and engagement control console and a computer, IFF, and communication equipment identical to those contained in the ICC.

(4) The Pulse Acquisition Radar, AN/MPQ-50 is a medium and low altitude search radar.

(5) The Continuous Wave Acquisition Radar, AN/MPQ-55 provides the capability to detect aircraft at low altitudes in the presence of heavy clutter.

(6) The Range Only Radar, AN/MPQ-51 establishes the range to a target when the High Power Illuminator Radar, AN/MPQ-57 is unable to obtain range information because of enemy countermeasures.

(7) The High Power Illuminator, AN/MPQ-57 automatically acquires and tracks designated targets in azimuth, elevation, and range rate. The radar also provides radar energy reflected from the target that is received by the Hawk missile for guidance.

(8) The Launcher, XM-192-1 is the Hawk missile launcher. It aims the missile in azimuth and elevation, applies prelaunch commands, and launches the missile.

(9) The Launcher Section Control Box, AN/GSA-132 generates missile and launcher status signals for display on its panel and at the BCC. A Safe/Operate switch prevents remote operation of the launchers while reloading or maintenance functions are being performed.

(10) The Missile Handling Group includes the necessary equipment for reloading the launcher.

(11) The Missile, MIM-23B is the Hawk missile.

304.13.4 Acquisition Strategy and Schedule. The U.S. Army and Marine Corps fielded the Hawk missile system in the early 1960s. Since that time, major improvements have been made through three subsequent product improvement programs (PIPs). Fielding of the Hawk Phase III PIP is scheduled to be completed in 1990. This PIP will involve modification to existing equipment and deletion of several major end items.

The Marine Corps is monitoring in the U.S. Army's Mobile Surface-to-Air Missile System (MSAMS) in an effort to develop evolutionary modifications to the Hawk system. Such a modified Hawk system may fulfill the Marine Corps MSAMS requirements for the 1995-2000 time frame.

304.13.5 Documentation

Document	Date
ST 44-170-4, Hawk Air Defense Guided Missile System, U.S. Army Air Defense School, Ft. Bliss, Texas	Jul 84
FMFM 5-5, Antiair Warfare	Nov 86

Document	Date
ROC AAS 1.01, Mobile Surface-to-Air Missile System (MSAMS)	8 Dec 76
Specification No. MIS-35279, System Specification (Type A) for the Improved HAWK Phase III Battery (U) (Document Confidential)	Apr 84
Specification No. MIS-35274, System Specification (Type A) for HAWK Phase III (U), Revision D, (Document Confidential)	May 84
United States Army Combat Developments Command, Dept. of the Army Approved MN(P)-R for Improved HAWK Air Defense Guided Missile System (U) (Document SECRET)	28 Apr 72 w/change 1 2 May 73
Marine Corps RDT&E Work Directive C1120-A, HAWK Missile System	Revised Annually
Marine Corps RDT&E Work Directive C1120-C, Mobile Surface-to-Air Weapons System (MSAWS)/HAWK Evolution	Revised Annually

305 MARINE AIR-GROUND INTELLIGENCE SYSTEM (MAGIS)

305.1 Requirement. Developments in communications, reconnaissance, surveillance, and target acquisition techniques and equipment have greatly increased the capabilities of the FMF to collect intelligence information. The Marine Corps has an operational requirement for a semiautomated tactical intelligence system that will enable intelligence staffs to process the large quantities of information collected into timely, accurate, and pertinent intelligence. The system must also facilitate the effective management of the collection effort and the rapid dissemination of intelligence to the appropriate commanders.

305.2 Concept of Employment. A broad, general description of the concept of employment of MAGIS is contained in chapter II. Additional details concerning the employment of each segment are included in the following sections.

305.3 System Description. MAGIS is the conceptual architecture in which all Marine Corps intelligence systems function. It consists of modular, functional segments that employ equipment, procedures, techniques, and trained personnel to meet operational requirements. Automated assistance is provided where suitable, feasible, and acceptable. Segments are configured to have the mobility required to support MAGTF organizations with which they may be deployed. Principal elements of MAGIS are:

- Intelligence Analysis Center (IAC), AN/TYQ-19(V).
- Imagery Processing (IP) Segment, ES-40.
- Imagery Interpretation (II) Segment, AN/TYQ-12(V)2.
- Tactical Electronic Reconnaissance Processing and Evaluation System (TERPES), AN/TSQ-90B.
- Integrated Signals Intelligence System (ISIS).
- Joint-Source Imagery Processor (JSIP), a developmental system planned to replace the ES-40 IP and the AN/TYQ-12(V)2 IFF in the early 1990s.
- Tactical Intelligence Management System (TIMS), a developmental system that will provide automated intelligence processing capabilities to MABs, MAUs, and selected echelons below the MAGTF headquarters level.

Other items of intelligence equipment included under the MAGIS concept are:

- Interrogator Transponder Set, AN/USQ-80 (Forward Pass).
- Tactical Remote Sensor System (TRSS).
- Electronic Intelligence (ELINT) Support System (ESS).
- Advanced Marine Airborne Signals Intelligence (SIGINT) System (AMASS).

- Mobile Electronic Warfare Support System (MEWSS).
- Countermeasures Set, AN/ULQ-19.
- Team Portable Direction Finder (TPDF), AN/PRD-10.
- Sensor Monitoring Central, AN/USQ-66(V).
- Phase III Southeast Asia Operations (SEAOPS) Unattended Ground Sensors (UGSs).

System relationships are depicted in Figure 3-13. Additional information concerning the IAC, TERPES, IP, and IIF are contained in Marine Corps Operational Handbook (OH) 2-1, Marine Air-Ground Intelligence System (MAGIS).

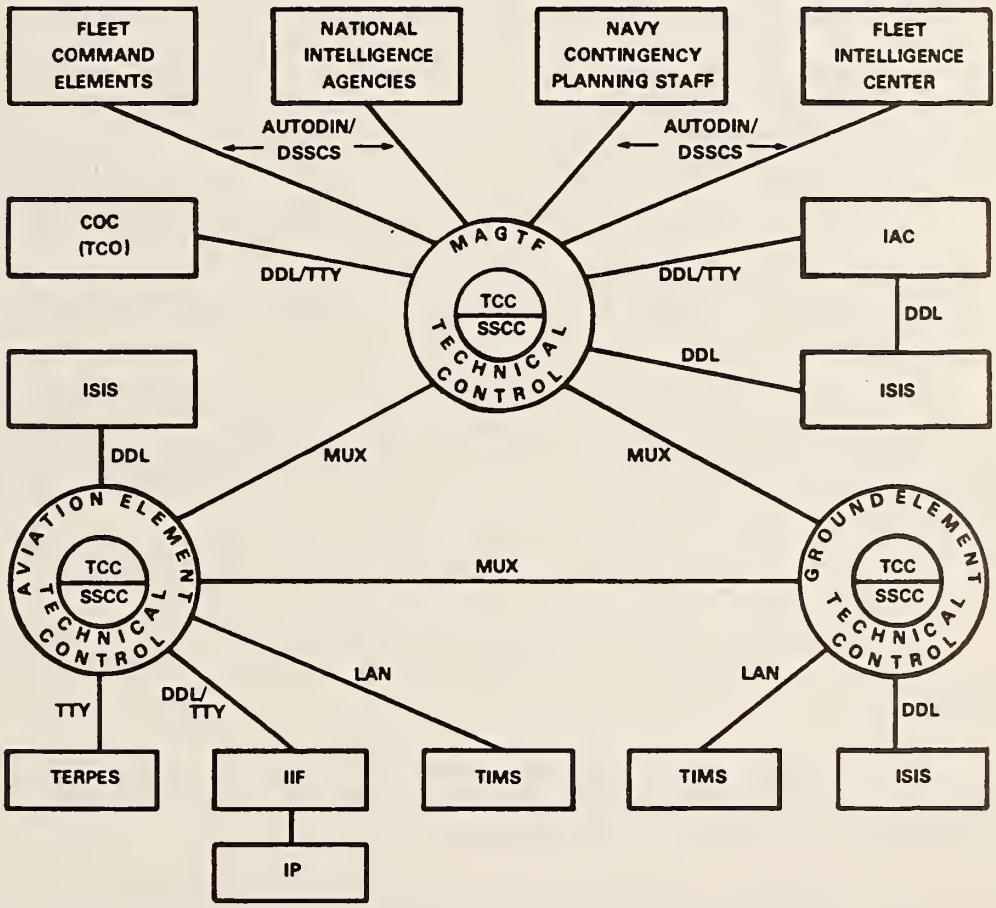

Figure 3-13. MAGIS Interfaces

305.4 Intelligence Analysis Center (IAC) AN/TYQ-19. The IAC is the heart of MAGIS. Information from the II; TERPES; ISIS; division and wing intelligence centers; Navy, other Service, theater and national assets; and other sources is provided to the IAC where it is processed into intelligence. In addition to its processing capabilities, the IAC aids in the management of the collection effort and the dissemination of intelligence.

305.4.1 Concept of Employment. The IAC normally will be deployed only with MAF-sized MAGTFs. Other intelligence centers will be provided with automated support, where appropriate, by other systems. Intelligence generated within the IAC will be distributed to lower echelons through TCO or special intelligence channels. Combat information from subordinate echelons will be funneled up through the same channels. Until TCO is fielded, IAC-originated messages to be distributed to lower echelons will be disseminated by the general service tactical communication center (TCC), the special security communication center (SSCC), or secure voice circuits.

IAC segments have been provided to:

- Headquarters I MAF.
- Headquarters II MAF.
- Headquarters III MAF.
- Navy and Marine Corps Intelligence Training Center, Dam Neck, VA.
- Marine Corps Supply Center, Barstow, California (2).
- Tactical Information Systems Integration Facility (TISIF).

The Joint Intelligence Center (JIC) on LHAs is being retrofitted by the Navy with the AN/SYQ-9(V)3 data processing system. It is essentially a MAGIS IAC. LHDs, currently under construction, are being equipped with the same system. The AN/SYQ-9(V)3 will also be incorporated into the JIC of LCCs under the Navy WIP.

305.4.2 Functions. Major functions performed by the IAC are:

a. Automation of the reception, recording, and internal routing of intelligence data, both collateral and sensitive compartmented information (SCI).

b. Automation of selected data manipulation functions to support the evaluation, analysis, integration, and interpretation of intelligence information by intelligence analysts.

c. Automated assistance for efficiently managing the processing of collected information and coordinating the resultant intelligence with other related activities.

d. Automated assistance to ensure the intelligence support required for fast, effective coordination of the special intelligence and electronic warfare resources of the command.

305.4.3 Interoperability. The IAC interfaces with other TDSs and intelligence sources will be through the MAF general services communication center and SSCC. A semiautomated interface with TCO will be required. Direct digital data and teletypewriter links between other segments of MAGIS and the IAC will be available with the fielding of IAC software release III in FY87.

305.4.4 Major items of Equipment. The IAC is housed in three 8'x8'x20' shelters: an automated data processing/communications (ADP/COMM) shelter and two analyst shelters. Each analyst shelter contains four analyst workstations. The ADP/COMM shelter houses command, control, and ADP equipment.

305.4.5 Acquisition Strategy. The IAC production contract was awarded to the American Development Corporation in December 1982. All systems have been delivered to the FMF. A full operational capability was achieved in 1985.

An IAC PIP was initiated in 1985. The ongoing software PIP for the IAC will give the system the ability to process JINTACCS-formatted messages, increase external communication links to four digital data links--two of which will be dedicated to special intelligence (SI) traffic--and three teletypewriter lines, provide AUTODIN Mode 1 protocol, and increase the speed and flexibility of data base manipulation.

A design to reduce the physical size of the IAC is currently undergoing concept development. The desired size is one 8'x8'x10' shelter vice the current three 8'x8'x20' shelters. The maximum acceptable size of the reduced-size IAC would be two 8'x8'x10' shelters.

305.4.6 Acquisition Schedule. The ongoing IAC PIP is scheduled to be completed by September 1987.

305.4.7 Personnel and Training Requirements. IAC personnel and training requirements are documented in detail in OH 2-1.

305.4.8 Documentation

Document	Date
SOR CCC-1.08R, Intelligence Analysis Center Segment of MAGIS	12 Jun 75
OH 2-1, Marine Air-Ground Intelligence System (MAGIS)	16 Mar 82
MAGIS IAC, AN/TYQ-19, Integrated Logistic Support Plan (MAGIS IAC ILSP), Third Revision	Jul 84

305.5 Tactical Electronic Reconnaissance Processing System (TERPES) AN/TSQ-90. TERPES is a TDS consisting of equipment, personnel, and procedures capable of receiving, processing, evaluating, and reporting tactical electronic reconnaissance information and jamming data received in the form of digital data tapes and crew logs from the EA-6A/B aircraft.

305.5.1 Concept of Employment. There are five TERPES, three of which are assigned to Marine Tactical Electronic Warfare Squadron 2 (VMAQ-2) with the Second Marine Aircraft wing (MAW) at Marine Corps Air Station, Cherry Point, North Carolina. TERPES segments are deployed with VMAQ detachments, one of which is regularly deployed in support of III MAF. The fourth TERPES is assigned to the Pacific Missile Test Center (PMTC), Point Magu, California and serves as the software support activity facility. The fifth TERPES is assigned to the reserve VMAQ-4 located at Whidbey Island, Washington.

Processed intelligence data is provided to the MAW intelligence center and the IAC at the MAF headquarters.

305.5.2 Functions. Major functions performed by the TERPES are:

a. EA-6A/B aircraft mission tape data reduction, analysis, and report preparation.

b. EA-6A/B mission planning, briefing, and debriefing.

c. Tactical jamming analysis.

d. Electronic order of battle (EOB) data base maintenance.

305.5.3 Interoperability. The interface of the EA-6A/B with TERPES is effected by the manual transfer of the data tapes from the aircraft to TERPES after the aircraft has completed its mission and returned to its base. A tactical digital data link between the airborne EA-6A/B aircraft and TERPES is a probable future interface. TERPES is linked to the IAC through the TCC.

305.5.4 Major Items of Equipment. Each TERPES is housed in three 8'x8'x20' shelters: a computer system shelter, a support shelter, and a data analysis shelter.

305.5.5 Acquisition Strategy. A TERPES update plan was published in October 1979 to make the system compatible with the EA-6B aircraft. The upgrade system specification was published in December 1980. Retrofit production, software acceptance, operational testing, and deployment with VMAQ-2 were completed in 1986.

305.5.6 Acquisition Schedule. TERPES is operational with all systems presently fielded.

305.5.7 Personnel and Training Requirements. Personnel and training requirements are described in detail in OH 2-1, Marine Air-Ground Intelligence System (MAGIS).

305.5.8 Documentation

Document	Date
TERPES Requirement to be Fulfilled by Upgrading AN/TSQ-90. CMC Work Directive C062-0-01-7	2 Dec 76
TERPES User's Manuals, Vols I through VI. Pacific Missile Test Center (PMTC), Point Mugu, CA	30 Mar 79
OH 2-1, Marine Air-Ground Intelligence System (MAGIS)	16 Mar 82

305.6 Imagery Interpretation (II) Segment, AN/TYQ-12(V)2. The II provides the imagery interpreter with a computer-assisted capability to rapidly and accurately exploit hardcopy photographic, infrared, and radar imagery. It also produces formatted interpretation reports, plots, and other products.

305.6.1 Concept of Employment. There are five II segments. Two segments are located with the 2d MAW, two segments with the 3rd MAW, and one segment with the 1st MAW. The segments are assigned to the respective MAW G-2 sections.

305.6.2 Functions. The II segment allows for the semiautomated exploitation of hard-copy tactical imagery and the formatting of related message reports.

305.6.3 Interoperability. The II segment can communicate with the IAC through a digital link. Communications to the MAGTF headquarters and other activities will normally be via the MAW and MAGTF TCC.

305.6.4 Major Items of Equipment. Each II segment consists of a single 8'x8'x20' shelter that contains two photo interpretation consoles, a supervisory position, computers, and peripheral equipment.

305.6.5 Acquisition Strategy. The II segment is currently in use in the FMF. The Joint-Source Imagery Processor (JSIP) is scheduled to replace the II and IP in 1991.

305.6.6 Personnel and Training Requirements. Personnel and training requirements for the II segment are covered in OH 2-1.

305.6.7 Documentation

Document	Date
SOR CCC-1.04, Imagery Interpretation	11 Apr 72
OH 2-1, Marine Air-Ground Intelligence System (MAGIS)	16 Mar 82

305.7 Imagery Processing Segment (IP) ES-40A. The IP segment provides the capability to process photographic and infrared imagery taken by photographic reconnaissance aircraft. The IP does not process or reproduce side-looking airborne radar (SLAR) film unless the film has already received initial processing by the SLAR correlator processor.

305.7.1 Concept of Employment. There are six IP segments, all of which are assigned to Marine Tactical Reconnaissance Squadron (VMFP-3) at Marine Corps Air Station, El Toro, California. One IP segment is deployed with the 1st MAW. The IP segment can process imagery from the RF-4B, OV-10, and AV-8 aircraft.

Table 3-4. IP Segment Processing Capabilities

TYPE PRODUCT OR SERVICE	TIME PERIOD	IMAGERY PROCESSING REQUIREMENTS	
		4-AIRCRAFT DETACHMENT (6 MISSIONS)	7-AIRCRAFT DETACHMENT (11 MISSIONS)
Sustained processing of original film	Daily	13,800 ft	25,300 ft
Maximum rate processing of original film	Hourly	2,300 ft	4,000 ft
Sustained production of duplicate positive transparencies	Daily	41,400 ft	75,900 ft
Maximum rate production of duplicate positive transparencies	Hourly	2,400 ft	4,00 ft
Production of duplicate negative transparencies	Daily	13,800 ft	25,300 ft
Film titling and cleaning	Daily	13,800 ft	25,300 ft
Film editing and inspection	Daily	69,000 ft	126,500 ft
Production of contact prints	Daily	575 each	1,000 each
Production of 2x enlargements	Daily	575 each	1,000 each
Production of custom enlargements	Daily	15 each	25 each

305.7.2 Functions. Possible imagery processing requirements met by the IP segment are listed in Table 3-4.

305.7.3 Interoperability. Finished film is provided to the II segment. Prints and enlargements are provided to the MAGTF headquarters, GCE, ACE, and CSSE as required within system capabilities.

305.7.4 Major Items of Equipment. An IP segment consists of three 8'x8'x20' shelters: one administration/quality control shelter and two processing shelters.

305.7.5 Acquisition Strategy. Imagery processing segments are currently in use in the FMF. The JSIP is programmed to replace the IP and II in 1991.

305.7.6 Personnel and Training. Personnel and training requirements for the IP segment are covered in OH 2-1.

305.7.7 Documentation

Document	Date
Decision to Fulfill IP Requirement by Upgrading the ES-40	2 Dec 76
OH 2-1, Marine Air-Ground Intelligence System (MAGIS)	16 Mar 82

305.8 Joint-Source Imagery Processor (JSIP). The JSIP--formerly named the All-Source Imagery Processor (ASIP)--will be a mobile ground processing facility designed to receive and exploit, in near real time, SLAR, infrared, and electro-optical camera imaging received from reconnaissance aircraft, RPVs, and from national and theater resources.

305.8.1 Concept of Employment. The JSIP will replace the IP and II segments of MAGIS.

305.8.2 Functions. JSIP will exploit soft-copy digital imagery data linked to it from aircraft or other sensor platforms. Soft-copy imagery exploitation will allow the imagery interpreter to extract, in a far more timely manner, much more information than is normally attainable in film-based imagery. The JSIP will meet Marine Corps requirements for:

- Imagery throughput rates.
- Data storage.
- Sensor processing.
- Size, weight, and mobility.

305.8.3 Interoperability. Interfaces between sensor platforms and JSIP will be a UPD-8 digital data link. The interface between JSIP and IAC will be provided by SSCC/Special intelligence communications (SPINTCOMM).

305.8.4 Major Items of Equipment. JSIP will comprise five 8'x8'x10' shelters, two antennae, and related power and environmental units.

305.8.5 Acquisition Strategy. A ROC for ASIP was published in 1982. An advanced development model (ADM) was built and development testing completed during 1984 and 1985. Data acquired during ASIP ADM testing was combined with technology from other Service systems to produce an engineering development model (EDM) specification. During FY 1987, a contractor will be selected to build an EDM. The EDM will incorporate, as much as possible, common hardware and software from other-Service systems. MSARC II, held in 1985, approved the formation of a joint USAF/USMC ASIP/Advanced Deployable Digital Imagery Support System (ADDISS) program office of the Electronics Systems Division at Hanscom Air Force Base, Massachusetts. This program was joined by the Army in December 1986. The Tri-Service System has been named the Joint Service Information Processor (JSIP). The Navy has promulgated a tentative operational requirement (TOR) that allows participation in the program.

305.8.6 Acquisition Schedule. Significant events in the ASIP acquisition program are:

Event	Date
ROC INT 1.24, All-Source Imagery Processor published	16 Jun 82
ASIP ADM built and factory tested	FY84
ASIP ADM DT-1 complete	FY85
MSARC II	4th Qtr, FY85
EDM Request for Proposals issued	2nd Qtr, FY87
EDM contractor selection	3rd Qtr, FY87
MCPDM III	3rd Qtr, FY90
IOC	3rd Qtr, FY91

305.8.7 Personnel and Training. To be determined.

305.8.8 Documentation

Document	Date
ROC Int 1.24, All Source Imagery Processor - HQMC	16 Jun 82
ASIP Acquisition Plan - DPO	1 Apr 83

305.9 Tactical Intelligence Management System (TIMS). TIMS will be a system of hardware, software, and procedures to support intelligence functions of direction, collection, processing, and dissemination at appropriate MAGTF headquarters not supported by an IAC.

305.9.1 Concept of Employment. TIMS will be employed to assist with the performance of intelligence functions at MAB and MAU headquarters, and subordinate elements of MAFs and MABs; e.g., air, ground, and combat service

support element headquarters; regiments; battalions; and aircraft groups and squadrons.

305.9.2 Functions. TIMS testbed equipment was provided to selected FMF units in June 1986 for a one-year evaluation of functions to be performed and a determination of the type and quantity of equipment required to provide the desired level of support. The focus of the testing is on functions required to support a MAB-level headquarters on the assumption this will pose the most demanding requirements. Functions to be performed will include maintenance of the journal and order of battle files and the preparation of reports.

305.9.3 Interoperability. Interfaces with other TDSs will be via transfer of storage media or by secure voice radio.

305.9.4 Major Items of Equipment. TIMS will be of modular design allowing system configuration to meet requirements of the supported unit. Testbed equipment consisting of a TEMPEST-certified microcomputer, disk drive (hard and floppy), printer, and software have been fielded. Actual equipment and configuration of TIMS will be based on test results.

305.9.5 Acquisition Strategy. A TIMS ROC and type "A" specification will be prepared based on test results and will be released for staffing in FY87.

305.9.6 Acquisition Schedule. To be determined.

305.9.7 Personnel and Training. To be determined.

305.9.8 Documentation

Document	Date
HQMC Draft Justification for System New Start (JSNS), Tactical Intelligence Management System	28 Nov 84
Work Directive C0062-B, Tactical Intelligence Management System (TIMS)/86) (Revised Annually)	18 Sep 85

305.10 Integrated Signals Intelligence System (ISIS). ISIS will be a semiautomated, tactical SIGINT collection, analysis, and reporting system designed to provide MAGTF and subordinate commanders with timely, accurate SIGINT support in the form of combat information and combat intelligence.

305.10.1 Concept of Employment. ISIS will be employed by FMF radio battalions to provide tactical SIGINT and EW support to MAGTF headquarters and subordinate ground and aviation units. ISIS will replace all existing transportable communication signals intercept and direction-finding (DF) equipment in the radio battalions except for man-pack and team-portable systems. An ISIS will consist of communication collection out stations (CCOs) to perform intercept and DF functions, and stand-alone analysis subsystems (SAASs) to perform analysis and reporting functions. The CCOs and SAASs are task-organized into direct support units, along with other radio battalion assets, to provide required support to elements of the MAGTF. A SAAS also

will provide automated support for the radio battalions' operations control and analysis center (OCAC).

305.10.2 Functions. ISIS integrates mini/microcomputer processing with current intercept receiver and radio DF technologies to enhance SIGINT support by making the collection, processing, analysis, and report preparation and dissemination more responsive to the needs of the commander. Selective automation of functions and procedures now performed manually will free intercept and analysis personnel from time-consuming, repetitive tasks, thereby providing more time for analysis and performance of functions best performed by the operators.

305.10.3 Interoperability. The ISIS element located at the MAGTF headquarters will have a digital data link with the IAC. Interfaces with other systems will be via digital data link or secure voice channels.

305.10.4 Major Items of Equipment. The two principal components of ISIS will be the SAASs and the CCOs.

The Marine Corps is acquiring the Army's Technical Control and Analysis Center (TCAC), AN/TSQ-130 to provide an interim automated analysis system for the radio battalions. Consideration is also being given to acquiring an off-the-shelf system developed by one of the other Services to provide a CCO capability.

305.10.5 Acquisition Strategy. Initiation of unilateral development of the Marine Corps SAAS was deferred indefinitely in 1985. A survey was conducted for a system to fill the SAAS functional requirement, and the TCAC was selected as an interim replacement. The TCAC has received approval for Service use and will enter production in FY 1987. The CCO underwent technical evaluation by the Naval Electronic Systems Engineering Center (NESEC), Vallejo, California. It was found to be unsuitable for Marine Corps use. An alternative will be selected in FY87. The future strategy for CCO acquisition will depend on the system selected to fulfill the requirement.

305.10.6 Acquisition Schedule. The schedule of principal events in the acquisition of ISIS are listed below by fiscal year.

a. FY 1985

(1) Survey for systems to fulfill SAAS functional requirement.

(2) TCAC chosen for further testing.

(3) TECHEVAL and OPEVAL on TCAC conducted.

(4) CCO evaluation began at Vallejo.

(5) NSA approved reprogramming of TCP RDT&E for one TCAC system

(6) Termination of ISIS FSD with Sanders Associates, Inc., Nashua, NH.

b. FY 1986

(1) Completed CCO evaluation and cost estimate.

(2) Decision made to seek CCO alternative.

(3) Began survey for alternative to CCO.

(4) Obtained ASU for TCAC.

(5) Began participation in TCAC Users Group (TUG).

c. FY 1987

(1) Begin TCAC production.

(2) Conduct user evaluation of candidate CCO systems.

(3) Identify CCO objective system and develop system acquisition strategy.

d. FY 1988

(1) Complete production and fielding of TCAC.

(2) Complete ILS of selected collection capability.

(3) Achieve Milestone III for alternative CCO system.

e. FY 1989-92

(1) Begin evolutionary PIPs of TCAC.

(2) Decide on future implementation of analytic capability.

(3) Complete production of alternate CCO system and field.

305.10.7 Personnel and Training Requirements. To be determined.

305.10.8 Documentation

Document	Date
ROC INT 1.25, Integrated Signals Intelligence System (ISIS)	16 Mar 83
RDT&E Work Directive CCC27AO, Integrated Signals Intelligence System (ISIS)	Revised Annually
Statement of Work (SOW) for production of the TCAC for the Marine Corps.	Sep 86

305.11 Other MAGIS Segments

305.11.1 Tactical Remote Sensor System (TRSS) Phase V PIP. TRSS Phase V PIP is an unattended ground sensor set of equipment that provides real-time information on enemy direction of movement, speed, and force structure. TRSS Phase V PIP consists of hand- and air-emplaced sensors, radio relays, and monitoring equipment. It will replace the current Marine Corps ground sensor system known as Phase III SEAOPS. The prime objective of the TRSS Phase V program is to decrease the bulk, weight, and unit cost of the Phase III components through exploitation of miniaturization techniques. In addition to seismic, magnetic, and infrared sensors, other techniques such as NBC warning, day/night imagery, helicopter sensors, and snow environment sensors are being explored for possible inclusion in the system.

The Interrogator Transponder Set, AN/USQ-80 (Forward Pass) will provide ground sensor data storage and data relay for TRSS Phase V.

System requirements are documented in ROC INT 1.96, Tactical Remote Sensor System (TRSS), dated 4 January 1977. RDT&E Work Directive C1297-B, Phase V Ground Sensor Elements (GSEs) Product Improvement Program (PIP), revised annually, describes the current and future status of the system.

Developmental and Operational Testing of the TRSS full-scale engineering development model is planned for FY 1987 with the production decision in FY89 and an IOC in FY91.

305.11.2 Interrogator Transponder Set, AN/USQ-80 (Forward Pass). Forward Pass is a ground sensor data storage and relay device that is a subsystem of the Marine Corps Tactical Remote Sensor System (TRSS) Phase V PIP. Forward Pass provides the capability to obtain sensor intelligence without the need for continuous real-time monitoring. The five major components of Forward Pass are:

- A storage unit.
- An interrogation unit.
- A recovery unit.
- A processor interface unit.
- A memory unit.

The storage unit can be air-delivered or hand-emplaced in the radio line-of-sight of the sensor field. It receives, time tags, and stores the sensor data. On command from an interrogation unit mounted in a high performance aircraft, the storage unit transmits its stored data. The interrogation unit receives and records the data, which can then be retransmitted to the recovery unit at the ground site where they are recorded by the memory unit. The data are then physically transferred to the processor interface unit, which makes the data available to TRSS Phase V readout equipment for processing into sensor intelligence. The transmission of sensor-derived data from the sensor monitoring central to the supported unit intelligence section

will normally be accomplished over the existing supported unit's internal communications. Sensor monitoring centrals collocated with the command post of a supported regiment may be connected directly by wire with the regiment's FSCC and the FDC of the artillery battalion in direct support of the regiment.

The principal use of Forward Pass will be in advance force operations preceeding an amphibious assault and in subsequent operations ashore. With Forward Pass, remote sensors can be employed in the amphibious objective area days or weeks before the assault and readouts can be made periodically to gather the collected sensor data.

The requirement for Forward Pass is documented in ROC INT 1.06, Tactical Remote Sensor System (TRSS), dated 4 January 1977. RDT&E Work Directive C1297-A, Forward Pass, revised annually, describes the current and projected status of the system.

The Marine Corps plans to procure four Forward Pass systems, two in FY92 and two in FY93.

305.11.3 Electronic Intelligence (ELINT) Support System (ESS). The ESS is a modular, semiautomated, transportable, tactical ELINT system capable of intercepting, locating, analyzing, and identifying enemy ground-based non-communications emitters. It is a computer-controlled, monopulse, precision line-of-bearing, and signal identification system designed to operate as a stand-alone system. The ESS will be configured as ELINT collection outstations (ECOs), mounted on organic radio battalion tactical vehicles, and as airborne collection platforms (ACPs). The ECOs will be deployed with radio battalion direct support units and will be linked via a UHF digital data link. This same link will tie the ACPs with the ground-based systems. The interface of the ESS with the SAAS/TCAC will be at the radio battalion OCAC.

The requirement for the ESS is documented in ROC INT 1.03A, Electronic Intelligence Support System (ESS) (Confidential), dated 16 October 1980. RDT&E Work Directive CCC27FO, Electronic Intelligence Support System (ESS), revised annually, describes the current and projected status of the system.

The Marine Corps has programmed for the acquisition of 18 ESSs during FYs 1990 through 1992.

305.11.4 Advanced Marine Airborne Signals Intelligence (SIGINT) System (AMASS). AMASS is a mobile, tactical SIGINT system which will extend Marine Corps passive detection and targetting capability up to 200 km beyond the forward line of troops (FLOT). The system will consist of: An airborne receiving system that is capable of preflight programming and which can be remotely tasked during flight operations; a digital data link that will have the ability to command and control the sensor package during air operations and also serve as a real-time, point-to-point downlink for collected intelligence data; and a Mobile Ground Terminal (MGT) that will process, analyze, and report collected SIGINT data. Data received by AMASS would be processed and disseminated through the TCAC to the Intelligence Analysis Center for correlation with data from other collection systems, and for

subsequent dissemination to the MAGTF commander. Highly perishable SIGINT data would be sent directly to the tactical element command centers for immediate combat decisions.

The requirement for AMASS is documented in ROC INT 1.27, Advanced Marine Airborne Signals Intelligence (SIGINT) System, dated 15 October 1984.

The Marine Corps plans to acquire 6 AMASSs during FYs 1991 through 1993.

305.11.5 Mobile Electronic Warfare Support System (MEWSS). MEWSS will be a modular, self-contained, mobile, lightly-armored EW system capable of providing electronic warfare support measures (ESM) and electronic countermeasures (ECM) support for mobile operations in the amphibious assault and subsequent operations ashore. VHF radio will provide the interface between the MEWSS and the SAAS/TCAC.

The requirement for the MEWSS is documented in ROC INT 1.26, Mobile Electronic Warfare Support System (MEWSS), dated 27 April 1983. RDT&E Work Directive C0937, revised annually, describes the current and projected future status of the system.

The Marine Corps has programmed for acquisition of 12 MEWSSs in FY87.

305.11.6 Countermeasures Set, AN/ULQ-19. The AN/ULQ-19 is a ground-based, electronic countermeasures set used as an HF/VHF jammer. It receives and identifies enemy force transmissions, in designated modes and frequencies, and transmits necessary disruptive signals to jam enemy signals. The system is vehicular-mounted, but can be deployed in a team-portable configuration. It is currently in use by the radio battalions.

305.11.7 Team Portable Direction Finder (TPDF), AN/PRD-10. The TPDF is a modular, lightweight, team portable, battery-powered, direction finding system with the capability to intercept, identify, and locate enemy emitters in the VHF range. The TPDF can automatically or manually search the frequency spectrum until an enemy emitter is detected. Lines of bearing from any of three or more TPDFs in a net will provide an automatically computed fix of the emitter location. Up to four TPDF sets can be netted via a VHF digital data link. One of the TPDFs will act as the direction finding control and will report via secure voice radio to the radio battalion OCAC. Each radio battalion currently has 12 TPDFs.

305.11.8 Sensor Monitoring Central, AN/USQ-66(V). The AN/USQ-66(V) is the element of the Battlefield Area Surveillance System (BASS) used to monitor signals from field implanted sensors and to process the signals for subsequent analysis and evaluation. It consists of receiving, sensor monitoring, and display equipment; a power panel and controls; and recording devices. These are all installed in an air-conditioned S-141-type shelter. This shelter is being replaced during the Phase V Ground Sensor Elements Product Improvement Program with a Marine Corps Standard Shelter Program product. There are three AN/USQ-66(V)s in each sensor control and management platoon (SCAMP). The SCAMP is organic to the headquarters battalion, Marine division. A BASS may be assigned to support a MAB or each of the infantry regiments of the division.

The transmission of sensor-derived data from the sensor monitoring central to the supported unit intelligence section will normally be accomplished over the existing supported unit's internal communications. Sensor monitoring centrals collocated with the command post of a supported regiment may be connected directly by wire with the regiment's FSCC and the FDC of the artillery battalion in direct support of the regiment.

306 TACTICAL WARFARE SIMULATION, EVALUATION AND ANALYSIS SYSTEM (TWSEAS), AN/TSQ-T9(V)

306.1 Requirement. The Marine Corps requires the capability to provide computer assistance to enhance the conduct of tactical exercises in support of Marine Corps amphibious training programs. This assistance currently is provided by TWSEAS. The fielded systems are used extensively; however, they contain limited capabilities for the simulation of air operations, combat service support, and terrain model resolution. Additional refinements are required for ground combat operations and sensor detections. It also requires the capability to conduct multiple concurrent exercises and to integrate field and command post exercises. Interfaces will be required with the DCT and with selected TDSs.

306.2 Concept of Employment. Three TWSEAs have been fielded. They are:

- FMFPAC TWSEAS - I MAF, Camp Pendleton, California.
- FMFLANT TWSEAS - 2nd MarDiv, Camp Lejeune, North Carolina.
- MCDEC TWSEAS - MCDEC, Quantico, Virginia.

A fourth system is planned for the 3rd Marine Division on Okinawa. This system will use the developmental hardware from the current product improvement program.

The FMF uses TWSEAS to support training programs. MCDEC uses TWSEAS to support educational and developmental programs.

TWSEAS is used to develop mutually supporting exercise programs. The MCDEC TWSEAS functions as the network coordinating authority in matters of mutual support and interest.

TWSEAS has two independent application software programs; the Field Maneuver Controller (FMC) and the Map Maneuver Controller (MMC). A third program, the Integrated Maneuver Controller (IMC), is currently under development.

The FMC is used to support tactical exercises with troops in the field. It is employed by the tactical exercise control group (TECG) in the tactical exercise control center (TECC) for designing, controlling, and evaluating tactical exercises.

The MMC is used to support staff training exercises such as command post exercise (CPXs) and map maneuver exercises. The program simulates the operations of friendly and enemy units to provide a basis for command and staff action by the exercise participants.

The IMC program is being developed to overcome the deficiencies in the FMC and MMC described in paragraph 306.1, above.

306.3 System Description

306.3.1 Functions

a. Field Maneuver Controller (FMC) Software Package

The FMC software processes data received from umpires assigned to exercise units and provides a continuously updated picture of the exercise situation for the controllers in the TECC.

Digital messages are the primary means of data input. Umpires transmit these messages from the field using a digital message entry device (DMED) with a tactical radio. The DMED will be replaced by the AN/PSC-2 DCT.

At the TECC, the messages are translated into plain language and displayed electronically or printed out at the controllers' terminals. Data supplied in the messages are processed to maintain records of unit activity, personnel strength, attachments, troop performance, tactical effectiveness, casualties, equipment availability, ammunition levels, and supply status. These data are used to compute the units' firepower scores and combat power, which establish a basis for controlling maneuver and assessing casualties. Unit locations reported in the messages are processed for display on the automatic situation maps in the TECC.

Key information, produced during the processing of incoming messages is displayed along with the message. Information provided by the message and accompanying data, in conjunction with unit locations and schemes of maneuver displayed on the automated situation maps, provide the controllers with a picture of the exercise situation. At the controller's request, the computer will also provide comprehensive status reports of a unit's activity and the progress of a ground combat engagement.

Each controller is responsible for a specified area that includes the zone of action of a major combat unit in the landing force and opposing forces facing the landing force unit. He communicates with umpires and opposing forces over voice radio nets. In coordination with other controllers, he introduces and controls scenario events, makes assessments, derives new situations, and transmits the necessary control instructions to the landing force and opposing force umpires.

Unit controllers work closely with functional controllers in the TECC. Functional controllers control exercise play in areas such as intelligence, fire support, air operations, administration and logistics. These controllers maintain voice communications with umpires stationed in FSCCs and other functional agencies of the landing force and opposing forces.

b. Map Maneuver Controller (MMC) Software Package. The MMC software is used to support CPXs and map maneuvers. Its basic function is to simulate the operations of the absent troop units, both friendly and enemy, in order to provide a basis for command and staff actions by the exercise participants. The participants are organized in unit staffs at various echelons. Typically,

the staffs do not communicate directly with the computer, but with controllers who play the roles of the absent units.

Controllers, stationed in the TECC, communicate directly with the computer. Each controller is assigned a terminal. He translates combat orders transmitted by the staffs to prescribed message forms and enters them in the terminal. These messages are the means by which the controller directs the computer to execute combat orders of the participating staffs.

Output message formats are generally those used in combat communications. They provide key information such as unit locations and fire mission results, which the controller uses in interpreting the progress of the simulated battle and reporting it to the participating staffs. These messages furnish the basic material for providing logical, timely, and comprehensive feedback to the participating staffs, stimulating further command and staff actions.

MMC can be used in one-sided and two-sided exercises. In a two-sided exercise, two opposing forces are represented by participating staffs with the controllers responding to both sides. In a one-sided exercise, one force is represented by a participating staff with the controllers playing all roles in the opposing force and also controlling the exercise.

The MMC software simulates and reports the results of specific tactical actions such as a rifle company attack, an artillery mission, or an air strike. It also integrates these actions so that the artillery mission and airstrike influence the progress and outcome of the company attack.

The simulation outputs, as interpreted by the controllers, substitute for the information that battalion commanders and their staffs would receive from actual units in an operation. This information generates exercise play at the battalion level which in turn stimulates action at higher level staffs as the battalions submit reports and requests based on their respective situations.

c. Integrated Maneuver Controller (IMC). The IMC will support the conduct of integrated field and command post exercises in a field environment. It will also support similar exercises and multiple, simultaneous exercises in an academic environment. Exercises will include wargaming at the MAU, MAB, and MAF levels. In supporting tactical exercises, TWSEAS will generate, process, store, and display comprehensive data on both the actual and simulated operations of the opposing forces. On-line processing will be performed to provide controllers and players with continuously updated information for centralized, real-time control of exercise play. The data will be stored for retrieval as needed during the exercise and for reconstructing exercise operations for post-exercise replay and evaluation. The IMC will have the new and improved capabilities addressed in paragraph 306.1.

306.3.2 Interoperability

a. A two-way interface between the AN/PSC-2 DCT and TWSEAS is currently being developed.

b. The TWSEAS ROC states a requirement for interoperability between TWSEAS and PLRS, MIFASS, and BCS.

c. Interfaces between TWSEAS and other TDSs will be required. Whether they will be automated or manual will be assessed in terms of benefits and cost.

306.3.3 Major Items of Equipment. Table 3-5 lists major items of TWSEAS equipment. Figure 3-14 depicts a typical TWSEAS field installation.

a. A TWSEAS equipment suite is designed to function as an integrated part of a TECC headquarters, wherever this headquarters may be located for controlling an exercise, in the field or in garrison. The system, as initially configured, is housed in standard field shelters and consists of a computer shelter, a maintenance shelter, and a number of display shelters.

b. The computer shelter houses the militarized, third-generation, Navy/Marine Corps standard tactical computer (AN/UYK-7), mass storage devices (disk and magnetic tapes), and other equipment required for system operation. Equipment in the computer shelter is permanently mounted.

c. The maintenance shelter contains the test equipment, tools, and working space required by the system technicians to perform all levels of organizational maintenance.

d. The display shelters are configured for use as a TECC. It provides working space, communication terminals, and electronic display devices. Displays and terminals may be arranged in various combinations as desired to support a specific exercise. They may also be easily dismounted and moved to another facility if additional or different space is required for TECC operations.

Electronic display devices include four independent geographic displays (automated situation maps). Each is paralleled by independent, alpha-numeric (A/N) cathode ray tube (CRT) consoles for display of exercise messages and data summaries. Hard copy is provided by teletypewriters and a high-speed printer. There is also a large-screen geographic display that can be slaved to any of the control consoles.

The equipment may be used for post-exercise analysis by exercise units and other interested agencies as well as for on-line control during exercise operations. Selected portions of the exercise may be replayed electronically. In addition, message logs, data summaries, and other records are generated for permanent retention and post-exercise study.

306.4 Acquisition Strategy. A contract was awarded to Computer Sciences Corporation in May 1985 for development of the IMC. The Naval Air Development Center (NADC) has been tasked with developing the DCT-TWSEAS interface. The Naval Ocean Systems Center (NOSC) was tasked with developing the TWSEAS Input/Output Controller Microcomputer System (TICMS) and has completed that task. The TICMS replaced the 1532 Input/Output Controller. NOSC has also been

Table 3-5. TWSEAS Hardware Configuration for Network Employment

POST 1985	
FMF TWSEAS CONFIGURATION	MCDEC TWSEAS CONFIGURATION
CENTRAL PROCESSOR	
UNIVAC AN/UYK-7 (224K CORE/DD MEMORY)	UNIVAC AN/UYK-7 (244K DD MEMORY)
SYSTEM OPERATOR CONSOLE	
NOSC TICMS W/CRT AND DOT MATRIX PRINTER	NOSC TICMS W/CRT AND DOT MATRIX PRINTER
APPLICATION DISK STORAGE SUBSYSTEM	
CDC 475/1067-20 80M	CDC AN/UYH-3 80M
TERRAIN DISK STORAGE SUBSYSTEM	
UNIVAC RD-358	UNIVAC RD-358
ALPHANUMERIC/TELEPRINTER/COMMUNICATIONS PROCESSOR SUBSYSTEM	
ROLM AN/UYK-12 VT-180 PC (12)	ROLM AN/UYK-12 VT-180 PC (12)
AUTOMATED SITUATION MAP DISPLAY SUBSYSTEM	
AYDIN 5216 GEO COMPUTER (2) INTERACTIVE VIDEO DISK SYSTEM CONRAC R6B MONITORS (12) ADVENT 1110 LARGE SCREEN DISPLAY	AYDIN 5216 GEO COMPUTER (2) INTERACTIVE VIDEO DISK SYSTEM CONRAC R6B MONITORS (12) ADVENT 1110 LARGE SCREEN DISPLAY
HIGH SPEED PRINTER SUBSYSTEM	
DATAPRODUCTS TT624	DATAPRODUCTS TT624 DATAPRODUCTS 2290 (2)
DIGITAL MESSAGE ENTRY DEVICE SUBSYSTEM	
DIGITAL COMMUNICATION TERMINALS DIGITAL COMMUNICATION R/T UNIT	DIGITAL COMMUNICATION TERMINALS DIGITAL COMMUNICATION R/T UNIT
SYSTEM SHELTERS	
COMPUTER SHELTER 8′ X 8′ X 20′ MAINTENANCE SHELTER 8′ X 8′ X 12′ DISPLAY SHELTERS 8′ X 8′ 20′ (2)	COMPUTER SHELTER 8′ X 8′ X 20′ MAINTENANCE SHELTER 8′ X 8′ X 20′ DISPLAY SHELTERS 8′ X 8′ X 20′ (4)

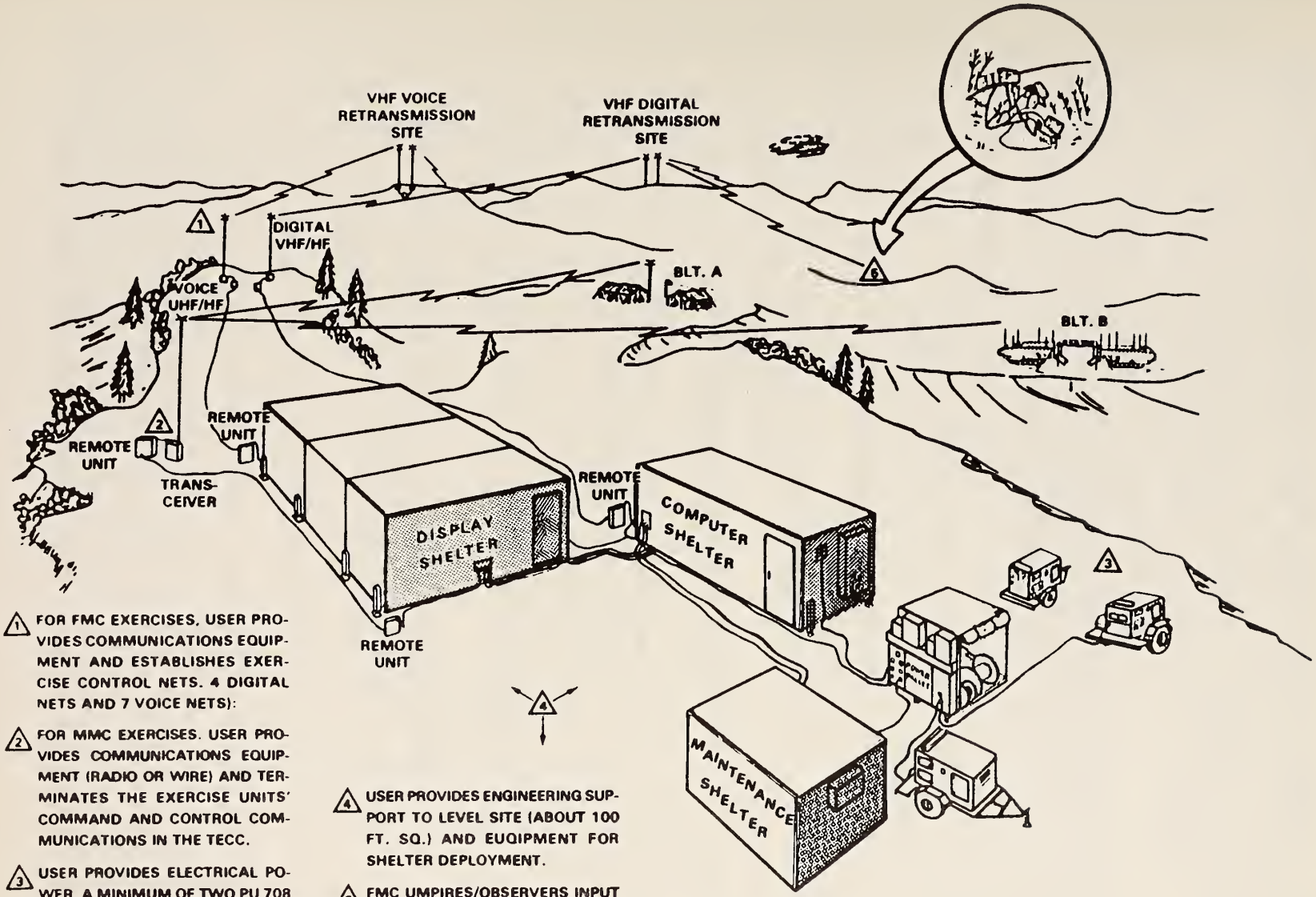

1. FOR FMC EXERCISES, USER PROVIDES COMMUNICATIONS EQUIPMENT AND ESTABLISHES EXERCISE CONTROL NETS. 4 DIGITAL NETS AND 7 VOICE NETS):

2. FOR MMC EXERCISES. USER PROVIDES COMMUNICATIONS EQUIPMENT (RADIO OR WIRE) AND TERMINATES THE EXERCISE UNITS' COMMAND AND CONTROL COMMUNICATIONS IN THE TECC.

3. USER PROVIDES ELECTRICAL POWER. A MINIMUM OF TWO PU 708 OR 710 GENERATORS OR TWO 100 AMP COMMERCIAL DROPS. 208V, 3 PHASE (Y CONNECTED). 60 CYCLE SERVICE.

4. USER PROVIDES ENGINEERING SUPPORT TO LEVEL SITE (ABOUT 100 FT. SQ.) AND EUQIPMENT FOR SHELTER DEPLOYMENT.

6. FMC UMPIRES/OBSERVERS INPUT COMPUTER FORMATTED EXERCISE ACTIVITY DATA THRU UP TO 50 DIGITAL MESSAGE ENTRY DEVICES (DMED's)

Figure 3-14. Typical TWSEAS Deployment

tasked with development of a Remote Geographic Display System to provide the capability to display selected alphanumeric and geographic data at senior echelons of the landing force.

306.5 Acquisition Schedule

Event	Date
FMFPAC TWSEAS - Established at CAMPEN	Jun 77
FMFLANT TWSEAS - Established at CAMLEJ	Oct 77
MCDEC TWSEAS - Configuration approved by CMC	Apr 78
MCDEC/FMF Network - Acquisition Plan approved by CMC	Apr 78
TWSEAS Integrated Maneuver Controller (IMC) Program - Systems Concept Description developed by MCDEC	Sep 78
MCDEC TWSEAS - Procurement initiated	Nov 78
MCDEC TWSEAS - Delivery to Quantico	Aug-Sep 81
TWSEAS IMC - Program Performance Specification (PPS) completed	Feb 83
TWSEAS IMC - Program Design Specifications (PDS) completed	Dec 83
FMF Systems - Initial equipment upgrading accomplished	Jul 84
TWSEAS Equipment upgrading accomplished	May 85
Implementation of the DCT-TWSEAS interface	Dec 86
IMC critical design review	Jan 87
IMC in-place testing	Aug 87
IMC on-site testing	Oct 87
IOC, Remote Ground Display System	Sep 87
Implementation of PLRS-TWSEAS interface	Jul 88
IOC of the IMC	Jul 88
Full operational capability with the IMC	Nov 88

306.6 Personnel and Training

306.6.1 Personnel. Each TWSEAS is supported by a tactical exercise support (TACEX) team. The teams include both Marine and civilian personnel. FMF TACEX teams have been incorporated into the FMF force structure and the MCDEC team established as a MCDEC organizational entity. The two FMF TACEX teams are identical in organization. The MCDEC team includes additional personnel for the support of the expanded role of TWSEAS for MCDEC formal schools, for

Development Center activities, and for TWSEAS life-cycle management. Composition of the FMF TACEX teams is shown in Table 3-6. The MCDEC/FMF TWSEAS Network Support Section is depicted in Table 3-7. The MCDEC Network Support Section is responsible for overall network coordination, assistance to the FMF, TWSEAS configuration control, software maintenance, establishment of an exercise analysis center, and TWSEAS total life cycle management.

306.6.2 Training. Training for members of TACEX teams is primarily on-the-job (OJT). Orientation is provided by the TWSEAS Network Support Section. Training for controllers and umpires in the use of TWSEAS is accomplished during pre-exercise schools as directed by the tactical exercise controller (TEC). TACEX teams provide instructors for training controllers and umpires.

306.7 Documentation

Document	Date
TWSEAS Technical Development Plan (TIDP)	15 Aug 72
TWSEAS ADO	18 Oct 72
TWSEAS FMF Integration Plan	28 Nov 73
TWSEAS Integrated Logistic Support Plan (ILSP)	01 Nov 74
MCO 3960.1, TWSEAS	22 Sep 75
Developmental Bulletin (DB) 7-76, (TWSEAS)	21 Jul 76
Procurement Plan	06 Feb 76
Performance Requirements, TWSEAS Integrated Software System (Draft)	24 Jun 77
Program Performance Specifications (PPS) TWSEAS Common Operating System (Draft)	01 Apr 78
CMC ltr OTTS 1/uh over 1551/8, Subj: Acquisition Plan for TWSEAS	24 Apr 78
TWSEAS Software Management Plan	30 Jul 78
System Concept Description (SCD), Integrated Maneuver Controller (IMC)	15 Sep 78
Functional Descriptions, IMC	30 Sep 78
TWSEAS ROC	09 Apr 79
Control Procedures for Tactical Exercises (Draft DB X-80)	01 Feb 80

Table 3-6. Composition of TWSEAS Tactical Exercise Support Teams

FMF TACTICAL EXERCISE SUPPORT TEAM

BILLET	MOS	GRADE	CIV
Team Commander/TWSEAS Employment Officer	0302	LtCol	–
Operations Officer	9912	Maj	–
Intelligence Officer	0202	Capt	–
Supply Clerk	3043	Cpl	–
Radio Chief	2531	LCpl	–
Team Engineer	–	–	CP
System Technician	–	–	CP
System Operator	–	–	CP
Administrative Assistant	–	–	CP

MCDEC TACTICAL EXERCISE SUPPORT TEAM

Team Commander/TWSEAS Employment Officer	9912	Maj	–
Operations Officer	9911	Capt	–
Intelligence Officer	0202	Capt	–
Simulations Officer	4002	Capt	–
Team Engineer	–	–	CP
System Technician	–	–	CP
System Technician	–	–	CP
Computer Operator	4034	Sgt	–
Team Operator	–	–	GS 4-5
Team Operator	–	–	GS 4-5
Team Operator	–	–	GS 4-5
Simulations Programmer	–	–	CP

Table 3-7. Composition of TWSEAS Network Support Section

MARINE CORPS TWSEAS NETWORK SUPPORT SECTION

BILLET	MOS	GRADE	CIV
TWSEAS Network Commander	0302	LtCol	–
Clerk Typist	–	–	GS-4
Section Head/ILS/Configuration Manager	9640	Maj	–
ILS Officer	3002	Capt	–
Supply NCO	–	Sgt	–
Technical Librarian/Admin Assistant	–	–	CP
Section Head/Plans & Tech Support	9648	Maj	–
Technical Analyst	9646	Capt	–
Operations Analyst	9650	Capt	–
TWSEAS Programmer (Head)	–	–	CP
TWSEAS Programmer	–	–	CP
TWSEAS Programmer	–	–	CP
Section Head CBE/IMS Sys Analyst	9648	Maj	–
Education Specialist	–	–	GS-9

Document	Date
System Operational Specification (IMC)	01 May 80
Functional Operational Specification (IMC)	01 May 80
Software Development Plan (IMC)	30 May 80
Program Performance Specification (PPS) TWSEAS IMC	18 Feb 83
Statement of Work/Tasking Letter	22 Feb 83
CMC ltr RDD-28-84-dah, Subj: ROC TNG 1.04A for Product Improvement of TWSEAS	01 Oct 84
TWSEAS Computer Operator's Manual, Map Maneuver Controller (MMC) (Currently Under Revision)	1 Sep 86

TWSEAS System Operator's Manual, Map Maneuver Controller (MMC) (Currently Under Revision)	1 Sep 82 w/changes 1, 2, & 3
RDT&E Work Directive C1443-A, TWSEAS	Updated Annually

307 BATTERY COMPUTER SYSTEM (BCS), AN/GYK-29

307.1 Requirement. The Marine Corps requires an artillery computer system (ACS) to replace the M18 Gun Direction Computer, also known as the Field Artillery Digital Automatic Computer (FADAC). The system will exploit the capabilities of other existing and developmental artillery and communication systems in order to enhance mission effectiveness and battlefield survivability of the artillery. ACS will be used to perform technical fire direction at artillery firing batteries. When MIFASS is fielded, ACS will comprise its battery level extension. ACS, employed in conjunction with the AN/TMQ-31 Field Artillery Meteorological Data System (FAMDS), the M-90 Velocimeter, cannon-launched guided projectiles, and digital communication capabilities, will contribute to achieving around-the-clock, all-weather, timely, accurate artillery support.

307.2 Concept of Employment. The Marine Corps is procuring the Army AN/GYK-29 BCS to meet the ACS requirement. BCS will be used to perform technical fire direction at artillery firing batteries. BCS will interoperate with MIFASS when that system is fielded. Employment of BCS does not require changes in battery operations as currently described in FM 6-50, The Field Artillery Cannon Battery. The ability of BCS to compute firing data for each howitzer, based on the weapons position, permits a wider dispersion of weapons in a battery area, increasing survivability. Direct support artillery battalions are organized with three firing batteries, each with two four-howitzer firing platoons. Each platoon will be equipped with a BCS. When MIFASS is fielded, the MIFASS-equipped battalion FDC will normally perform tactical fire direction with technical fire direction being performed with BCS at the battery/platoon level.

307.3 System Description. BCS is a computer-based command, control, and communication system that provides for technical and tactical information recording, processing, computation, manual entry, display, control, and digital transmission of technical firing data from the battery FDC to the individual weapons. BCS also provides for the receipt and processing of digital requests for fire from forward observers and liaison officers equipped with DCTs and for the digital transmission of appropriate fire-mission related messages to forward observers and liaison officers. Communications also may be over voice radio or telephone with essential data entered manually into the BCS.

307.3.1 Functions. The BCS will perform six major functions. They are:

- Compute technical fire direction data.
- Store data.
- Display fire mission data.
- Provide communication interfaces.
- Compose and edit messages.
- Monitor system operation with a built-in-test capability.

307.3.2 Modes of Operation. BCS will have two basic modes of operation:

- Autonomous mode of operation prior to the fielding of MIFASS or subsequent to the fielding of MIFASS when a firing battery is detached from its parent direct support artillery battalion; e.g., task organized as an element of a MAU.

- Employment in conjunction with MIFASS; e.g., the parent artillery battalion maintains centralized tactical or both centralized tactical and centralized technical fire direction over its batteries.

307.3.3 Interoperability. BCS will interoperate with the following systems through a digital interface:

- Digital Communications Terminal, AN/PSC-2.
- Army Tactical Fire Direction System.
- Radar Set, Firefinder AN/TPQ-36.
- Field Artillery Meteorological Data System, AN/TMQ-31.

307.3.4 Major Items of Equipment. BCS consists of the following major items of equipment:

- Computer Group, Gun Direction OL-200/GYK-29.

- Mounting Kit, Computer Gun Direction (for M561 vehicle), MK-1831/GYK-29.

- Data Display Group, Gun Direction, OD-144(V)__/GYK-29. This item is furnished with mounting accessories for the type howitzer with which it is to be used. Each gun display group consists of a data display, gun direction (section chief's display), and two data displays deflection/elevation.

Ancillary equipment includes the necessary radios, cryptographic equipment, printer, power source, test equipment, and tools.

307.4 Acquisition Strategy and Schedule. BCS has been developed and fielded by the Army. The Marine Corps entered into a contract with the Norden Systems Division of United Technologies in 1986 for the procurement of the BCS. An IOC is projected for the 3rd Quarter of FY 1988.

307.5 Personnel and Training

307.5.1 Personnel. The introduction of BCS will not require additions to the present artillery or maintenance unit tables of organization. The system will be operated by Marines with field artillery fire control or field artillery operations military occupational specialties (MOSs) 0844 and 0848. Maintenance at the organization level will be by system operators. Maintenance at the intermediate level will be by personnel with the 2885 MOS.

307.5.2 Training. The U.S. Army Field Artillery School will provide instruction for operator personnel and artillery officers as part of regular courses of instruction at that school. Initial deployment training for units receiving the BCS will be conducted by a new equipment training team (NETT). Proficiency training can be conducted by officer/NCO personnel, who have received institutional training, using the self-paced training package supplied by the NETT. Maintenance training will be accomplished by the Field Artillery Computer Repair Course (MOS 2885).

307.6 Documentation

Document	Date
Decision Memorandum for the Deputy Chief of Staff for Plans, Policies, and Operations, Subj: Proposed Artillery Computer System Concept of Employment (ACS COE)	13 Feb 84
CMC ltr LMA/ILS/RDM/wew, LAP 27-84, Subj: Transmittal of Parts I and II Letter of Adoption and Procurement 27-84 for the Battery Computer System (BCS), AN/GYK-29	25 Jul 84
CMC ltr ROC3-29-caj, Subj: Required Operational Capability (ROC) No. SPA-1.06A for an Artillery Computer System	10 Aug 84

A detailed listing of BCS operator organizational publications, intermediate and depot maintenance publications, installation instructions, and modification work orders is contained in LAP 27-84.

308 MODULAR UNIVERSAL LASER EQUIPMENT (MULE), AN/PAQ-3

308.1 Requirement. The Marine Corps requires a man-portable, modular, laser equipment for determination of target locations and target designation for laser tracker-equipped aircraft and terminal homing munitions.

308.2 Concept of Employment. The MULE is a team-portable laser, target-designating, and ranging system that will be used by artillery forward observers, naval surface fire support spotters, reconnaissance personnel, and forward air controllers. It provides these action elements with the capability for directing attacks using unguided munitions, and designating targets for laser-guided munitions. It can also be used for self-location. Developmental Bulletin 9-86, Laser Designators, Rangefinders, Seekers, and Guided Munitions, and MCDEC Operational Handbook 6-20, Joint Laser Designation Procedures, provide a more detailed description of the concept of employment for the MULE.

308.3 System Description

308.3.1 Major Items of Equipment and Functions. The MULE consists of four modules. (See Figure 3-15.)

a. Laser Designator Rangefinder Module (LDRM). The LDRM measures the range to a target. It can designate targets for the entire inventory of laser-guided munitions. It can be used either in a hand-held mode or mounted on a stabilized tracking tripod module.

b. Stabilized Tracking Tripod Module (STTM). The STTM is a stabilized platform for the LDRM, the north finding module (NFM), and the AN/TAS-4D night sight. Although not an element of the MULE, the AN/PSC-2 DCT may also be attached to the STTM. The STTM provides stabilization for the tracking of moving targets and for designation of targets at extended ranges.

c. North Finding Module (NFM). The NFM is a gyrocompass and micro-processor assembly that provides azimuth data to within 2 mils accuracy.

d. Night Sight, AN/TAS-4D (NS). The NS provides enhanced target observation capabilities during periods of darkness.

308.3.2 Interoperability. The MULE is designated to interoperate directly with the DCT, and with MIFASS and BCS through the DCT. The DCT connects to the MULE via a cable provided with the MULE. When the DCT fire support message applications program is developed, the MULE will be able to transmit target range, azimuth, and vertical angle directly to another DCT, MIFASS, or BCS. When laser-guided ordnance is being employed, the DCT, located at the MULE, will also receive the "command designate" message from MIFASS, BCS, or another DCT, alerting the operator to designate the target.

308.4 Acquisition Strategy and Schedule. The MULE is being manufactured by Hughes Aircraft Company. An IOC was achieved in 1986.

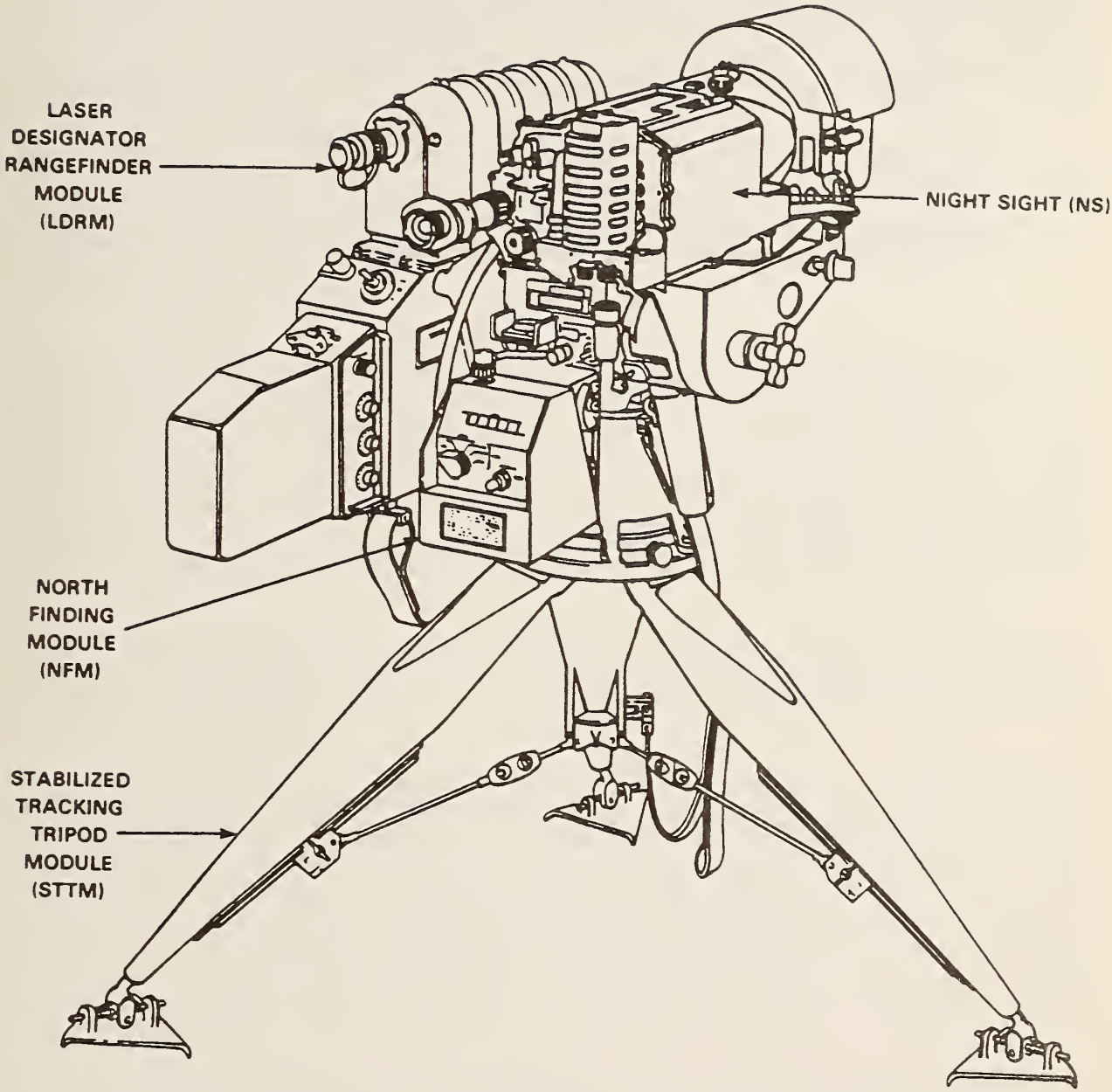

Figure 3-15. MULE w/LDRM, NFM, NS, and STTM

308.5 Documentation

Document	Date
ROC SPA 1.03A, Modular Universal Laser Equipment (MULE)	19 Mar 79
Developmental Bulletin (DB) 2-80, Modular Universal Laser Equipment (MULE) and its Employment	16 Jun 80
Operational Handbook (OH) 6-2D, Joint Laser Designation Procedures	11 Dec 85
Developmental Bulletin 9-86, Laser Designators, Rangefinders, Seekers, and Guided Munitions	Feb 86 (Draft)

309 RADAR SET, FIREFINDER AN/TPQ-36

309.1 Requirement. The Marine Corps requires a highly mobile radar that can locate mortars, artillery, and other high-angle-of-fire weapons, with multiple weapons firing simultaneous from different positions. The accuracy and speed of locating the firing positions must be sufficient to permit timely, effective counterfire. The system must be ground mobile by tactical vehicles and transportable by medium-lift helicopters.

309.2 Concept of Employment. The target acquisition battery of each artillery regiment has five AN/TPQ-36 radars. The location and sector of search of each radar is established by the senior artillery headquarters of the ground combat element.

309.3 System Description

309.3.1 Functions. The AN/TPQ-36 is a phased-array radar system that uses a combination of radar techniques and computer-controlled signal processing to detect, verify, and track projectiles in flight. The tracking data is used to determine the projectiles' trajectory, which can be extrapolated to give either the weapon location or projected point of impact of the fire. The radar operator can automatically transmit this data via radio to the artillery FDC. The system can locate weapons firing simultaneously from multiple positions. It can also be used to register and adjust friendly fire. However, it cannot adjust friendly fire while in the hostile weapons locating mode of operation.

309.3.2 Interoperability. The AN/TPQ-36 will have a semi-automated interface with MIFASS and BCS through which it will provide hostile weapons location and adjustment/registration data. The interface from MIFASS and BCS to the AN/TPQ-36 will be manual.

309.3.3 Major Items of Equipment. The AN/TPQ-36 radar system consists of an operations group and an antenna-transceiver group. The operations control group is housed in a standard S-250 shelter that provides space for radar operators and the data processing, display, and communication equipment. The operations control group weighs 2500 lbs and is normally carried in an M923 series truck. The antenna-transceiver group is permanently mounted on trailer that carries the planar-array antenna, transmitter, receiver, and associated electronics. The antenna-transceiver group and its M103A1 trailer weigh 3200 lbs and is normally towed by an M923 series truck. Power is provided by an MEP-112A generator.

309.4 Acquisition Strategy and Schedule. The AN/TPQ-36 radar has been developed by the Army Electronics Research and Development Command (ERADCOM). It is produced by the Hughes Aircraft Company. The Marine Corps participated in the development and testing of the system. An IOC was achieved in January 1985. The Marine Corps has purchased 22 systems.

Concurrent with production, the Army is conducting a product improvement program (PIP). The Marine Corps is monitoring the PIP to ensure that Marine Corps requirements are met.

309.5 Personnel and Training. The Marine Corps is using the U.S. Army Field Artillery School at Fort Sill, Oklahoma for operator and maintenance personnel training.

309.6 Documentation

Document	Date
Joint TRADOC-MCDEC review board for HWLS/AN/TPQ-36 Comparative Analysis Recommendation	27 Jul 76
Memorandum of Agreement between the U.S. Army and U.S. Marine Corps.	Sep 76
Minutes of ASARC III Production Decision Making	13 Dec 76
U.S. Marines Corps ROC CCC 1.35, Radar, Mortar Locating, Ground Mobile and Helicopter Transportable	31 Jul 79

310 METEOROLOGICAL DATA SYSTEM (MDS), AN/TMQ-31

310.1 Requirement. The Marine Corps requires a mobile, lightweight, automated meteorological data acquisition and processing system with nonradiating, ground-based components. The system must automatically convert unprocessed radiosonde meteorological data into messages and transmit the messages to users.

310.2 Concept of Employment. The AN/TMQ-31 will be organic to the headquarters batteries of Marine Corps artillery regiments. The MDS will be used for collecting meteorological data for determining corrections for artillery technical fire direction data; weather forecasting; and nuclear, biological, and chemical (NBC) warfare operations. Three AN/TMQ-31s will be provided to each artillery regiment.

310.3 System Description

310.3.1 Functions. The AN/TMQ-31 measures timely, accurate meteorological data from the earth's surface to 30,000 meters altitude. The nonradiating, computer-controlled ground station acquires meteorological data from a balloon-borne radiosonde, prepares STANAG-formatted messages, and distributes near-real-time meteorological information to users via integral communication devices. The balloon-borne radiosonde is tracked by the trailer-mounted antenna group. It may also be tracked by an automated theodolite group.

Multiple wind direction finding techniques increase the MDS's operational availability under all weather and terrain conditions. A 403 MHz radiosonde equipped with a navigation aid (NAVAID) receiver furnishes wind direction and velocity in any area where LORAN C, D, VLF, or OMEGA signals are available. A 1680 MHz radiosonde may also be configured to simultaneously provide both NAVAID and RDF measured wind velocity and direction. This mixed mode of operation provides accurate wind data at all altitudes. Visual balloon tracking via a synchro-equipped theodolite is another option. Theodolite data is automatically read into the computer and may be used independently or in conjunction with radiosonde-based height data.

310.3.2 Interoperability. The AN/TMQ-31 will provide STANAG-formatted meteorological messages to BCS and MIFASS.

310.3.3 Major Items of Equipment. Major items of equipment are:

a. The Equipment Group Shelter, OA-9092/TMQ-31(V) is housed in a modified S-280 shelter. It houses telemetry receivers, NAVAID position determining electronics, system processor and peripherals, communication equipment, and power supplies. The shelter is normally carried in a 5-ton truck.

b. The Radio Direction Finding Antenna Group, OE-337/TMQ-31 is mounted on a modified M-105 trailer. It is designed for quick setup and march order. Two hundred feet of reel-mounted cable are stored beneath the trailer deck. An intercommunications terminal provides communication with the equipment group shelter. The antenna group includes the SU-134/TMQ-31 Theodolite.

c. Ancillary equipment includes:

(1) Two 10 kW, 60 Hz Electrical Generators, MEP 003A.

(2) Meteorological Station AN/TMQ-4A, which includes:

- Balloons.
- Hydrogen generator.
- Balloon inflation and launching device.
- Radiosondes, AN/AMT-23.

310.4 Acquisition Strategy and Schedule. The MDS has been developed for the U.S. Army ERADCOM at Fort Monmouth, New Jersey by the Bendix Corporation. The Marine Corps is procuring eighteen sets and associated equipment. The MDS will be placed in service by the Marine Corps in 1987.

310.5 Personnel and Training. The AN/TMQ-31 MDS replaces the AN/GMD-1 RAWIN. No additional operator or maintenance personnel well be required. Operator and maintenance personnel will be trained at the U.S. Army Field Artillery School, Fort Sill, Oklahoma and by on-the-job training at FMF-using organizations.

310.6 Documentation

Document	Date
ROC SPA 1.08R, Field Artillery Meteorological Acquisition System (FAMAS)	28 Mar 80
CMC ltr LMA/ILS/RDMlwew, LAP 19-79 Rev. 2, Transmittal of Parts I and II, Letter of Adoption and Procurement 19-79 Rev. 2, for the Meteorological Data System (MDS) AN/TMQ-31	9 Nov 83

311 BACKUP COMPUTER SYSTEM (BUCS) SPECIAL

311.1 Requirement. The Marine Corps has a requirement for a backup system for the Battery Computer System (BCS), AN/GYK-29. The BUCS is also the interim replacement for FADAC and the replacement for the TI-59 hand-held calculator used for computing artillery technical fire direction and survey data. BUCS has been issued to artillery regiment and battalion headquarters batteries and to all howitzer batteries.

311.2 System Description. The BUCS Special consists of a Hewlett Packard 71b hand held computer, a Hewlett Packard 2225B Inkjet printer, a computer-printer interface subassembly, two special purpose cables, power transformers, read only memory (ROM) modules, and an attache case-size carrying case. The U.S. Army has procured a number of BUCS Generals that do not have the printer and interface subassembly. All Marine Corps units have the BUCS Specials.

311.3 System Capabilities. BUCS possesses the capability to support field artillery survey and cannon gunnery computations for 105mm, 155mm and 8" howitzers. All interfaces are manual.

312 SMALL UNIT NAVIGATION SYSTEM (SUNS). SUNS will be a hand-held NAVSTAR Global Positioning System (GPS) receiver-processor unit that will provide a user with accurate position location and navigation capabilities anywhere on or near the surface of the earth in all weather conditions. It will be passive and self-contained. It will not radiate any signals and employment will not be dependent on installation of ground-based transmitters, antennas, or support equipment. SUNS will be used by reconnaissance teams and other elements requiring a capability to accurately navigate and locate positions during advance force operations, deep reconnaissance missions, and other independent operations where insertion and extraction modes, clandestine operational requirements, and environmental conditions preclude the use of other navigational systems. SUNS may fulfill the Marine Corps requirement for a manpack NAVSTAR GPS terminal as described in ROC CCC 1.34, Global Positioning System (GPS).

The Marine Corps requirement for the SUNS is documented in ROC INT 1.38, Small Unit Navigation System (SUNS), dated 29 January 1985. RDT&E Work Directive C0085-A, revised annually, provides information concerning the current and future status of the SUNS.

CHAPTER IV
OTHER SERVICE, JOINT SERVICE, AND NATO TACTICAL DATA SYSTEMS

400 INTRODUCTION

This chapter describes other Service, joint Service, and NATO TDSs with which the Marine Corps has a stated interoperability requirement or for which a requirement may develop in future joint or combined operations. Where it has been defined, the level of the interface between systems is described. Where not defined, it may range from manual to fully automated. An undefined requirement is not, therefore, means dependent, is not necessarily via direct link, and does not implicitly require the exchange be via a digital data link. Neither should the interface be construed as necessarily representing a telecommunications link.

401 NAVY SYSTEMS

Planning and executing an amphibious operation requires the close cooperation and coordination between Navy and Marine Corps units involved. To achieve this, a high degree of interoperability between Navy and Marine Corps TDSs must exist.

The Navy C^2 systems discussed in this chapter are installed or planned for installation in the following flag-configured amphibious assault shipping:

- Amphibious Command Ship, LCC 19 Class.
- Amphibious Assault Ship (General Purpose), LHA 1 Class.
- Amphibious Assault Ship (Multi-purpose) LHD 1 Class.
- Amphibious Assault Ship (Helicopter), LPH, All Classes.

The Amphibious Transport Dock (Flag Configured) (LPD-F) is not included. It is not currently equipped nor are there plans to equip it with the C^2 systems described in this section.

The Command, Control, Communications, and Intelligence (C^3I) subsystems of the ships' combat systems differ between classes. LHD 1 Class ships are currently under construction and are being equipped with state-of-the-art systems. Provisions are being made for future installation in the LHDs of systems under development. However, they will not be part of the ships' initial equipment. Under the Navy's Warfighting Improvement Program (WIP), plans provide for C^2 systems of LCC 19, LHA 1, and LPH Class ships to be upgraded generally to equal or to exceed the capabilities of LHD Class ships.

Table 4-1 lists the C^2 systems of principal interest to the Marine Corps that are currently installed or planned for future installation in LCC, LHA, and LHD Class ships. It is not a complete listing of C^2 systems in those ships. Details were not available concerning the LPH WIP at the time of publication of this plan.

Table 4-1. Flag Configured Amphibious Assault Shipping C^2 Systems

AMPHIBIOUS COMMAND SHIP, LCC 19 CLASS

CURRENT SYSTEMS

- AMPHIBIOUS FLAGSHIP DATA SYSTEM (AFDS)
  - —NAVAL TACTICAL DATA SYSTEM (NTDS)
  - —AMPHIBIOUS SUPPORT INFORMATION SYSTEM (ASIS)
- AMPHIBIOUS COMMAND SHIP INTELLIGENCE CENTER
- CLOSED CIRCUIT TELEVISION (CCTV) SYSTEM

FUTURE SYSTEMS

- IMPROVED INTEGRATED TACTICAL AMPHIBIOUS WARFARE DATA SYSTEM (ITAWDS)
  - —COMBAT DIRECTION SYSTEM (CDS)
  - —TACTICAL INFORMATION PROCESSING SYSTEM (TIPS)
  - —RADAR DISPLAY GROUP (RDG)
- NAVAL INTELLIGENCE PROCESSING SYSTEM (NIPS)
- CLOSED CIRCUIT TELEVISION (CCTV) SYSTEM
- FLAG DATA DISPLAY SYSTEM (FDDS)
- POSITION LOCATION REPORTING SYSTEM (PLRS)
- MARINE INTEGRATED FIRE AND AIR SUPPORT SYSTEM (MIFASS)
- TACTICAL COMBAT OPERATIONS (TCO) SYSTEM
- SHIPBOARD MTACCS INTERFACE CONTROLLER (SMIC)
- NAVSTAR GLOBAL POSITIONING SYSTEM (GPS)
- SENSOR MONITORING CENTRAL

AMPHIBIOUS ASSAULT SHIP (GENERAL PURPOSE) LHA 1 CLASS

CURRENT SYSTEMS

- ITAWDS
  - —TACTICAL DATA SYSTEM (TDS)
  - —MANAGEMENT INFORMATION SYSTEM (MIS)
- NIPS
- CCTV

FUTURE SYSTEMS

- IMPROVED ITAWDS
  - —TDS
  - —TIPS
  - —RDG
- NIPS
- CCTV
- FDDS
- PLRS
- SMIC
- NAVSTAR GPS
- MIFASS
- TCO

AMPHIBIOUS ASSAULT SHIP (MULTI-PURPOSE) LHD 1 CLASS

FUTURE SYSTEMS

- IMPROVED ITAWDS
  - —TDS
  - —TIPS
  - —RDG
- NIPS
- CCTV
- FDDS
- PLRS
- SMIC
- NAVSTAR GPS
- MIFASS
- TCO

The Naval Tactical Data System (NTDS) was originally developed to assist in the conduct of antiair warfare operations by the fleet by automating the combat information center (CIC) of selected ships. As the system evolved it was installed aboard an increasingly greater number and variety of ships. Additional programs were developed for surface and antisubmarine warfare. NTDS was installed in LCC 19 class ships as an element of the Amphibious Flagship Data System (AFDS). Table 4-1 shows the evolution of NTDS as the TDS and Combat Direction System (CDS) element of the Integrated Tactical Amphibious Warfare Data System (ITAWDS) in flag-configured amphibious ships in the future. Similarly, the Amphibious Support Information System (ASIS) of the AFDS has evolved as the Management Information System (MIS) of ITAWDS in the LHA and the Tactical Information Processing System (TIPS) of the improved ITAWDS in flag-configured amphibious ships in the future. Table 4-1 also shows this evolution. Like systems may perform the same functions but may comprise different components on different classes of ships . The difference in functions or interfaces of concern to the Marine Corps are described in the following paragraphs.

401.1 Amphibious Flagship Data System (AFDS). LCC 19 Class ships are currently equipped with the AFDS to provide automated assistance to the commander amphibious task force (CATF) and commander landing force (CLF). AFDS comprises two systems; the Naval Tactical Data System and the Amphibious Support Information System. AFDS terminals for both NTDS and ASIS are located in:

- Flag command.
- Landing force command.
- Flag plot/flag bridge.
- Supporting arms coordination center (SACC).
- Military operations/ship-to-shore/logistics area.
- Various areas within the combat information center (CIC).
- Intelligence center (IC).
- Ship's signals exploitation space (SSES).

Through the Navy's WIP, AFDS will be upgraded to the improved ITAWDS with component CDS and TIPS by the early 1990's.

401.1.1 Naval Tactical Data System (NTDS). NTDS consists of sensors, computers, display devices, nonreal-time displays, and operators linked together to share displays of tactical and strategic information. The system provides on-line collection, processing, presentation, storage, and dissemination of operational and intelligence data received from:

- Sensors; e.g., radars, sonars, and optical devices.
- Navigation and electronic countermeasures (ECM) equipment.

- Identification friend or foe (IFF)/selective identification feature (SIF) equipment.

- Aircraft and other ships via data links.

a. Functions

- Detecting and tracking aircraft, missiles, and ships.
- Providing situation displays and decision aids.
- Providing weapons control.
- Controlling ECM and electronic counter-counter measures (ECCM).
- Controlling surface and underwater operations. Surface operations include the control of landing craft and landing vehicles.
- Displaying sonar data.
- Displaying intelligence data.
- Providing underwater fire control.

b. Interfaces

- Tactical Digital Information Link (TADIL) A/Link 11 data exchange among and between surface platforms and installations. This includes interfaces with the landing force tactical air direction center (TADC)/tactical air command center (TACC) and tactical air operations center (TAOC). It also includes interfaces with the Air Force Control and Reporting Center (CRC) and the Airborne Warning and Control System (AWACS), E3A and the Navy Airborne Tactical Data System (ATDS).

- TADIL C/Link 4A for ship/shore-to-aircraft, aircraft-to-aircraft, and aircraft-to-ship/shore computer interfaces. It may be set up for one- or two-way operation.

- Link 14 for NTDS computer output via radio to ships and other centers that are not NTDS equipped.

- Intra-task force voice and teletype circuits.

c. Equipment. NTDS and ASIS in the LCC use the same four colocated computers. Of these, NTDS uses three computers, or two in a degraded mode. In event of a computer casualty affecting the ASIS or one of the NTDS computers, a determination is made whether to retain ASIS and operate NTDS in a degraded mode or to cease ASIS operations and retain the full NTDS capability. This decision is made by CATF based on the tactical situation.

401.1.2 Amphibious Support Information System (ASIS). ASIS is a general information, computerized storage and retrieval system designed to support CATF and CLF during all phases of amphibious operations. All data input to

the system is generated by the user. Electrical accounting machine (EAM) cards are the most frequently used input medium for ASIS. Magnetic and paper tape may also be used. Prestored formats are provided for use with standardized files. ASIS shares computers with NTDS. In event of a computer failure, ASIS may be shut down in order to maintain a full NTDS capability.

a. Functions

- Constructing and printing parts of standard amphibious planning documents, combat reports, and other output in formats established by the user through the use of stored programs.

- Providing reports "on-call" or in accordance with an established schedule, by means of a cathode ray tube (CRT), punched paper tape, or printout from a high speed printer.

- Processing data called from supplemental storage. Concurrent use of ASIS by several terminals may exceed system capabilities. Accordingly only a limited number of files can be loaded in the system at one time.

ASIS standardized files include:

- Personnel.
- Amphibious intelligence.
- Astronomical/tidal data.
- Landing serial.
- Target list.
- Ammunition status (naval gunfire).
- Air schedule.
- Air assets.
- Air ordnance.
- Staff journal.
- Communications.
- Supply.
- Parts status.
- Material status.
- Rations planning.
- Fuel planning.
- Ammunition planning.
- Whole blood control program.
- Support.

b. Interfaces. No direct data links.

c. Equipment. ASIS terminal locations are described in paragraph 401.1.

401.2 Integrated Tactical Amphibious Warfare Data System (ITAWDS). ITAWDS is currently operational in LHA Class ships. An improved ITAWDS will be installed in LHD Class ships and will replace AFDS in LCCs as part of the Navy WIP. ITAWDS will also be upgraded in LHAs and installed in LPHs in accordance with the Navy WIP.

401.2.1 ITAWDS in LHA 1 Class Ships. ITAWDS, as currently operational in LHAs, comprises two elements; the TDS and MIS.

a. Functions

(1) The functions of ITAWDS-TDS as currently installed in LHAs and the functions of AFDS-NTDS in LCCs are essentially the same.

(2) MIS is an ASIS-like generalized information storage, retrieval, and processing system that provides the capability to define, generate, and update the data base supporting CATF, CLF, and ship command personnel. MIS also provides the user with the capability to define and produce reports, compose queries, and prepare and extract data from the data base. Standardized MIS files include:

- Personnel.
- Landing serial.
- Target list.
- Ammunition status (Naval gunfire).
- Air schedule.
- Air history.
- Air assets.
- Staff journal.
- Logistics planning.
- Supply.
- Support.

Additional files may be created to meet the needs of the user. MIS also has a U-1500 computer simulation capability that enables it to support the Navy Maintenance and Material Management (3M) system and the Shipboard Uniform Automated Data Processing System (SUADPS). The 3M and SUADPS are described in Chapter IV, Marine Corps Combat Service Support Automated Information Systems.

b. Interfaces.

ITAWDS-TDS interfaces are the same as those described for AFDS-NTDS in paragraph 401.1.1. The only interface between TDS and MIS is for the

transfer of limited target data from the MK 86 gunfire control system of TDS to MIS.

The "P" and "Q" languages used by ITAWDS-MIS are not compatible with the QUEST language used by ASIS. However, the capability does exist for the manual exchange of information contained in the data bases of ASIS and MIS by using magnetic tape, EAM cards, or printouts as the exchange media.

c. Equipment. ITAWDS on LHAs is supported by four computers. Three support TDS and one supports MIS. As in the case of AFDS in LCCs, operation of TDS at full capability requires three computers to be dedicated for that purpose. In the event of a computer failure, TDS may be operated in a degraded mode using two computers, or the computer supporting MIS may be assigned to support TDS with the resulting loss of the MIS capability.

MIS terminals are located in the following LHA spaces:

- Flag plot.
- CIC.
- Landing force operations center (LFOC).
- Tactical air control center (TACC).
- SACC.
- Joint intelligence center (JIC).
- Tactical logistical (TACLOG) center.
- Debarkation control center.

401.2.2 Improved ITAWDS. LHD 1 and LCC 19 Class ships will incorporate improved ITAWDS as one of the elements of their command and control systems in accordance with the modernization plans of the WIP. The improved ITAWDS comprises three main functional elements:

- TDS in LHD 1 and CDS in LCC 19 Class ships.
- Tactical Information Processing System.
- Radar Display Group (RDG).

Improved ITAWDS on LCCs will be supported by three AN/UYK-43(V) computers, two dedicated to CDS functions and one dedicated to TIPS functions. On LHDs, ITAWDS will be supported by two AN/UYK-43(V) computers, one for TDS functions and one for TIPS functions.

401.2.2.1 Tactical Data System/Combat Direction System. The TDS/CDS portion of ITAWDS uses computer programs, a general purpose digital data computer complex, data display consoles, and associated peripheral equipment to provide a means for rapidly collecting, displaying, evaluating, and disseminating information regarding the tactical situation. Using data provided by other LHD/LCC systems, link-acquired data, and operator-entered data, TDS/CDS

correlates and maintains the real-time tactical picture for support of command and control decisionmaking. TDS/CDS also provides the means for controlling the combat system configuration, monitoring the combat system operational status, and controlling the weapon system engagement process.

a. Functions

- Managing a total-track data base.
- Performing a mission management function.
- Performing threat evaluation and weapon assignment functions.
- Maintaining a record of combat system operational readiness.
- Performing systems management and systems interface functions.
- Driving displays, consoles, and automated status boards.
- Processing incoming and outgoing link data.
- Performing on-line fault detection, isolation, and data extraction.

b. Interfaces. TDS/CDS interfaces with other systems include:

- Tactical Information Processing System.
- Flag Data Display System.
- Naval Intelligence Processing System.
- Cryptologic Combat Support Console.
- Ship's sensor, navigation, and command support systems.
- MIFASS/TCO and PLRS via the Shipboard MTACCS Interface Controller.
- TADIL A/Link 11.
- TADIL B.
- TADIL C/Link 4A.
- TTY/Link 14.

c. Equipment. TDS/CDS terminals are located in the following amphibious control center spaces:

LHD 1 Class	LCC 19 Class (Future Installation)
Flag plot	Flag plot
Combat information center (CIC)	Supplementary plot (SUPPLOT)
Tactical air control center (TACC)	Tactical flag command center (TFCC)
Supporting arms coordination center (SACC)	CIC (Includes air operations center (AOC) and tactical air control center (TACC))
Helicopter direction center (HDC)	

LHD 1 Class	LCC 19 Class (Future Installation)
Ship's signal exploitation space (SSES)	Supporting arms coordination center (SACC)
Tactical-logistical/helicopter logistic support center (TACLOG/HLSC)	Ship's signal exploitation space (SSES)
Pilot house	Ship-to-shore logistics coordination center (S/SLCC)
Flag electronic data processing (EDP) room	Automated data processing (ADP) room

401.2.2.2 Tactical Information Processing System (TIPS). The TIPS portion of the improved ITAWDS is a computer-based, general-purpose data storage, processing, and retrieval system used to support tactical and administrative functions. TIPS terminals consist of digital display indicators and printers. The display indicator contains the operator keyboard and CRT display monitor. A high speed printer, located in the ADP center, is used to print reports produced as a result of update to or retrieval from the data base. TIPS uses the same "P" and "Q" languages used by ITAWDS MIS.

a. Functions. TIPS is used to create and manipulate the large data bases required for the coordination of:

- Operational, targeting, and logistic data during amphibious operations.
- Aircraft scheduling and accounting data.
- Intelligence data. Although intelligence files will be maintained by the NIPS AN/SYQ-9(V)-based data processing system, certain data elements contained in the intelligence files also will be duplicated in similar TIPS files after they have been sanitized by the IC/JIC.

TIPS also facilitates the development and promulgation of landing plan documents and supporting arms reports, the management of embarkation data, and the accountability for landing force operational reserve material (LFORM) assets. Enhanced menu functions are provided to support terminal operators in the maintenance of standardized files and the preparation of reports associated with those files.

b. Interfaces

- TDS/CDS:
  - Provides for the exchange of data between TIPS and TDS/CDS.
  - Updates the TIPS track data files with data received from TDS.
  - Formats displays for presentation on the TDS controlled automated status boards (ASTABs).
  - Transfers data from designated TIPS files to TDS modules at the request of TDS.

- Automated Data Processing for the Fleet Marine Force (ADPE-FMF) by use of the MILTOPE DC 401 Diskette.

- MIFASS/TCO via an interface to-be determined.

c. Equipment. TIPS terminals will be located in the following amphibious control center spaces:

LHD 1 Class	LCC 19 Class (Future Installation)
Flag plot	TFCC
CIC	CIC (Includes AOC and TACC)
LFOC	LFOC
TACC	SACC
SACC	S/SLCC
JIC	IC
TACLOG center	ADP room
Debarkation control center	
EDP room	

401.2.3 Radar Display Group (RDG). The RDG is the third element of ITAWDS. It provides radar plan position indicator (PPI) displays independent of the TDS/CDS data display group. The RDG serves as an information source for navigation, ship maneuvering, and CIC operations. The RDG is controlled from terminals located in the TFCC/flag plot, CIC, flag bridge, pilot house, radar room, and meteorological room.

401.3 Airborne Tactical Data System (ATDS). ATDS is a carrier-based, airborne radar platform. It is a computerized data gathering and processing system featuring autonomous automatic target tracking and interceptor control, and a capability for high-speed automatic data exchange, via TADIL A and TADIL C, with NTDS-, TDS-, and CDS-equipped units. ATDS is also an electronic warfare support measures (ESM) system for passive detection and identification.

a. Functions. Primary ATDS missions are airborne early warning (AEW) and strike control. Alternate missions include control of photo-reconnaissance, surface surveillance, search and rescue, and radio relay operations.

b. Interfaces

- TADIL A/Link 11 with NTDS-, TDS-, and CDS-equipped ships; Marine Corps TAOC and TADC/TACC; and other Service TADIL A-capable air control facilities.

- TADIL C/Link 4A with appropriately equipped tactical aircraft.

- TADIL J capability, when a Joint Tactical Information Distribution System (JTIDS) terminal is included in the system, for exchange of data with JTIDS-equipped aircraft, ships, and ground stations. The Marine Corps TAOM and ATACC will be JTIDS equipped. Current plans do not include JTIDS terminals for LCCs, LHAs, LHDs, or LPHs.

c. Equipment. ATDS is installed in E-2C aircraft.

401.4 Naval Intelligence Processing System (NIPS). NIPS is a shipboard, computer-based intelligence processing system designed to support the intelligence needs for strike and amphibious warfare operations. NIPS terminals are located in the intelligence centers of LCCs, LHAs, and LHDs. NIPS-equipped ships carry a hemispheric or fleet data base for their area of operations. Hemispheric data bases are produced by the Fleet Intelligence Centers (FICs). A world-wide data base is administered by the Naval Intelligence Support Command.

a. Functions

- Maintaining the intelligence files.
  - Processing, evaluating, analyzing, and updating tactical intelligence.
  - Correlating tactically collected information with the multisource intelligence data base.
- Disseminating Intelligence to users
  - Processing and displaying imagery.
  - Providing printed and magnetic tape output.
  - Providing the display of intelligence information within the IC/JIC on NIPS terminals and in other C^2 spaces via the CCTV system.
- Assisting with amphibious warfare and strike warfare planning.

b. Interfaces

- MAGIS IAC by means of magnetic tape, printed copy, and record message traffic.
- NTDS/TDS/CDS for receipt of track data and other intelligence information. The level of interface is dependent on the class ship and the specific systems involved.
- FDDS, when the ship has been so equipped, for receipt of warfare data and to provide intelligence data to that system.

- Navy Modular Automated Communication System (NAVMACS) AN/SYQ-7(V)3, when the ships have been so equipped, for the receipt and distribution of Fleet Broadcast Data.

- Afloat Correlation System (ACS), when that system is installed, for the receipt by NIPS of correlated track data and for NIPS to provide intelligence support data to that system. ACS is a computer-based data correlation system that receives track data from battle group/force and nonforce sources and develops a wide-area composite of all tactical tracks.

- The IC/JIC can provide intelligence briefings/information to appropriately equipped spaces via the CCTV system. Spaces viewing the information are controlled by the IC/JIC.

c. Equipment

(1) NIPS functions in LCC 19 Class ships are currently supported by the Amphibious Command Ship Intelligence Center, AN/SSQ-64(V). The Naval Intelligence Processing System AN/SYQ-9(V)3 is programmed for installation in the LCCs in FY92-FY93 as an element of the LCC WIP. The AN/SYQ-9(V)3 will improve the data processing and dissemination capabilities of the IC and reduce the size and weight of the processing equipment. NIPS will interface with the Combat Direction System (CDS), the Flag Data Display System (FDDS), and the Afloat Correlation System (ACS). It will support the processing and display of imagery received from external sources such as the Fleet Imagery Support Terminal (FIST).

(2) Joint intelligence centers on LHAs are in the process of being equipped with the Naval Intelligence Processing System AN/SYQ-9(V)1. LHAs 1 through 3 have their systems installed. LHAs 4 and 5 will be completed in FY87 and FY88. Future upgrades will be programmed in the Navy WIP for LHA 1 Class ships.

(3) Joint intelligence centers on LHD 1 Class ships will be equipped with the Naval Intelligence Processing System AN/SYQ-9(V)3.

(4) On the LCCs, the Amphibious Intelligence File (AIF) is maintained as an ASIS file in order to be free from many of the restrictions placed on the amphibious command ship intelligence center. The initial AIF data base is extracted from the NIPS hemispheric data base or the tactical area file, a subset of the former. With the installation of the AN/SYQ-9(V)3 NIPS in the LCCs in connection with the WIP, all intelligence files, including the AIF, will be processed by NIPS computers. All intelligence files on LHAs and LHDs are, or will be, processed by the AN/SYQ-9(V)1 or AN/SYQ-9(V)3 respectively.

401.5 Flag Data Display System (FDDS), AN/USQ-88(V). FDDS is a computer-based information processing and display system being installed in LHDs during construction and in LCCs during modernization.

a. Functions. FDDS will provide CATF and CLF with automated assistance for planning, directing, and monitoring tactical situations. It also provides

access to the Navy Command and Control System (NCCS) ashore via satellite-supported data links. NCCS provides tactically significant information, generated by sources external to the amphibious task force (ATF), including ocean surveillance reports, high-interest alerts, threat summaries, and mission support data such as environmental data and rules of engagement. NCCS receives message output from FDDS on task force status, current ocean surveillance reports, and mission progress. FDDS integrates external source surveillance data obtained from NCCS and other sources with force surveillance data through:

- Automatic correlation of track data and other surveillance information.

- Use of multiple displays and operator consoles that provide the means to create, manipulate, and manually correlate data.

- Generation of tactical situation plots by selectively overlaying specific display data on various display devices, particularly large screen displays.

FDDS provides automated support for manual correlation of data to generate a composite tactical data base containing unit positions, platform identities, and technical data such as sensor and weapon capabilities, indicators of data reliability, and degree of certainty of position locations. The data base aids in the management of electronic warfare, surveillance, communication, and logistic assets. The tactical situation plots and selective overlays aid CATF and CLF in the evaluation of tactical situations and in the determination of operational options available.

b. Interfaces

- CCSC for sanitized combat support data for display and maintenance of FDDS track data files. The sanitized combat support data consists of target and tactical support reports.

- ITAWDS TDS for receipt of navigation data. FDDS uses this data to maintain own ship's position and to convert data to the common reference datum used by FDDS. The navigation data is also used in the processing function that develops and maintains the tactical picture.

- CCTV system for display of FDDS-generated data on selected CCTV monitors and for display of requested CCTV-generated data on selected FDDS monitors.

- TADIL A (Link 11) for receipt and display of force track surveillance data and maintenance of FDDS track data files.

- Officer-in-Tactical-Command Information Exchange System (OTCIXS) for transmission of data to other units and shore stations and for receipt of data from that net for processing and display of nonreal-time track data and the maintenance of FDDS track data files.

- Tactical Data Information Exchange System (TADIXS) for receipt of ocean surveillance data .

- PLRS, through an interface that will make it possible to overlay selected PLRS position location information on FDDS large screen displays (LSDs) in the landing force operations center. PLRS data will not be incorporated into the FDDS data base nor will it be superimposed on other displays on LSDs.

c. Equipment. FDDS is being installed in LHDs as they are built. It will be installed in LCCs in conjunction with the creation of the Tactical Flag Command Center (TFCC) in the LCCs in accordance with the WIP. Creation of the TFCC in LCCs is planned for the 1991-1993 time frame. Paragraph 401.10 describes the TFCC.

FDDS terminals will be located in the following command and control spaces.

LHD 1 Class Ships	LCC 19 Class Ships
Flag Plot	TFCC
LFOC	Flag Plot
CIC	LFOC
JIC	IC
SSES	SUPPLOT
Flag ADP room	Flag EDP room

401.6 Closed Circuit Television (CCTV) System. The CCTV system is a briefing system that provides for remote viewing of briefing presentations, status boards, plotting boards, and other displays by selected viewers. The CCTV system in LCCs and LHAs and the system to be installed in LHDs and LCCs modernized under the WIP are all variations of the AN/SXQ-8(V).

a. Functions. The CCTV system is capable of handling briefing with security classifications up to and including Secret without risk of compromise. The system is controlled from a CCTV control module located in the IC/JIC. The briefing officer can identify viewers before releasing classified material. Presentations may be live or video-taped. In addition to the briefing capability, the CCTV system in LHAs includes two other functionally independent subsystems: a surveillance subsystem and an entertainment and training subsystem. The surveillance subsystem provides surveillance of designated areas of the ship from monitors. Surveillance areas include the flight deck, hangar deck, landing craft well and cargo routes. The entertainment and training subsystem provides compatible VHF signals to TV receivers for the purpose of training and providing entertainment for embarked personnel. Forty-eight receivers are provided for this purpose with additional outlets for personal receivers.

b. Interfaces

(1) There are no signal interfaces between the CCTV system and other ships' systems currently installed in LCCs and LHAs.

(2) The CCTV system installed in LHDs will be able to receive FDDS display data for display on selected CCTV monitors.

(3) The LCC WIP provides for interfaces between the CCTV system and FDDS. It also provides for an interface between the CCTV system and the Tactical Environmental Support System (TESS). TESS automatically receives and processes fleet weather central broadcasts together with environmental data received from ownship and other offboard sources.

c. Equipment. Briefings over the CCTV system may be originated in principal C^2 centers equipped with TV cameras including:

- Flag plot/flag command/TFCC.
- LFOC.
- IC/JIC.
- SACC.
- CIC.
- Meterological room.

CCTV monitors/receivers are located in most command, control, and intelligence spaces.

401.7 Multiplexed Unit for Transmission Elimination (MUTE), AN/SSQ-82(XN-)(V). MUTE is a Navy system capable of monitoring and controlling all permanently installed electromagnetic and acoustic emitters aboard Navy ships. Its purpose is to provide centralized control and monitoring of all shipboard radiating systems in order to be able to rapidly assume an emission control (EMCON) posture on all shipboard transmitters. If EMCON conditions are ordered into effect, the electronic warfare (EW) supervisor in the CIC, using MUTE, can rapidly shut down preselected or all emitters in accordance with EMCON orders.

The command response unit of the shipboard PLRS master station will be modified to provide a dedicated output connector for an interface with MUTE. This interface is not for data exchange but is an electronic connection that provides the EW supervisor with the capability to monitor and control PLRS transmission emanating from the ship.

401.8 Systems Supporting the Ship's Signals Exploitation Space (SSES). LCCs, LHAs, and LHDs have SSESs that provide special intelligence support to CATF, CLF, and ship's command personnel. In LHDs and modernized LCCs, the CCSC will provide sanitized combat support data to the FDDS and NIPS for display and maintenance of track and intelligence files, respectively. The CCSC will also provide track data to the TDS/CDS.

401.9 Shipboard MTACCS Interface Controller (SMIC). Various specifications, studies, concepts, and Navy WIP documents identify requirements for interfaces between the MTACC systems being installed, or to be installed in LHD and LCC Class ships and between those MTACC systems and Navy C^2 systems. A device,

currently called a SMIC, is identified in many of the documents as providing the required interfaces. The SMIC is proposed as the interface between PLRS and FDDS, between PLRS and NAVSTAR GPS, and between PLRS and the ship's navigation system. The SMIC is also proposed as the shipboard interfaces between PLRS, MIFASS, and TCO and between the Shipboard MTACC systems and other LHD, LCC, and LHA C^2 systems as may be required in the future.

401.10 Tactical Flag Command Center (TFCC). The TFCC, as its name states, is a center and not a system. However, its creation within LCCs under the WIP is of significant interest to the Marine Corps and merits a brief description in this section.

The requirement exists to provide CATF, when embarked in an LCC, with the capability to effectively employ an amphibious task force and to monitor and control the assault phase of a division-size amphibious landing. The TFCC of the LCC will be the principal command and control facility for all operations and missions performed in support of the embarked commander as a CATF/numbered fleet commander. Through the integration of offship data sources, shipboard and remote sensors, and organic data sources, the embarked commander will be provided with a comprehensive picture of the strategic and tactical situation. His ability to make command decisions regarding force operations will be enhanced, whether he is engaged in fleet operations, amphibious operations, or both simultaneously. The TFCC will also provide the capability to communicate orders, directives, and intelligence to forces commanded; advisory information to other operating forces; and action and intelligence reports to higher echelons of command, including national command authorities. The TFCC will provide facilities for coordination of antiair defensive and offensive planning, strike warfare coordination and control, and the operation of a fleet antiair warfare center (FAAWC). Through the use of FDDS, NIPS, OTCIXS, TIPS, CDS, CCSC, and communication and data links, the TFCC will provide the facilities for effective control and coordination of the diverse components of the LCCs' command and control system and supporting ships, aircraft, and land-based elements.

The TFCC will provide the embarked commander, whether CATF or numbered fleet commander, with facilities for collecting, displaying, evaluating, and disseminating tactical and command information for effective employment of his forces in the amphibious, sea control, and power projection roles. Specific functions to be accomplished are:

- Exercise of overall command.
- Provide the capability to override actions of subordinate commanders.
- Display strategic and tactical information in real time and on static displays.
- Monitor all operations of assigned forces.
- Communicate, in real time, with assigned forces and other commands, including the highest command authority.

402 ARMY SYSTEMS

This section describes Army TDSs for which there are identified Marine Corps TDS interoperability requirements.

The Army Command and Control System (ACCS) Concept describes the architectural framework for a hierarchical network of systems, facilities, and attendant communications which permit the effective use of computer technology to support the command process. Basically, it is a distributive processing network of computers tying together the functional areas of maneuver, fire support, air defense, intelligence/electronic warfare, and combat service support control. Figure 4-1 depicts the ACCS concept structure.

402.1 Maneuver Control System (MCS). MCS is a C^2 system that provides the Army maneuver unit commander and his G-3/S-3 at corps echelons and below with automated assistance needed to execute real-time command and control of combat forces. MCS software is being implemented in Ada.

a. Functions. MCS hardware and software are modular. The system can be configured to support a corps comprising armor, infantry, mechanized, airmobile, or airborne divisions, separate brigades, and an armored cavalry regiment. MCS will be located at corps, division, brigade, battalion, cavalry regiment and cavalry squadron. Terminals are also required at the operational facilities of combat service support, fire support, air defense artillery, and intelligence/EW units to provide interfaces with MCS. MCS has the capabilities to:

- Exchange information between all echelons from battalion to corps over existing standard, and planned Army communication systems.
- Edit, compose, and validate messages.
- Provide prompts to assist message composition.
- Manage system data and format data for presentation.
- Provide a graphic display of the battlefield.
- Integrate nondevelopmental items with MIL-STD equipment to satisfy user requirements.
- Incorporate remote terminals and a local area network.

b. Interfaces

- Army systems:
  - Combat Support Air Traffic Management System (CSATMS).
  - Army Data Distribution System (ADDS).
  - Tactical Fire Direction System (TACFIRE).
  - Advanced Field Artillery Tactical Data System (AFATDS).

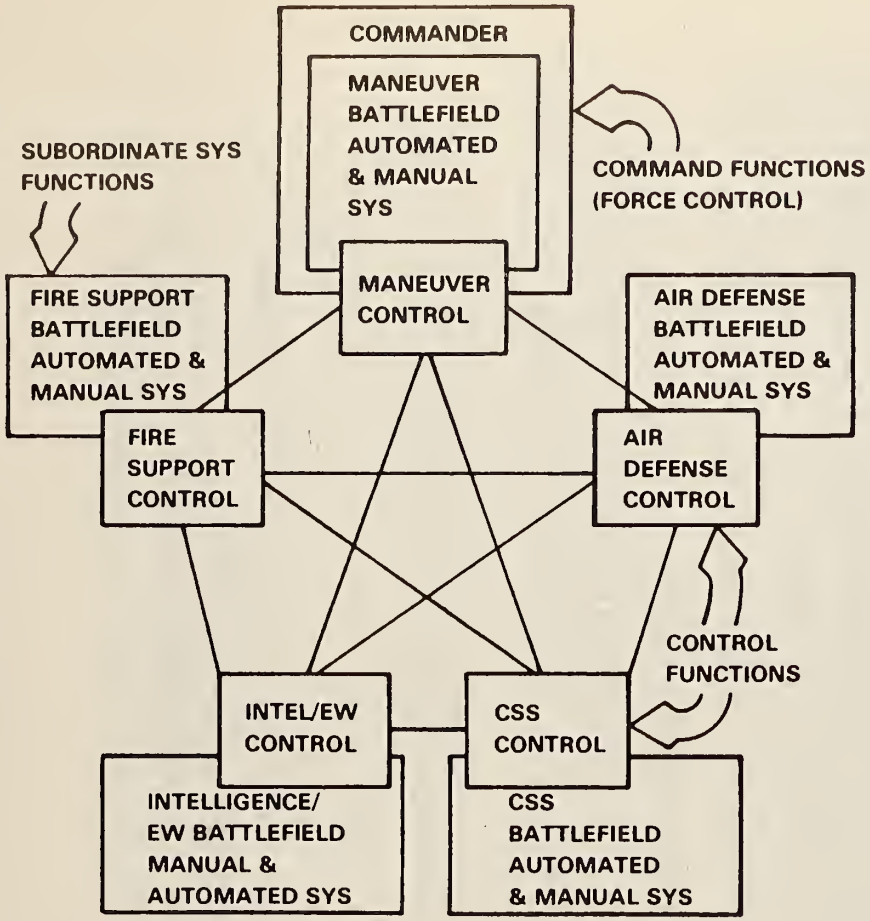

TACTICAL ARCHITECTURE

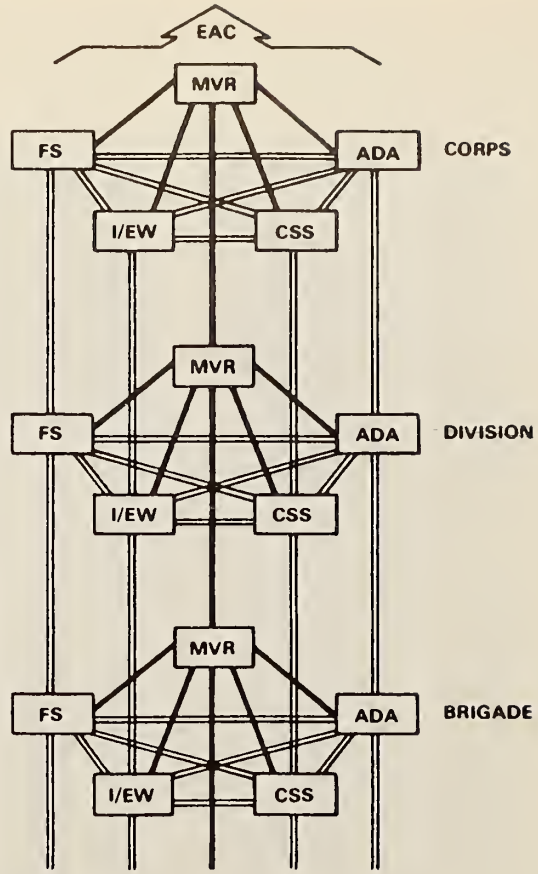

MCS STRUCTURE

LEGEND

ADA AIR DEFENSE ARTILLERY
CSS COMBAT SERVICE SUPPORT
EAC ECHELONS ABOVE CORPS
FS FIRE SUPPORT
I/EW INTELLIGENCE/ELECTRONIC WARFARE
MVR MANEUVER/MCS

Figure 4-1. Army Command and Control Subordinate Systems

- All Source Analysis System (ASAS).
- Short Range Air Defense-Command and Control System (SHORAD C^2).
- Tactical Army CSS Computer System (TACCS).
- MCS at other echelons.

- Joint and Other Service
  - Worldwide Military Command and Control System (WWMCCS).
  - NAVSTAR Global Positioning System (GPS).
  - Tactical Air Command Center-Computer Assisted Force Management System (TACC-CAFMS) (Air Force).
  - Integrated Tactical Amphibious Warfare Data System (ITAWDS) Tactical Data System (TDS) (Navy).
  - Tactical Combat Operations (TCO) System (Marine Corps).
- NATO Systems
  - HEROS - German C^2 system.
  - WAVELL - United Kingdom C^2 system.
  - SACRA - French corps- and division-level C^2 system.
  - TACCDAS - Canadian Forces C^2 system.

c. Equipment. MCS is being developed under an evolutionary program with continuous field-user testing and feedback to drive system enhancements. The Tactical Computer Terminal (TCT) AN/UYQ-30 has been developed and is deployed with selected tactical units. The Tactical Computer Processor (TCP) AN/UYQ-43 and the Analyst Console, AN/UYQ-43 (V2 and V3) are commercial nondevelopmental items that will provide noncritical, added capability to the TCT.

The TCT is a militarized, compact, general purpose data processing, display, and communication system intended for Army field use at all echelons in a variety of mobile tactical applications. It is designed to facilitate the collection, generation, review, analysis, and distribution of tactical information. The TCT provides 2 communications channels. The TCP and analysts console are scheduled to be fielded initially in 1988 or 1989. A typical installation in a division headquarters comprises two TCTs, 16 TCPs and 18 analyst consoles.

402.2 All Source Analysis System (ASAS). ASAS is a multishelter, transportable, semiautomatic tactical intelligence and electronic warfare system with integral communication capabilities. It will provide processing and analysis of sensitive compartment information (SCI) and collateral data.

a. Functions

- Intelligence data processing.
- Combat information processing.
- Single-source analysis and correlation.
- Multisource analysis and correlation.
- Situation development.
- Target development.
- Collection management.
- Electronic warfare (EW) support.
- Operations security support.

b. Interfaces. ASAS interfaces with other systems will include various Army and Air Force sensor, target acquisition and EW systems, and related other-source intelligence systems. The ASAS/Enemy Situation Correlation Element (ENSCE) Interface Module with its remote workstation will be the interface with other Army command, control, and subordinate systems and with the Air Force ENSCE. The ASAS interface with the MAGIS IAC will be through the general service and special security communication centers.

c. Equipment

ASAS comprises various modules that are grouped in protected enclosures, called enclaves, tailored to meet the needs of the supported commander at Army brigade, division, corps, and echelons above corps. The modules include:

- Intelligence data processing (IDP) module in an S-280 shelter.
- Electronic support module in an S-280 shelter.
- Communications processor interface (CPI) module in an S-280 shelter.
- Radio module in an S-250 shelter.
- Forward sensor interface and control (FSIC) module in an S-250 shelter.
- ASAS/ENSCE interface module (AIM) in an S-250 shelter.

ASAS is being developed under the Joint Tactical Fusion Program (JTFP)/All Source Analysis System (ASAS). The JTFP was established in 1981 at congressional direction. It combines Army and Air Force efforts to develop an automated tactical intelligence fusion and correlation system. The goal is to develop a means of correlating and interpreting the massive volumes of raw intelligence data available to tactical commanders. The objective is to develop ASAS for the Army and ENSCE for the Air Force in a joint program that

ensures the greatest possible commonality of hardware and software, and interoperability. The acquisition strategy for ASAS/ENSCE follows an evolutionary development approach. A small number of baseline systems will be fielded beginning in FY86. These systems will employ off-the-shelf and minimum-development hardware and software to achieve a limited functional capability in multiple operational environments. Then, through a series of preplanned product improvements and continuous software growth, the system will evolve to meet the full level of performance envisioned in the requirements documents.

402.3 Tactical Fire Direction System (TACFIRE). TACFIRE is an artillery fire direction and C^2 system.

a. Functions. TACFIRE provides automated assistance for:

- Performing tactical and technical artillery fire control.
- Performing artillery survey computations.
- Planning conventional and nuclear fires.
- Processing and disseminating target intelligence.
- Analyzing targets for high explosive, chemical, and nuclear munitions.
- Reporting the status of firing units and ammunition.
- Storing and applying meteorological data.

b. Interfaces

- Battery Computer System AN/GYK-29.
- Meteorological Data System AN/TMQ-31.
- Mortar Locating Radar AN/TPQ-36.
- Artillery Locating Radar AN/TPQ-37.
- Remotely Piloted Vehicle (RPV).
- Digital Message Device, AN/PSG-2( ).
- Multiple Launch Rocket System (MLRS) Fire Direction System.
- Army Tactical Missile System (TACMS).
- Elevated Target Acquisition System (ETAS).
- Airborne Target Handoff System (ATHS).
- Field artillery control systems of NATO allies.
- Enhanced Position Location Reporting System (EPLRS)

c. Equipment

TACFIRE comprises five principal components:

- A digital message device (DMD) employed by forward observers.

- A variable format message entry device (VFMED) employed by artillery liaison officers at supported battalion, brigade, division, and corps fire support elements.

- A computer system at artillery battalion and division artillery fire direction centers (FDCs).

- A display terminal at the firing batteries. This display has been replaced by the Battery Computer System AN/GYK-29.

TACFIRE is operational. It will be replaced by the AFATDS starting in the late 1980s.

402.4 Advanced Field Artillery Tactical Data System (AFATDS). AFATDS will be the fire support control functional segment of ACCS. It will provide automated support to fire support personnel in the ACCS by assisting in achieving effective and efficient coordination of field artillery with other fire support assets and effective and efficient integration of fire support with the operations of maneuver elements. All cannon, rocket, and missile units in the active and reserve forces will employ AFATDS. It will be used at fire support elements (FSEs) located with maneuver battalions, brigades, divisions, corps, and at field artillery command posts from the field artillery firing unit to echelons above corps. AFATDS will provide automation support for the planning, coordination, control, and execution of close support, counterfire, interdiction, and suppression of enemy air defense. It will support deep operations, nuclear, nonnuclear, and chemical fire planning and the coordination of the employment of all fire support assets to support maneuver unit commanders.

a. Functions. AFATDS functions, listed in the order of priority for development of the software required to perform those functions, are:

- Maintaining a record of the status of fire units and fire missions.

- Performing tactical fire direction to include performing target processing, selecting the appropriate system to attack the target, and issuing the necessary orders for the attack.

- Developing fire support plans.

- Conducting field artillery sensor operations.

- Developing the target acquisition support plan.

- Performing target damage assessment analyses.

- Developing the artillery survey plan and receiving, maintaining, and disseminating survey data.

- Managing the process of acquiring and disseminating meteorological data.

- Managing the movement/displacement of field artillery units.

- Providing field artillery mission support to include data processing support for logistics planning and supply, maintenance, and personnel control functions required for operational control.

- Performing technical fire direction. The Battery Computer System (BCS), the Backup Computer System (BUCS), and the MLRS Fire Direction System will continue to provide technical fire direction capabilities until the technical fire direction function is developed for AFATDS.

b. Interfaces. The hardware and software capabilities of AFATDS will facilitate interfaces with other TDSs. Interoperability can also be achieved through the deployment of AFATDS-equipped liaison sections.

- AFATDS will interoperate with the control systems of the other ACCS functional areas. The interface will use established ACCS message formats and protocols. The primary interface point will be at the FSEs located with the maneuver unit operations centers.

- During the transition from TACFIRE to AFATDS, AFATDS will interoperate with TACFIRE using TACFIRE message formats and protocols.

- AFATDS will interoperate with ADDS.

- AFATDS will interoperate with all field artillery TDSs; e.g., BCS, Firefinder Radar, meteorological data system, and digital message device; using TACFIRE-compatible message formats and protocols. When TACFIRE is phased out of the inventory, the remaining systems will use more efficient AFATDS message formats and protocols.

- AFATDS will interoperate with MIFASS using agreed on TADIL-J bit oriented fire support message formats and protocols.

- There are currently no Air Force or Navy TDSs for which interface requirements have been identified.

- AFATDS will interoperate with allied fire support and field artillery systems using agreed on international standards.

- AFATDS will be capable of using JINTACCS message formats.

c. Equipment. AFATDS modular system software will be written in the standard DoD language, Ada. Current plans are for AFATDS to incorporate nondevelopmental items from the hardware chosen for the ACCS. Principal components of the system will include:

- Fire support terminal (FST).
- Fire support computer unit (FSCU).
- Program load unit (PLU).
- Local area network (LAN).
- Power converter group (PCG).
- Communications control system (CCS).
- Auxiliary memory module.
- Large screen display (LSD).
- Electronic printer (EP).
- Forward entry device (FED).

Components will be grouped by function and in the number needed to meet the specific requirements of individual operational facilities and action elements.

AFATDS is currently undergoing system design and software development. AFATDS software is being developed sequentially with distinct software revision upgrades in two year cycles. Fielding of the initial hardware and phase I software is planned for FY88.

402.5 Missile Minder, AN/TSQ-73 (Army Air Defense Command Post (AADCP)). The AN/TSQ-73 is a mobile, tactical, fully automated air defense fire distribution system. It provides the air defense artillery (ADA) brigade and battalion commanders the means by which the high and medium air defense (HIMAD) activities of their units are controlled.

a. Functions. The AN/TSQ-73 brigade fire distribution center provides a real-time information display of the air battle situation in the corps tactical area. It provides for the exchange of information with adjacent ADA brigades and other air defense units. The ADA battalion AN/TSQ-73 provides the same capability at the system at the corps AADCP.

b. Interfaces

- Patriot Information Coordination Central (ICC).
- HAWK ICC and platoon command post (PCP).
- Short Range Air Defense (SHORAD) C^2 System.
- Air Defense Artillery Control System.
- Air Force Message Processing Center (MPC).
- German Air Defense Ground Environment (GEADGE).
- Marine Corps TACC/TADC and TAOC by radio or cable using TADIL B/TADIL J.

c. Equipment. Operational.

402.6 Patriot Information Coordination Central (ICC), AN/MSQ-116. The Patriot ICC is a mobile, tactical, fully automated fire distribution system.

a. Functions. The Patriot ICC controls up to six Patriot missile batteries and coordinates their operations with those of adjacent battalions and higher headquarters. It performs target tracking, threat evaluation and identification, and weapons assignment.

b. Interfaces

- Missile Minder AN/TSQ-73.
- Air Force Message Processing Center.
- Marine Corps TAOC using TADIL B.
- German Air Defense Ground Environment (GEADGE).
- Air Defense Artillery Control System.

c. Equipment. Operational.

402.7 Hawk Information Coordination Central (ICC) AN/MSQ-110 and Platoon Command Post (PCP), AN/MSW-13. The ICC Is the automated fire control system of the Hawk battery. The PCP is the fire control system for a separately deployed Hawk platoon.

a. Functions. The ICC computer performs automatic assist in air track surveillance, identification, threat ordering, and semi-automatic weapons assignment. The PCP performs the same functions as the ICC as well as housing the control console for the platoon. The digital computers in the ICC and PCP are the same.

b. Interfaces

- Missile Minder AN/TSQ-73.
- Marine Corps TAOC.

c. Equipment. Operational.

402.8 Mobile Army Ground Imagery Interpretation Center (MAGIIC), AN/TYQ-11(V)4. MAGIIC is an integral component of the Army Aerial Reconnaissance and Surveillance (ARS) System employed at echelons above corps.

a. Functions. MAGIIC facilitates the rapid exploitation of imagery collected by ARS sensors and imagery made available by Army, other Service, national, and NATO assets. MAGIIC will be used primarily for processing all hard copy aerial imagery recorded by Air Force and National assets.

b. Interfaces

- All Source Analysis System.

- MAGIS IAC via general service and special security communication centers.

c. Status. Operational. Each MAGIIC consists of an imagery augmentation shelter and an auxiliary shelter. Both shelters maintain identical intelligence data bases to allow independent operation during displacement.

402.9 Army Data Distribution System (ADDS). ADDS will comprise two independent but in many respects similar systems. They are the Enhanced Position Location Reporting System (EPLRS) and the Joint Tactical Information Distribution System (JTIDS). Formerly, the two systems were joined in a program known as the PLRS/JTIDS Hybrid (PJH). JTIDS is described in section 509.8. Marine Corps PLRS is described in section 303. The two systems as they apply to ADDS are described in this section.

a. Functions. In the ADDS, EPLRS will provide data communications support for weapon systems, sensors, and C^2 elements that have relatively low data throughput requirements. This function is in addition to PLRS functions of providing position location, navigation, and identification information to C^2 systems and units equipped with enhanced PLRS user units (EPUUs). JTIDS is a broadcast and point-to-point information distribution system that also provides position location and navigation information to its users. JTIDS terminals will provide communication support to weapon systems, C^2 elements and other key facilities of Army ADA units that require a high volume of data throughput.

b. Interfaces. Project managers for systems that will use JTIDS are responsible for providing interfaces with other systems as required. A frequency shift key (FSK) interface unit has been developed for the EPUU to allow a transparent interface between existing battlefield automated systems and the EPLRS communication net.

(1) EPLRS will be compatible with Marine Corps PLRS and will interoperate with Army systems such as:

- TACFIRE/AFATDS.
- BCS.
- Digital Message Device (DMD).
- MCS.
- AN/TPQ-36 and AN/TPQ-37 radars.
- Variable Format Message Entry Device (VFMED).
- Airborne Target Handoff System (ATHS).
- Forward Area Air Defense Command, Control, and Intelligence ($FAADC^2I$).

(2) JTIDS will interoperate with various Army ADA host systems such as:

- AN/TSQ-73 (Missile Minder).
- HAWK Improved Platoon Command Post.
- Patriot Information Coordination Central (ICC).
- $FAADC^2I$.

c. Equipment

(1) EPLRS. EPLRS will be assigned to corps, divisions, separate brigades, and armored cavalry regiments to support all functional areas. It is planned to achieve an IOC in 1988 EPLRS equipment will include:

- EPLRS Net Control Stations (NCS-E), a PLRS master station with enhanced communication and computer capabilities.
- Enhanced PLRS User Units (EPUUs), PLRS UUs with enhanced communication capabilities.
- Enhanced PLRS Relay Units (EPRUs), enhanced PLRS auxiliary ground units (AGUs).

(2) JTIDS. JTIDS will be assigned to echelons above corps, corps, and divisions to support ADA units. It is planned to achieve an IOC in 1991. JTIDS equipment will include:

- JITDS Net Control Stations (NCS-J).
- JTIDS Class 2M Terminals (JTs).
- Dedicated JTIDS Relay Units (DJRUs).

403 AIR FORCE SYSTEMS

The Air Force Tactical Air Control System (TACS) is a modular C^2 system that provides the elements through which planning, direction, and control of tactical air operations take place. Under the direction of the tactical air control center (TACC-AF), the subordinate elements perform three mission types:

- Air defense and airspace management.
- Close air and reconnaissance support of ground forces.
- Interdiction and offensive counterair tasks.

Figure 4-2 depicts the Air Force TACS.

Principal elements of the TACS of interest to the Marine Corps are described in this section.

403.1 Airborne Warning and Control System (AWACS), E-3A. AWACS is an airborne warning and control system. Its sophisticated and versatile, long-range surveillance radar and control center enhances the effectiveness of air defense systems by providing real-time, all-altitude, and beyond-the-horizon target detection, identification, and tracking.

a. Functions. AWACS provides:

- Deep-look surveillance to detect preparations for the initiation of hostile air action.
- Track data to ground units providing commanders with an accurate picture of the air battle and increasing their early-warning time and air defense effectiveness.
- Direction for fighter/interceptor aircraft against enemy aircraft.
- Control of friendly aircraft in support of ground forces.
- Communication relay for ground commanders.
- Monitoring of naval activity.
- Enroute command and control for a deploying force.

b. Interfaces. Interfaces currently exist or will be developed to provide interoperability with the following systems:

- Message Processing Center (MPC), AN/TYC-10--TADIL A.
- Modular Control Equipment (MCE), AN/TYQ-23--TADIL A.
- Marine Corps tactical air operations center (TAOC) AN/TYQ-2 and AN/TYQ-3A. Future AN/TYQ-23--TADIL A.

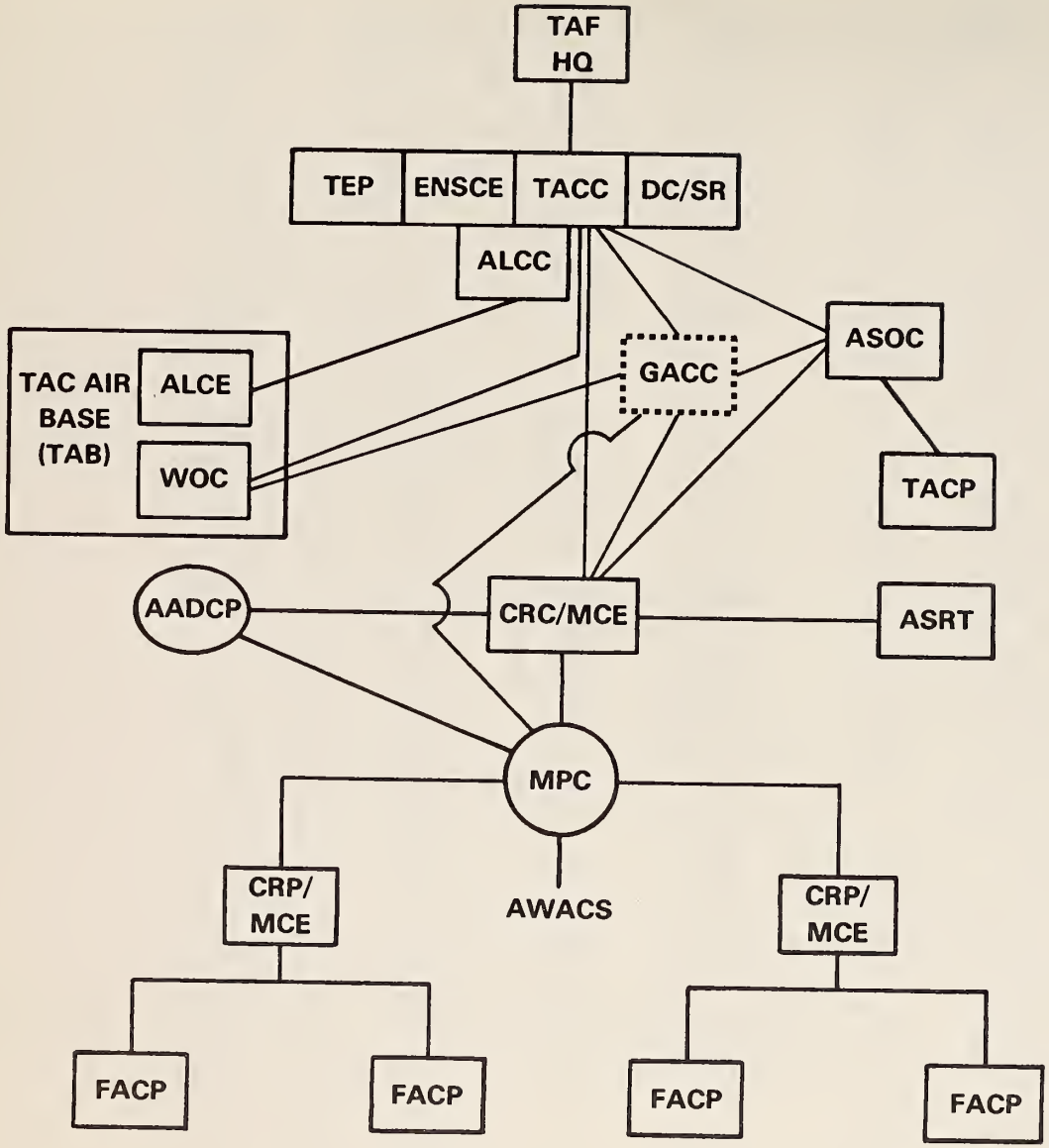

LEGEND

ALCC	Airlift Control Center
ALCE	Airlift Control Element
ASOC	Air Support Operations Center (Formerly DASC)
ASRT	Air Support Radar Team
AWACS	Airborne Warning and Control System
CRC	Control and Reporting Center
CRP	Control and Reporting Post
DC/SR	Display and Control/Storage and Retrieval
ENSCE	Enemy Situation Correlation Element
FACP	Forward Air Control Post
GACC	Ground Attack Control Capability (Future)
MCE	Modular Control Element
MPC	Message Processing Center
TACC	Tactical Air Control Center
TACP	Tactical Air Control Party
TEP	Tactical ELINT Processor
WOC	Wing Operations Center

Figure 4-2. Air Force Tactical Air Control System

- Marine Corps tactical air command center (TACC) AN/TYQ-1 and AN/TYQ-3A. Future ATACC--TADIL A.

- Army Air Defense Command Post AN/TSQ-73--TADIL A.

- German Air Defense Ground Environment (GEADGE)--NATO Link 1.

- NATO Air Defense Ground Environment (NADGE)--NATO Link 1.

- United Kingdom Air Defense Ground Environment (UKADGE)--NATO Link 1.

- Navy Tactical Data System (NTDS)--TADIL A.

- Airborne Tactical Data System (ATDS)--TADIL A.

- Aircraft--TADIL C with appropriately equipped aircraft.

The E-3A currently uses the Interim JTIDS Message Specifications (IJMS) message standards. NATO Forces also use the IJMS message standards. The TAOM and ATACC will use TADIL J message standards. There is currently no plan to provide for the use of IJMS message standards with the TAOM or ATACC. The planned IOC for the TAOM with a JTIDS-TADIL J capability is 1994. The schedule for integration of JTIDS-TADIL J with the ATACC is not yet defined. When TADIL J is implemented in the TAOM and ATACC, each will have a TADIL J interface capability with the AWACS if TADIL J has been implemented in the AWACS.

c. Equipment. Operational.

403.2 Control and Reporting Center (CRC)/Control and Reporting Post (CRP) Information Processing Module, AN/TSQ-91. The AN/TSQ-91 supports CRCs and CRPs. CRCs/CRPs are the air defense and air space management agencies of the Air Force TACS.

a. Functions. A CRC is assigned tasks and receives allocations of weapons from the Air Force TACC to which it reports. It receives information from ground-based and airborne sensors including those of CRPs, forward air control posts (FACPs), and AWACS. The CRC establishes air defense warning conditions, scrambles or diverts air defense capable aircraft, and, by joint agreement, assigns targets to the Army's surface-to-air missile units through the AADCP. CRPs are subordinate to the CRC and have similar capabilities. They provide radar surveillance and control within assigned sectors and can assume CRC functions when required. The functions of the CRC and CRP are comparable to those of the Marine Corps TAOC.

b. Interfaces. Interfaces with other elements of the Air Force TACS, other Service and NATO air control, and air defense systems are provided by the Message Processing System (MPC), AN/TYC-10.

c. Equipment. The AN/TSQ-91 is operational. It will be replaced by the AN/TYQ-23 MCE, which will perform the functions of both the AN/TSQ-91 and the AN/TYC-10 MPC. The Air Force is scheduled to receive its first production MCEs in FY90.

403.3 Message Processing Center (MPC), AN/TYC-10. The MPC is the interface control unit for the Air Force TACS. It is employed in support of CRCs and CRPs.

a. Functions. The MPC is the primary elements of the Air Force TACS that provides for the automatic exchange of data with other Service and NATO air defense systems.

b. Interfaces. The MPC provides a TADIL B link with and between CRCs/CRPs, the AN/TSQ-73 AADCP, and Marine Corps TACC and TAOC. The MPC also provides an interface with the Special Information System (SIS) in accordance with JCS Pub 10. It provides the capability to convert TADIL A messages to TADIL B messages and vice versa. MPC also provides a TADIL A link with the Navy's ATDS and NTDS and a NATO Link 1 interface for connectivity with NATO air defense systems.

c. Equipment. The MPC is operational. It will be replaced by the Modular Control Element (MCE), AN/TYQ-23, an Air Force adaption of the Marine Corps AN/TYQ-23 Tactical Air Operations Module (TAOM). Initial delivery of MCEs to the Air Force is scheduled for in FY90.

403.4 Enemy Situation Correlation Element (ENSCE). ENSCE is a multishelter, transportable, semiautomatic tactical intelligence and electronic warfare system with integral communication capabilities. It is being developed under the Joint Army and Air Force ASAS/ENSCE Program described in section 402. The ENSCE does not include the Forward Sensor Interface and Control (FSIC) module which is an element of the ASAS. In addition to the functions included in the ASAS, ENSCE also provides a weaponeering capability. ENSCE will achieve an IOC in 1986. It will be interoperable with the ASAS.

403.5 Tactical Information Processing and Interpretation System (TIPI). TIPI is a family of equipment, similar to MAGIS, supporting Air Force intelligence processing, exploitation, and analysis functions.

a. Functions

- The Display and Control/Storage and Retrieval (DC/SR) segment performs intelligence data base maintenance, preplanned targeting, and weaponeering.

- The Imagery Interpretation (II) segment is an automated imagery interpretation element providing automated data base, location, and report formatting to the photographic interpretation process.

- The Manual Radar Reconnaissance Exploitation System (MARRES) is a fixed installation that provides the radar analyst with the equipment required to exploit side-looking airborne radar (SLAR) imagery.

- The Tactical ELINT Correlator (TEC) receives electronic intelligence (ELINT) data from various sources and performs analyses, correlation, and sanitization of the data to provide centralized electronic order of battle in support of the DC/SR.

b. Interfaces. The DC/SR will exchange data with the MAGIS IAC through the general service and special security communication centers. DC/SR will also have an interface with ASAS and ENSCE.

c. Equipment. TIPI components include:

- The DC/SR segment.
- The II segment.
- The MARRES.
- The TEC.

The Segments of TIPI are operational.

404 JOINT SERVICE TACTICAL DATA SYSTEMS

404.1 Worldwide Military Command and Control System (WWMCCS)

404.1.1 Description. WWMCCS, from its origin in the 1960's, was designed to provide the means for the National Command Authorities, the Joint Chiefs of Staff, and the commanders in chief of the unified and specified commands to plan, direct, coordinate and control the operational activities of U. S. military forces in peacetime, crisis, or war. The principal military functions to be controlled through WWMCCS were those embodied in the Nuclear Planning and Execution (NPE) and Tactical Warning and Attack Assessment (TW/AA) systems; the planning and execution functions for conventional war were not included.

From the outset, WWMCCS comprised the people, the facilities, hardware, software and the communications necessary to support command and control functions.

404.1.2 WWMCCS Intercomputer Network (WIN). WIN was designed and installed to link computers in the headquarters of the unified and specified commanders with those in the Service headquarters, the office of the Joint Chiefs of Staff, and with their alternate command centers. Through a series of evolutionary changes, the NPE and TW/AA support functions were separated from the WWMCCS/WIN structure. As a result, NPE and TW/AA are supported by a unique computer/communications networks distinct from WWMCCS/WIN. However, interfaces with the WIN, where necessary, may be installed.

The principal functions now supported by the WIN are those which were originally excluded from the WWMCCS: planning, directing, and executing conventional war.

404.1.3 WWMCCS Information System (WIS). WWMCCS originally included a subsystem designated as the WWMCCS Standard Automated Data Processing (ADP). This subsystem is being modernized to include the WWMCCS standard ADP and related software systems, procedures, and supporting intra-site telecommunications, and is identified as the WIS.

WIS will be used at the national, theater, and supporting levels of command to support uni-Service, joint, and combined operational planning and execution in peacetime, crisis, and in war. WIS supports the Resource and Unit Monitoring (RUM) and Conventional Planning and Execution (CPE) functions, which are further expanded in the Joint Operation Planning and Execution System (JOPES). Specifically, WIS will support the following JOPES functional areas:

- Threat identification and assessment.
- Strategy determination.
- Course of action development.
- Detailed planning.

- Implementation.
- Simulation and analysis.
- Monitoring.

WIS, as a single, interactive, interrelated, global system, will support the requirement that valid, timely information be available to commanders planning and executing military operations. Any command or agency within the WIS community will be able to communicate and interact with any other command or agency in accordance with approved procedures and security measures. WWMCCS is protected for information classified up to TOP SECRET. A key part of the operational value of WIS is the service- and command-unique portion of WIS which provides the information necessary for joint planning and execution functions.

404.1.4 Marine Corps WWMCCS Information System (MARWIS). By the end of FY88, MARWIS terminals are to be installed at the peacetime headquarters of all major Fleet Marine Force commands, as well as MCLB, Albany. These installations, along with those serving HQMC (Marine Corps Command Center, Alternate National Military Command Center, and the Installations and Logistics Department) will provide the means for the rapid reporting of readiness, for the identification of personnel and logistics requirements and for the direction of efforts to satisfy those requirements.

Figure 4-3 illustrates present and planned participation in WWMCCS by Marine Corps commands. The MARWIS terminals at the home bases of the Fleet Marine Force commands shown are linked through the WWMCCS computers located in Korea, Hawaii, Washington, London, or Norfolk with all other members of the system. Marine Corps commands routinely will be able to enter data into and receive data from WWMCCS within their own chain of command. When required, and through special, rapidly-enacted arrangements, Marine Corps commands may exchange data with other commands not in their own command chain. When required, the FMF MARWIS terminals may be deployed with their commanders. In such cases, the controlling unified commanders will determine and arrange for the necessary connectivity.

404.2 Navigation System Using Timing and Ranging (NAVSTAR) Global Positioning System (GPS). GPS is a worldwide, space-based, radio-navigation system.

a. Functions

- GPS user equipment (UE) will display three dimensional position location information with a spherical error probable of 10 meters.
- Position location information can be provided in the military grid reference system or in latitude and longitude. Altitude and system time are provided with both reference systems.
- The user may input target or reference point coordinates and receive range and bearing from his position to the target or reference point.

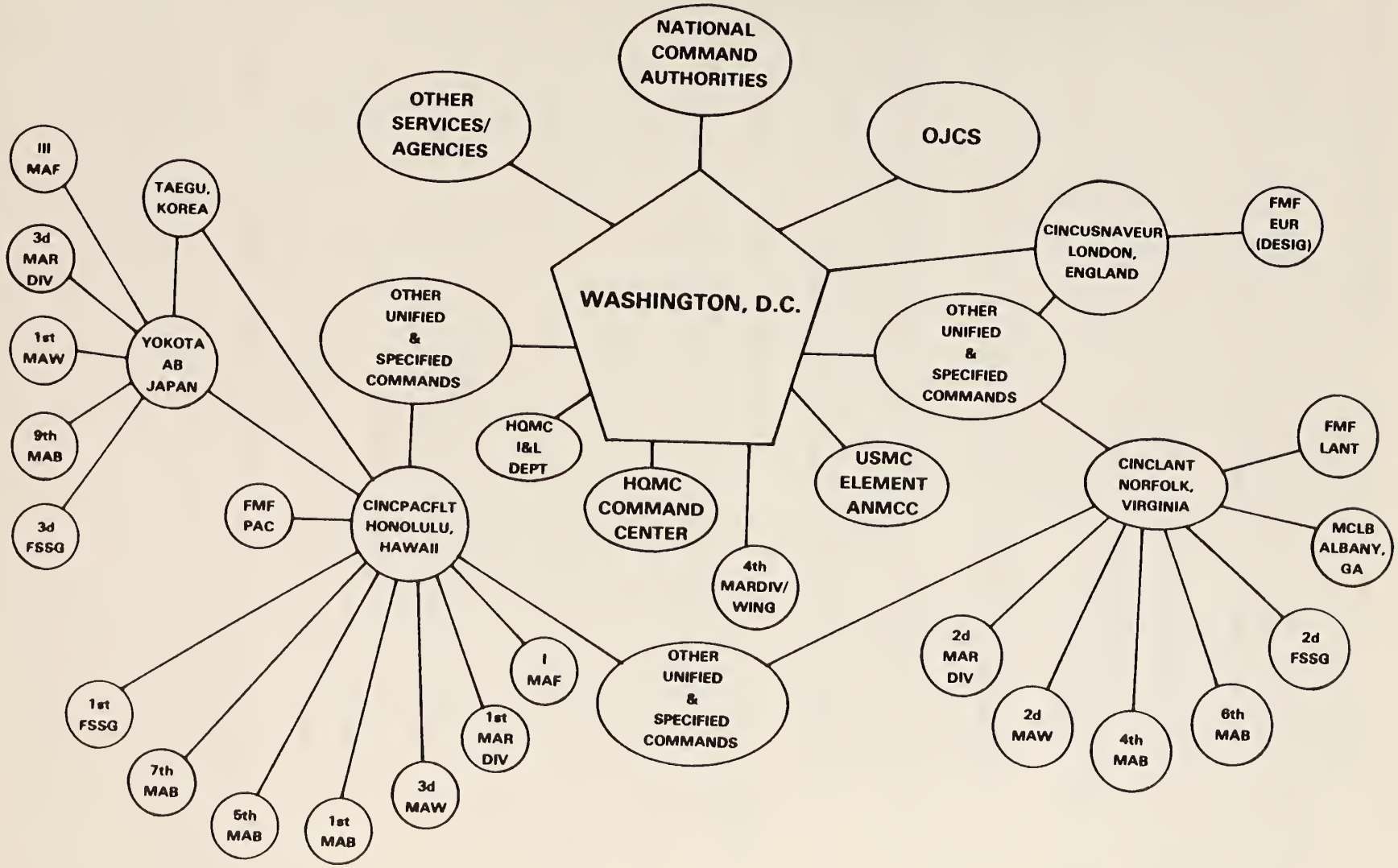

Figure 4-3. Marine Corps WWMCCS Connectivity

- Airborne UEs--medium/high dynamic sets--can obtain ground speed and bearing and time to selected way points.

b. Interfaces. GPS is ideally suited for updating inertial navigation systems and complementing relative navigation systems such as PLRS and JTIDS. UEs will have an interface connector to facilitate electronic transfer of UE-derived GPS position location information and time to other systems. Specific requirements exist for interfaces with PLRS, PLRS-JTIDS hybrid, and JTIDS. The IOC for the PLRS-GPS interface is 1991.

c. Equipment. NAVSTAR GPS comprises three major segments:

- The space segment consists of 18 satellites in six orbital planes.

- The ground control segment consists of three or more widely separated, permanently located monitoring stations and one master control station.

- The user segment consists of an unlimited number of passive users equipped with either low dynamic sets or medium/high dynamic sets. UEs passively receive GPS signals from any four satellites and convert the data to three dimensional position location information, velocity, and system time.

An IOC is planned for FY91. Minimum Marine Corps distribution of manpack and vehicular UEs include:

• Infantry regiments	4
• Artillery Battalions	2
• Air/naval gunfire liaison companies	18
• Topographical platoon	6
• Force reconnaissance company	18
• Light anti-aircraft missile batteries	4
• Marine air traffic control squadrons	5
• Marine air control squadrons	2
• Marine air support squadrons	3
• FMF contingency stocks	36
• Marine Corps Reserve Units (Total)	90

UEs will be provided via standard Navy channels for installation in Marine Corps aircraft.

405 NATO TACTICAL DATA SYSTEMS

This section describes NATO TDSs with which Marine corps TDSs may have a requirement to exchange information. Except in the case of the NATO Air Defense Ground Environment (NADGE) and the German Air Defense Ground Environment (GEADGE), interfaces of NATO TDSs with Marine Corps TDSs are not defined.

Because of the level of classification of information concerning many of the NATO nation TDSs, only limited data have been available for inclusion in this section. No unclassified information was available on the Italian artillery system, SAGAT. Additional information on classified NATO TDSs is contained in the current edition of the Army Battlefield Interface Concept (ABIC) (U) (CONFIDENTIAL) and the Secret appendix thereto.

405.1 Wavell. Wavell is a computer-based C^2 system of the British Army.

a. Functions. Wavell is a mobile command information system designed to meet division and brigade staff requirements in the operations control and intelligence functional areas.

b. Interfaces. The U.S. Army has a documented requirement for its MCS to interoperate with Wavell. The interface will be automated.

c. Equipment. Operational.

405.2 Battlefield Artillery Target Engagement System (BATES). Bates will be the British Army's artillery command, control, and communication system.

a. Functions. BATES will provide automated data processing support for:

- Tactical and technical fire control, both conventional and nuclear.
- Ammunition and fire unit status reporting.
- Fire planning.
- Artillery target intelligence processing.
- Computation and distribution of meterological data.

b. Interfaces. BATES interfaces will include:

- Wavell.
- MLRS Fire Direction System.
- British Automated Computer-Assisted Electronic Warfare System.

A requirement exists for TACFIRE and AFATDS to exchange data with BATES. Agreed on international standards will be used for these interfaces. The interface will be automated.

c. Equipment. Bates will comprise a network of more than 800 cells deployed at all levels from forward observers and individual fire units up to division and corps artillery headquarters. The equipment will be deployed in a large number of configurations ranging in size from handheld units up to vehicular mounted centers.

BATES is projected to enter service in 1987 and 1988. It will replace the Field Artillery Computer Equipment (FACE), the Artillery Weapon Data Transmission System (AWDTS) and the processing elements of the Artillery Meterological System (AMETS).

405.3 HEROS. HEROS is the integrated C^2 information system of the Federal Republic of Germany (FRG) Army.

a. Functions. HEROS is designed to support operations and intelligence functions from corps to battalion level. The system provides computer support for maintaining friendly unit status and enemy situation data. It also provides digital communications for the distribution of text and graphics.

b. Interfaces. HEROS interfaces will include those required to provide interoperability with:

- ADLER, the FRG artillery C^2 system.
- the U.S. Army's MCS. This interface will use agreed on international standards and will be automated.

c. Equipment. Operational. Further evolutionary development of HEROS is being accomplished based on testing and experience gained with fielded systems.

405.4 ADLER. ADLER is the Federal Republic of Germany Army artillery C^2 system.

a. Functions. ADLER functions include providing capabilities for:

- Data links to function between artillery regiments and batteries.
- Battlefield surveillance.
- Acquisition, location, and identification of targets.
- Tactical and technical fire direction.
- Artillery survey computations.
- Unit and ammunition status reporting.

b. Interfaces. ADLER interfaces will include those required to provide interoperability with:

- HEROS

- The U.S. Army's TACFIRE and AFATDS using agreed on international standards. The interface will be automated.

c. Equipment. Adler will have four configurations, one for artillery regiment headquarters, one for cannon batteries, one for rocket batteries, and one for target acquisition batteries.

ADLER is being fielded during the 1986-1989 time period. It is replacing the German FALKE artillery C^2 system.

405.5 SACRA. SACRA will be a French automated information system employed at the army corps and division levels.

a. Functions. SACRA provides automation of information required for general staff functioning at the corps and division levels.

b. Interfaces. The U.S. Army has a documented requirement for its MCS to interoperate with SACRA. The interface will be automated.

c. Equipment. The projected IOC for SACRA is 1990.

405.6 ATILA. Atila is the French automated artillery C^2 system. Elements of the system support regiment, battalion and battery headquarters, liaison personnel, and observers. The battery-level system includes gun display units at the individual weapons.

a. Functions. Atila provides the capability to acquire and centrally collect information and present it for the decisionmaking process. It provides automated support for accomplishing tactical and technical fire control and for reporting fire unit and ammunition status.

b. Interfaces. TACFIRE and AFATDS interoperability requirements include a remote (level two) interface with Atila.

c. Equipment. Operational.

405.7 Odin. Odin is a Norwegian artillery computer system employed at the artillery battery and battalion levels.

a. Functions. Functions performed by Odin include:

- Technical fire control.
- Artillery survey computations.
- Computation of meteorological and weapons calibration corrections.

b. Interfaces. Interfaces include those with:

- A laser rangefinder.
- A meteorological data system.
- TACFIRE/AFATDS--remote (Level-two).

c. Equipment. Operational.

405.8 Tactical Army Command and Control Data System (TACCDAS). TACCDAS is a computer-based C^2 system of the Canadian Army.

a. Functions. TACCDAS provides automated support for command and staff elements at division and brigade levels. It provides for information analysis, display console management, and message processing.

b. Interfaces. TACCDAS will have a remote (Level-two) interface with MCS.

c. Equipment. Operational.

405.9 NATO Air Defense Ground Environment (NADGE). NADGE is an integrated air defense system for Allied Command Europe under the command and control of the Supreme Allied Commander Europe.

a. Functions. NADGE provides commanders with an integrated picture of the air situation in their respective regions and the basis on which aircraft and surface-to-air missiles can be employed against attack.

b. Interfaces. Interfaces with other air defense systems are provided by TADIL A/Link 11, TADIL J/Link 16, and NATO Link 1. The interface with the E-3A AWACS uses the Interim JTIDS Message Specifications (IJMS) message standards.

c. Equipment. NADGE includes a network of radar and control centers extending from the North Cape of Norway to Eastern Turkey. It also includes the E-3A AWACS and, to a lesser extent, integrates the individual national air defense systems such as the French STRIDA, the British UKADGE, the FRG GEADGE, the NATO Early Warning System (NAEWS), and the Spanish Combat Grande.

NADGE is Operational.

405.10 NATO Air Command and Control System (ACCS). ACCS is a NATO integrated air defense system under development to supercede NADGE. The various air defense systems, listed in paragraph 405.9, all operate independently from each other with their own dedicated sensors. Exchange of information is both limited and slow. ACCS is to be a step-by-step development and integration of existing and future systems to harmonize all present and future air command and control system of the NATO nations. It is due for completion in the year 2000.

405.11 German Air Defense Ground Environment (GEADGE). GEADGE is the FRG air weapons control system in Europe.

a. Functions. The principal objectives of GEADGE are to increase automation, improve interoperability, and to improve reliability of NATO air defense. GEADGE identifies aircraft, allocates tracks to interceptors for

engagement, resolves multiple fire unit engagements between air defense artillery brigades, and allocates unengaged penetrators and high priority tracks to the ADA brigades for engagement.

b. Interfaces

- U.S. Air Force, Marine Corps, Navy, and Army C^2 systems via TADIL B and IJMS.

- U.S. Army AN/TSQ-73 AADCP and Patriot ICC via the Missile Battery Data Link (MBDL) with possible future TADIL B interface.

- Non-U.S. units, not TADIL B capable, via the MBDL or NATO Link 1.

c. Equipment. Operational.

405.12 NATO Command, Control, and Information System (NCCIS). NCCIS will provide for the automation of all C^2 operations at all NATO command levels. It will be supported by the NATO Integrated Communications System (NICS), an automated switched communication net accessible to subscribers at all command levels including the ACCS. NICS is operational. NCCIS is in the planning stage. Information concerning NICS is included in Chapter V.

CHAPTER V
MARINE CORPS COMMUNICATION ARCHITECTURE

501 INTRODUCTION

This chapter outlines the Marine Corps communication architecture evolution from the present to the year 2001, as reflected in current Marine Corps planning. It describes the current architecture from the communicator's perspective and traces the proposed evolution over the next fifteen years. The chapter provides general information about the acquisition and the concept of employment for the equipment that will be used during this period. It should not be construed as giving specific guidance for the procurement, development, or employment of any particular item. Such guidance is normally contained in systems acquisition management documentation, developmental bulletins (DBs), and manuals.

This chapter may be used in broad planning of equipment development, in identifying problem areas associated with the introduction of equipment, and in assisting the formulation of organizational and operational concepts for future Marine Corps tactical communication requirements.

501.1 Marine Corps Communication Architecture Definition. The Marine Corps communication architecture is a subset of the Marine Corps C^2 architecture. It is an aggregate or set of communication systems and control elements, arranged in a structure or network, that provide a commander with the telecommunications required to exercise command and control of his forces. It is, at any given time, the equipment, circuits, procedures, and personnel that enable a commander to exercise command and control by means of communications.

501.2 General. System and equipment configurations and capabilities are driven by requirements. They are constrained by an array of factors that generally fall into one of two categories: physical or system generated.

Physical constraints are those levied by nature. For example, a specified frequency and bandwidth can support a determinable bit rate and no more. These kinds of constraints can only be noted and taken into account when designing a new piece of equipment.

System-generated constraints are those induced by planners, designers, and managers. They are based on known technical requirements tempered by schedule, financial, and other limiting managerial considerations. Changes in any one system must be assessed based on their impact on the overall architecture. They must be anticipated, and sufficient flexibility must be incorporated into developmental programs, to accommodate them when appropriate.

Chapter V focuses on the systems, equipment, and circuits within a node that are tailored to meet specific requirements of a Marine air-ground task force (MAGTF) and its major subordinate elements. It seeks to ease the problems of system-generated constraints by providing a general framework within which individual systems and equipment will be developed.

501.3 Organization. Chapter V is organized into several sections that discuss various aspects of the Marine Corps communication architecture. A synopsis of each section is given below:

- Section 502 deals with the technical requirements and guidelines affecting the development of new equipment.

- Section 503 categorizes equipment into basic groups and analyzes the function and purpose of each.

- Section 504 describes communication system subscribers and identifies both internal and external interfaces required.

- Section 505 describes how the communication architecture supports amphibious landings and the subsequent operations ashore. Particular emphasis is given to the impact of automated data systems (ADSs).

- Section 506 projects the Marine Corps communication architecture configuration for the 1987 to 1991 timeframe.

- Section 507 projects the Marine Corps communication architecture configuration for the 1992 to 1996 timeframe.

- Section 508 projects the Marine Corps communication architecture configuration for the 1997 to 2001 timeframe.

- Section 509 describes other Services' communication systems of interest to the Marine Corps and not discussed elsewhere in this chapter.

Sections 506 through 508 begin with a discussion of critical areas relating to each category of equipment that is immediately followed by the diagrams of selected MAGTF nodes. The equipment is categorized as subscriber facilities, switching equipment, communication control (COMMCON) systems, transmission systems, and communications security (COMSEC) equipment.

Each diagram depicts the communication equipment anticipated for that node for the period addressed. Together, the diagrams illustrate the nodal composition in three transitional stages as the communication architecture evolves over the next 15 years. The number of individual items of equipment operating at each node is not shown; only the type of equipment and its interrelationship with other equipment within the node is shown.

ADSs are represented by boxes which identify the systems fielded during a particular transitional phase. The links between the nodes are depicted in the diagrams as primarily multichannel radio; however, they may be implemented in several ways that depend on equipment availability, terrain, and the tactical situation.

502 GUIDELINES AND TECHNICAL REQUIREMENTS

502.1 Guidelines

502.1.1 Mobility. Traditionally, single-channel radio has been the principal means of communication support in the assault. Offensive operations are characterized by fast-moving, dynamic, fluid situations. Time and momentum are critical. The tactical commander cannot do without communications, yet he must ensure that his lines of communication do not become burdensome, presenting him with more constraints. Mobility of communication equipment and systems will remain a crucial requirement.

Multichannel radio and wire have been the principal means of communication support in the defense. The criticality of time and momentum lessen. Emphasis is placed on selecting and fortifying terrain that offers protection and mutually supportive fields of fire. Movement is minimized until the counterstroke is executed, and the unit takes the offensive. Wire and multichannel links take longer to establish, yet they offer reliability and greater throughput.

ADSs rely on uninterrupted wire and multichannel links to render their full potential. However, in fluid situations, fast moving units will continue to be dependent primarily on single-channel radio.

502.1.2 Transition from Analog to Digital Systems. Until very recently, information has been transmitted by means of analog signals. The literal explosion of technological achievement in the semiconductor industry has ushered in an era of automated systems whose sophisticated techniques have been put to use by the military in the development of technical data systems (TDSs).

The introduction of ADSs allows for the efficient processing and use of great quantities of data. ADSs achieve this capability through the use of digital techniques. In order to benefit from advantages offered by automated systems, the Joint Tactical Command, Control and Communications (C^3) Architecture being developed by the Joint Tactical Command, Control, and Communication Agency (JTC^3A) and the Navy Command, Control, and Communications Architecture (NC^3A) are converting to all-digital communications systems. Marine Corps communications must evolve from systems primarily analog in nature to digital ones to keep pace with these C^3 developments within the Department of Defense (DoD).

502.1.2.1 The Advantages of Digital Systems. The advantages of an all-digital system significantly outweigh its disadvantages. In digital systems, all information is exchanged in a binary format, i.e., a series of ones and zeros, or ons and offs. To the equipment, the physical nature of the signal is essentially the same. Thus, the system can receive, process, and manipulate the signal with relative ease.

The fundamental criteria for all communication systems are reliability, security, flexibility, and speed. One can compare digital systems against these criteria to see clearly their advantages.

a. Reliability. Digital systems provide for better reliability due to their ability to resist line noise, cross-talk, and attenuation; restore easily a digital signal to its original quality with simple integrated circuits; detect errors in transmission and automatically correct them; and perform self-diagnosis for system fault finding.

b. Security. Cryptographic systems are mathematically based in combinatorial problems. The binary signal is simply the physical representation of the binary number system. Therefore, encryption in digital systems is based on the subjection of the binary signal to mathematical formulas. End-to-end, multilevel encryption is accomplished by providing a digital processor COMSEC device at the subscriber terminal end with other equipment in the circuit path.

Transmission security can be enhanced by employing burst transmission techniques. In burst transmission, the message is buffered and compressed and then sent within a short interval of time. The distant station receives the compressed signal, buffers it, and expands it to recapture the information. The transmission burst of radiation is extremely short, reducing the time that a direction finder will have to lock onto the signal.

c. Flexibility. Digital systems offer a tremendous amount of flexibility. This is largely because the information is contained in binary numbers rather than in the signal characteristics. Using numbers, the system can store, manipulate, and forward information at will. This capability means that the information is in the format required by a computer and can be manipulated by software.

d. Speed. Information is conveyed in the binary signal by a change in state. The speed of the system is largely dependent on the speed at which the switching device operates. Modern switches operate in nanoseconds (billionths of a second). The new generation of switches will operate even faster.

502.1.2.2 Disadvantages of Digital Systems. The disadvantages lie in increased bandwidth requirements, system coordination requirements, and cost.

a. Increased Bandwidth. As the capability for information exchange increases, so does the desire to obtain more information. There is a trade-off that nature imposes for the tremendous advantages offered by digital systems. Higher information transfer rates require larger bandwidths. The electromagnetic spectrum, like any other natural resource, has limits. The spectrum is already crowded to a high degree. Systems that consume more of it are not really welcome. The higher frequency regions of the spectrum offer the necessary bandwidths. However, they are limited to techniques such as line-of-sight, troposcatter, and meteor burst propagation that are increasingly complex and expensive to engineer.

b. System Coordination. Coordination of analog systems depends primarily on ensuring that signals are compatible. Digital systems add another level of complexity. They must not only have compatible signal

characteristics, they must recognize controlling information contained in the message content. Protocol formats, handshaking routines, headers, and trailers all must agree if two systems are to communicate.

c. Vulnerability. Complex switched digital systems depend on continuous connectivity and to a very great extent on software-controlled sending, receiving, switching, encrypting, decrypting, displaying, and recording. When such systems receive battle damage, or when they must be reconfigured because of tactical maneuver, the rapid restoration of full-system service may be impossible. With damage to analog systems, operators are the computers and can relay, switch, and interpret garbles.

d. Cost. Digital systems are very complex; both in terms of their hardware requirements and their software. This increased complexity directly impacts on the cost of the system.

502.1.3 System Interoperability. The Marine Corps communication system supports the command and control (C^2) requirements of commanders by providing internal and external communications required for interoperability between operational facilities (OPFACS), communication centers, and individual subscribers. Interfaces between OPFACs and ADSs can be described using the military version of the International Organization for Standardization (ISO) Model. The sets of procedures, processes, and rules controlling Marine Corps systems interfaces are contained in Volume V, Protocol Standard of the Marine Corps Technical Interface Design Plan (TIDP) for Marine Tactical Systems. Interoperability guidance is provided by the Marine Corps Tactical Systems Interoperability and Intraoperability Program (TACSIIP) and Joint Services Programs. A summary of these programs is contained in chapter II. Detailed information is contained in the Marine Corps Interoperability Management Plan (IMP).

502.1.4 Communications Security. Based on Department of Defense Policy, a communication system goal is to achieve end-to-end security for 100 percent of its subscribers. COMSEC includes physical security of COMSEC materials and information, emission security, transmission security, and cryptographic security. Each of these types of security must be provided for, as appropriate, throughout communication equipment and systems, and ADSs.

502.1.4.1 Physical Security. Physical security is provided by physical measures used to safeguard classified equipment, material, and documents from access to, or observation by, unauthorized persons.

502.1.4.2 Emission Security. The objective of emission security is to deny unauthorized persons information that might be derived by the interception and analysis of compromising emanations from cryptographic equipment and telecommunications systems. Emission security is achieved by application of prescribed engineering practices during system design, development, fabrication, and installation. Technical inspections with sensitive analyzing equipment are routinely made of communications and information processing installations to ensure that emission security objectives are being met.

502.1.4.3 Transmission Security. The objective of transmission security is to protect transmission from interception and exploitation by traffic analysis, imitative deception, and direction finding. In addition to emission control (EMCON) and other communication discipline practices, transmission security can be provided, in part, as an inherent part of the radio or transmission system. There are several low probability of intercept (LPI) techniques available and more currently being developed. These techniques currently include spread-spectrum transmission, low-data-rate digitized voice, and burst-transmission techniques.

a. Spread-Spectrum. Spread-Spectrum transmission is a communication technique in which the modulated information is transmitted in a bandwidth considerably greater than the frequency content of the original information. It affords advantages in interference avoidance. Pseudo-noise or direct-sequence spreading transmission is used to reduce vulnerability by modulating the message over a wide frequency band, making it difficult to differentiate from noise. Frequency hopping also uses spread-spectrum transmission; but by rapid, pseudo-random jumps in transmission frequency, the signal energy is spread throughout the bandwidth.

b. Low-Data-Rate. This technique involves automatically repeating the message several times, using majority-vote techniques for verifying the correct characters and eliminating errors.

c. Burst Transmission. Used in devices like the Digital Communications Terminal (DCT), burst transmission greatly reduces the required transmission time, and thus the vulnerability to enemy electronic warfare (EW) attack and exploitation. Burst transmission requires a wide frequency bandwidth thereby reducing the number of possible channels within a given portion of the frequency spectrum.

502.1.4.4 Cryptographic Security. Cryptographic security is concerned with providing technically-sound cryptographic systems, and proper use of authorized codes, cipher devices, and machines employed for encrypting/decrypting transmitted information. COMSEC equipment will use any of three general techniques with a communication system. Each of these techniques is discussed below using application to a tactical radio net as examples.

a. Integrated COMSEC. In the integrated COMSEC technique, the COMSEC function is collocated with the radio function, sharing a common package. This is accomplished either by combining the radio and COMSEC circuitry or by providing physical space in the radio equipment package for a COMSEC module. An example of the application of this technique is TSEC/KY-67 BANCROFT.

b. Applique COMSEC. The semi-integrated COMSEC or "TOPHAT" technique provides the COMSEC function in a component that is physically attached to the radio. In operation, the radio and COMSEC components are used as a single unit, generally sharing a common power supply. An example of the application of this technique is the TSEC/KYV-2 module used with the AN/PRC-68.

c. Separate COMSEC. For this technique, the COMSEC and radio functions are separate entities or components. An example of the application of this technique is the use of the TSEC/KY-57 with the AN/PRC-77.

502.1.5 Graceful Degradation. The communication system must allow for degraded modes of operation in which loss of switches and interswitch links can be accommodated with minimum disruption to network traffic handling.

502.1.6 Developmental Guidelines. The Marine Corps Communication System will take full advantage of suitable equipment developed by the other Services and off-the-shelf equipment. This includes equipment formerly being developed as TRI-TAC Programs and that are now managed by the lead Services. The Marine Corps participates in the development programs of the other Services to ensure interoperability and to eliminate parallel development of similar equipment.

502.2 Technical Requirements. The following technical requirements will be met by communication systems and equipment for the purpose of standardization and interoperability.

502.2.1 Data Transfer. The transition from analog to digital communications and the increased use of automated C^2 systems requires the rigerous implementation of interoperability standards in order to achieve effective data transfer. Additional details concerning interoperability programs are contained in section 202. Interoperability standards are generally categorized as message, protocol, and data standards.

a. Message Standards. Message standards are message formats, formatting rules and conventions, and acknowledgment instructions. They are supported by data standards. Message standards are specified in Marine Corps, other Service, and joint technical interface design plans (TIDPs), Joint Chiefs of Staff (JCS) publications, and various North Atlantic Treaty Organization (NATO) standardization agreements (STANAGs).

b. Protocol Standards. Protocols establish the procedural rules that allow TDSs and interconnecting equipment to exchange information. They provide conventions for establishing physical transmission paths, activation and control of data links, recovery from errors, procedures for interchange of information between networks, and rules for interfaces with data communication networks. Protocol standards are those conventions and procedures that are applied to the design and development of TDSs and interconnecting equipment to ensure their interoperability. Protocol standards are documented in Defense and Military Standards (DoD/MIL-STDs), the Technical Interface Design Plan for Marine Tactical Systems (TIDP), Tri-Service Tactical Communications (TRI-TAC) performance specifications, and, for Marine Corps-unique equipment, functional or product specifications prepared in accordance with MIL-STD-490A.

c. Data Standards. Data standards provide a dictionary of common data items and prescribe the manner in which these items of data are represented when specified in message and protocol standards. Data standards are contained in NATO Allied Data Publications (ADatPs), message element dictionaries (MEDs), and interface specifications.

502.2.2 Record Message Traffic. For record message traffic, the communication system will accept data and teletypewriter signals in the 8-bit American Standard Code for Information Interchange (ASCII) format. Systems will be capable of accepting and handling binary data in a transparent mode for exchanges requiring unique or uncodified data formats. This transparent mode will permit any combination of binary digits to be transmitted in any portion of a message (excluding protocol fields) without restriction.

502.2.3 Tactical Digital Information Links (TADILs). Table 5-1 lists various TADILs currently being used and gives a summary of the characteristics of each. TADILs A, B, C, and J are managed by the JTC^3A for the Configuration Management Subgroup of the Theater and Tactical Command, Control, and Communications Panel (T^2C^3P) of the JCS. These TADILs are collectively referred to as JTAO standards or program. Link 1 is a NATO standard with no U.S. equivalent. Figures 3-9 through 3-12 depict the links provided by the various TADILs.

502.2.4 Channel Rate. The digital transmission system channel-rate will be 16 or 32 kilobits per second (kbps) to accommodate the 16 kbps continuously variable slope delta (CVSD) voice-digitizing technique scheduled for the interim timeframe. High frequency (HF) radios will use a 2.4 kbps data rate.

502.2.5 Power Sources. All major equipment shall be operable with 50/60 Hertz (Hz) power sources. Certain equipment will also be operable with external or internal direct current (DC) sources. The ultimate goal is to eliminate the need for 400-Hz generators.

502.2.6 Radio Concept. The Marine Corps Communication Architecture net radio concept for single-channel HF radios is based on 3 kilo-Hertz (kHz) channel spacing. Very high frequency (VHF) and ultra high frequency (UHF) radios will be based on 25-kHz channel spacing. New single-channel radios will be compatible with existing single-channel radios.

Table 5-1. Selected Command & Control Tactical Digital Information Links

U.S.: NATO	TADIL A LINK 11	TADIL B N/A	N/A LINK 1	TADIL C LINK 4A	TADIL J LINK 16	ATDL-1 N/A
FUNCTION	Combat info	Air defense	Air defense	Ftr control	Multiple: CNI	Air defense
INFORMATION	Track info mgt data, C^2 info, status data	Track info mgt data, C^2 info, status data	Track info mgt data, C^2 info, status data	Command info, target info, advisory info, fighter status*, ACLS, CAINS	All of preceding nets w/ greater detatil, plus: voice, relative Psn/Nav, cooperative ID.	Track info mgt C^2 info, status data
MESSAGES	JCS PUB 10 M-series	JCS PUB 10 M-series	JCS PUB 10 S-series	JCS PUB 10 V- & R-series	JCS PUB 10 J-series when approved	B-series
TRANSMISSION	UHF, HF	Land-line, etc.	Land-line	UHF	D-Band (960-1215 MHz)	UHF
USERS						
- AF	E-3A, MPC (for I/O w/ TACS)	TACS (MPC, CRC/CRP), ASIT (for I/O w/ E-3A)	MPC (for TACS-NADGE I/O) -TDDL subset for F-106 & F-101	E-3A (to control Navy/MC ftrs)	E-3A, ASIT (post-IJMS)# Potentially fighters	No
- Navy	NTDS, ATDS	—	—	NTDS, ATDS (incl. ftrs)	NTDS, ATDS (incl. fighters)	—
- Marines	TACC, TAOC	TACC, TAOC	TACC, TAOC	TAOC, fighters	C^2, fighters **	TAOC, HAWK
- Army	—	TSQ-73 at group (for I/O w/ AF)	Interim for Allied static war hqtrs	—	Air Defense Artillery Systems	TSQ-73, HAWK, Patriot
- NATO	Maritime only	—	NADGE	(No applic'ns)	NATO AEW&C, NAEGIS (post-IJMS)#, possibly ACCS, national fighters	—
ARCHITECTURE	Star net: discrete Tx, full Rx connectivity	Point-to-point: discrete Tx/Rx	Point-to-point: discrete Tx/Rx	Multipoint bdcst discrete address Tx/Rx	Full net connectivity possible	Point-to-point: Full duplex
	Half-duplex	Full duplex	Full duplex	*Half-dup (2-way) Simplex (1-way)	Half-duplex	FSK, LOS
PARTICIPANTS						
- Normal	Up to 20	2 or more (can be multi-point)	2 or more (can be multi-point)	1 C^2 to 4 A/C	2-2000	2
CAPACITY (BPS)	2240/1364	1200/600	1200/600 (412L; 1500/750)	5.0 K to 10.0 K *	60 K (TDMA)	600/1200/2400
SECURE	Yes	Yes	Yes	No	Yes	Yes
A/J	No	(N/A)	(N/A)	No	Yes. Spread-spectrum, freq. hopping, pulse-coding	No
BUFFERS						
-MPC	Yes	Yes	Yes	No	(Via ASIT, post-IJMS)	No
- TAOC	Yes	Yes	Yes	Yes	Potential	No
- ASIT	Potential	Yes	Possible	No	Potential	No
DOCUMENTATION:						
- U.S.	MIL-STD 188-203-1	MIL-STD 188-203-2	—	MIL-STD 188-203-3 OS-404.1	MIL-STD 188-203-4 (Proposed)	MICOM TIDP for ATDL-1, Nov 84
- NATO	STANAG 5511	—	STANAG 5501	STANAG 5504	STANAG 5516	—
DESCRIPTION	Star-netted, half-duplex link to exchange combat information between NTDS, ATDS, E-3A, TACC, TAOC. (HF, UHF)	Ground point-to-point, full- duplex link to exchange air defense information within and between AFTACS. (Land-line, microwave, etc.)	Ground point-to-point, full-duplex link to exchange air defense information within the NADGE. (Land-line)	Point-to-point simplex/half-duplex link for NTDS, ATDS, E-3A, TAOC control of fighters. (UHF)	Time-division multiple-access, netted link to distribute information. Will be message standard for JTIDS. (D-Band, line of sight)	Point-to-point full duplex link

* For 2-way TADIL-C
#IJMS - Interim JTIDS Message Standards
** Other Service Fighters

503. ARCHITECTURE DESCRIPTION

503.1 Equipment Categories. Within the Marine Corps Communication Architecture, all communication equipment has been grouped into one of the following categories:

- Subscriber Facilities.
- Switching Facilities.
- Communication Control Facilities.
- Transmission Systems.
- COMSEC Equipment.

Communication functions may be performed within more than one category. In addition, COMSEC equipment is used in all of the categories. This section assigns typical functions to each of the equipment categories and will serve as the initial guideline for TDS requirements for interfaces within the communication architecture. Table 5-2 lists functions that may be performed by each equipment category. A technical description of communication equipment is contained in the current edition of Marine Corps Technical Manual TM-2000-15/2. Appendix D of this document also gives a brief description of communication equipment.

503.1.1 Subscriber Facilities. Subscriber facilities provide the users with access to the communication system by telephone, teletype, remote radio device, or data terminal equipment.

503.1.1.1 Functions Performed. Subscriber equipment may perform the following functions:

a. Analog-to-Digital (A-D) and Digital-to-Analog (D-A) Conversion. During the transition to the all-digital environment, conversion may be performed by all categories of equipment. In the all-digital environment, conversion will be performed primarily at the subscriber facilities.

b. Buffering. The subscriber facilities may perform temporary message storage for use during the period of message processing.

c. Input/Output. Input/output (I/O) devices are used to introduce data into, or extract data from, a communication system.

d. Line Protocol. Hardware and software line protocol procedures are used to transfer cryptographic, voice, and control information between subscriber terminals and a switch. Line protocol procedures include synchronization, signaling, supervision, message transmission, and error detection and correction.

e. Loop Encryption. The goal of end-to-end security requires an integral encryption capability at each subscriber terminal or approved loop to the COMSEC device. To reduce cost and logistical requirements, COMSEC assets

Table 5-2. Communication Equipment Functions

	SUBSCRIBER FACILITIES	SWITCHING FACILITIES	COMMUNICATION CONTROL FACILITIES	TRANSMISSION SYSTEMS
A-D Conversion	●	●	●	●
Accounting		●		
BIT Conditioning				●
Buffering	●	●		
Bulk Encryption			●	
Circuit Reassignment			●	
Circuit Switching		●		
Input/Output	●	●	●	●
Line Conditioning			●	
Line Protocol	●	●		
Loop Encryption	●			
Loop/Trunk Encryption		●		
Message Accountability	●			
Message Retrieval/ Storage	●			
Message Switching		●		
Monitor/Test			●	
Multiplexing		●	●	
Net Radio Data Interface*			●	
Parallel/Serial Bit Conversion	●			
Patching & Restoral			●	
Reception				●
RF Modulation/Demodulation				●
Text/Header Generation	●			
Timing & Synchronization				●
Transmission				●
Transmission Security				●

*Net Radio Data Interface Includes:

Buffering
Data Rate Conversion
DCT Message Interface
Protocol Conversion
Single Channel Radio Interface (Modem)

may be shared in those instances where it is operationally and technically feasible.

f. Message Accountability. The communication system will provide message accountability within the store-and-forward network. This will be accomplished using system protocol acknowledgments between facilities.

g. Message Retrieval and Storage. A requirement to retrieve a message beyond the file-keeping period will generate a need for a storage medium and a retrieval capability.

h. Parallel/Serial Bit Conversion. All voice and data traffic passed within the communication system will be in serial bit-stream form. Many subscriber data terminals will handle groups of bits in parallel; therefore, any conversion process will be provided by the data terminals.

i. Text/Header Generation. The subscriber facility will generate a complete message, in proper format, conforming to the established system protocol described in Allied Communications Publication (ACP) 126 or Joint Army, Navy, Air Force Publication (JANAP) 118.

503.1.1.2 Current Equipment. The following types of subscriber equipment are currently in use:

- Facsimile.
- Telephone.
- Teletypewriter.
- Teletypewriter Central.
- Automatic Digital Network (AUTODIN) Central.
- Radar Air Traffic Control (ATC) Terminal.

503.1.2 Switching Facilities. Switching facilities are the system elements that, through transmission systems, interconnect subscribers. They employ both circuit and message switching techniques. The ability to connect switching facilities through trunks provides the flexibility for a broad-based common user system. Switching facilities can exercise limited technical control of circuits accessing them.

503.1.2.1 Functions Performed. Switching facilities may perform the following functions:

a. A-D Conversion. Digital circuit switches will perform A-D conversion, as required, on analog loops and trunks during the transition from the present analog environment to the all-digital environment. This includes A-D conversion for voice-subscriber input.

b. Accounting. An accounting for the status of a message will be maintained by each switching facility that processes it. Circuit switch accounting relates to connectivity only.

c. Buffering. The switching facility will provide temporary message storage during the message processing.

d. Circuit Switching. A path is set up between the circuits to be connected. General subscriber service management is provided.

e. Line Protocol. Hardware and software line protocols include loop and trunk procedures used to transfer control information between subscriber terminals and the switch, and between switches. Line protocols include signaling, supervision, synchronization, message transmission, and error detection and correction.

f. Loop/Trunk Encryption. Loop encryption will be provided on a pooled or dedicated basis, as required. Trunk encryption will be provided by bulk encryption techniques.

g. Message Switching. This function includes receiving a message, storing it until the proper outgoing lines are available, and then retransmitting it. A message switch can output to multiple lines. Message switching is not applicable to voice transmissions.

h. Multiplexing. There are two types of multiplexing, frequency division multiplexing and time division multiplexing. Frequency division multiplexing is the division of one common physical channel into two or more parallel functional channels by splitting of the frequency band transmitted by the common channel into narrower bands, each of which is used to constitute a distinct, functional channel. Time division multiplexing is the allocation of a common physical channel to multiple users, each of which transmits in turn, to constitute multiple serial functional channels. Multiplexing may be accomplished by the unit level circuit switches or by special multiplexers.

503.1.2.2 Current Equipment. The following types of switching equipment are currently in use:

- Automatic Telephone Central Office.
- Manual Telephone Switchboard.
- Manual Cordless Switchboard.
- Automatic Telephone Switchboard.
- Communication Patching Panel.
- Communication Technical Control Center.

503.1.3 Communication Control (COMMCON) Facilities. COMMCON is the organizing, directing, controlling, coordinating, planning, and evaluating of communication resources to accomplish assigned missions and tasks. The responsibility for COMMCON rests with the communication-electronics officer/

communication officer (CEO/CommO). At higher echelons the COMMCON process is much more defined than at lower echelons; however, COMMCON is applicable to all echelons of command. The two major functional areas within COMMCON are system control (SYSCON) and technical control (TECHCON). SYSCON includes planning, engineering, coordinating, and controlling a communication system. TECHCON involves implementing, monitoring, and restoring of communications systems.

503.1.3.1 Functions Performed. Communication control facilities (CCFs) may perform the following functions:

a. Analog-to-Digital Conversion. The CCF will provide A-D conversion for direct-access analog circuits in the near term. As digital telephones are fielded, the requirement for analog access to switching facilities will be reduced and eventually eliminated.

b. Bulk Encryption. Bulk encryption will be provided for digital channels and channel groups where trunk encryption is not provided by a trunk encryption device (TED) located at the switch.

c. Circuit Reassignment. This refers to the ability to process digital groups so that bit positions occupied by specific channels (or sets of channels) in the incoming data stream will occupy specific bit positions in outgoing data streams, as determined by the operator. This allows the reassignment of individual channels to specific transmission paths.

d. Line Conditioning. This is accomplished through the use of amplifiers and repeaters, compensating for degradation of signals caused by transmission anomalies or electrical phenomena.

e. Monitor/Test. All circuits passing through the CCF may be monitored and tested for signal quality (to include bit error rate).

f. Multiplexing. Multiplexing is described in paragraph 503.A.2.

g. Net Radio Interface. The following functions are required for interfacing tactical net radio with the multichannel radio trunks.

(1) Buffering. The net radio interface provides temporary message storage during processing.

(2) Data Rate Conversion. Data rate conversion is provided for subscribers whose netted radio link rates may be considerably slower than the data rates used on multichannel links; e.g., 600 bps versus 16 kbps.

(3) Error Detection and Correction. Error detection and correction will be accomplished for all traffic on both the multichannel radio and the net radio sides of the CCF.

(4) Modulation Conversion. The net radio interface (NRI) provides for the conversion of modulation techniques required for interoperability of net radio with multichannel radio.

h. Patching and Restoral. This function provides for initializing and restoring a circuit path by connecting a subscriber to an available operational channel at a matrix where circuits are available.

503.1.3.2 Current Equipment. The current CCF equipment consists of the Communications Technical Control Center AN/TSQ-84 which serves as the main distribution frame (MDF) and provides the facilities for circuit monitoring, testing, patching, restoring, and line conditioning. The other functions mentioned in paragraph 503.1.3.1 above are accomplished outside of the CCF environment, or not at all. Other elements of the present COMMCON responsibility, particularly those that are management oriented, are accomplished by manual means. The existing CCF capabilities are, in general, adequate for the needs of the present analog communication systems.

503.1.3.3 Future COMMCON Requirements. The communication system is in transition from analog to digital technology. Digital technology will have a significant impact on the manner in which COMMCON is accomplished. There will be a requirement to provide automated support for many of the traditionally manual management aspects of COMMCON. The existing CCF family of equipment must evolve into one compatible with digital technology and with the hybrid analog and digital requirements that will exist during the period of transition. For several reasons, the family of CCF equipment developed under the TRI-TAC Program does not fully meet Marine Corps requirements. These reasons include size, weight, cost, and operational capabilities. The Marine Corps Tactical Communication Control Facility Program is concerned with developing operational requirements and procedures, employment concepts, and equipment to support Marine Corps COMMCON in the digital and hybrid analog/digital environments. The requirements analysis deals with TECHCON and SYSCON hardware needs. The circuit switches, AN/TTC-42 and SB-3865, will assume many of the functions mentioned in 503.1 such as circuit reassignment, bulk encryption, multiplexing, and A-D conversion. However, the requirement for an MDF remains.

503.1.4 Transmission Systems. Transmission systems are the last stage through which the signal passes prior to leaving a node. Transmission systems may be complex, sophisticated systems, or simple wire circuits.

503.1.4.1 Functions Performed. Transmission systems may perform the following functions:

a. A-D Conversion. Larger, more complex systems may accept baseband digital signals as an input. However, for systems such as a single- channel radio, the input is analog and must be converted within the radio and cryptographic circuitry prior to transmission.

b. Bit Conditioning. Bit conditioning encompasses the activity required to reconstitute or restore a binary signal to its original shape to rid the signal of interference and noise. In radio systems, the signal is conditioned

by filters and amplifiers at several stages before it is sent to the output stage. In cable, the signal is restored by the use of repeaters, interspersed along the cable link.

c. Modulation/Demodulation. Modulation is the process whereby certain characteristics of a signal, often called the carrier, are varied by a second input signal which contains the information to be sent. Several types of modulation techniques exist for both analog and digital systems. Demodulation is the process by which the information is recaptured from the modulated signal.

d. Timing and Synchronization. Timing and synchronization of signals must take place before digital devices can exchange data. The software procedures that accomplish this are called "handshaking routines." In transmission systems, timing and synchronization requirements are more stringent since the long distances between systems increase the probability that timing and synchronization information may be lost or distorted.

e. Transmission. Radio transmission systems propagate electromagnetic energy into the ether. Cable systems send out signals over fiber optic or wire cables.

f. Transmission Security. Transmission security is described in paragraph 502.1.4.

503.1.4.2 Current Equipment. The following types of transmission systems are currently in use:

- Multichannel Radio, both terrestrial and satellite.
- Single-Channel Radio, both terrestrial and satellite.
- Wire.
- Fiber Optic Cable.

a. Multichannel Radio. This equipment consists of multiplexers, modems, and radio sets that permit multiple users simultaneous access to a single transmission path. Current efforts will replace existing equipment with line-of-sight (LOS) and troposcatter systems. Multichannel systems will become the primary transmission means at higher echelons in the mid-range period. The advantages and disadvantages of multichannel radio are described in the following paragraphs.

(1) Advantages

(a) Speed of installation. A multichannel radio link can be installed in essentially the same amount of time necessary to set up a single-channel link. Critical siting of multichannel radio terminals is required, however, because directional antennas are generally required.

(b) Flexibility. A switched multichannel radio system, when combined with switching nodes and with all normal commands connected into the system by telephone, data terminal, facsimile equipment, or single channel radio extension, provides a thoroughly flexible communications network. The switched multichannel system provides the capability to allow direct, personal voice contact between commanders and staff officers literally anywhere in the theatre of operations.

(c) Trunking. Multichannel radio systems permit trunking of individual communication channels between nodes. Trunking makes it possible to treat numerous individual channels as a single link.

(d) Terrain ownership. Multichannel radio links do not require control of the terrain between terminals since there are no physical links that must be safeguarded and maintained.

(2) Disadvantages

(a) Susceptibility to countermeasures. Multichannel radio, as with any radio, is subject to enemy intercept and jamming. Danger of physical destruction based on radio-location is heightened because multichannel radio terminals normally remain stationary and transmit continuously while in operation.

(b) Range. Terrestrial multichannel radio systems are limited in their range. Range limitations are functions of available radio frequencies, transmitting power and antenna gain required, availability of operating sites and, in some cases, the height of intervening terrain. Multichannel systems for use at extended ranges require larger and more sophisticated equipment.

(c) Efficiency. Switched multichannel systems are by nature more sophisticated and complex than single-channel systems. Frequent and unscheduled moves or destruction of portions of the system will drastically reduce their efficiency. Thus, a complex which must remain stationary and be reasonably safe from enemy destruction, may be efficiently served by a switched multichannel radio system, but ground combat units which are more mobile in contact may not.

b. Single-Channel Radio. This equipment supports voice or record communications. Single-channel radios will remain the primary means of communications at the battalion and squadron level. Current efforts are directed toward product improvement, size reduction, digital transmission, integrated COMSEC, modular construction, and equipment standardization. The advantages and disadvantages of single-channel radio are described in the following paragraphs.

(1) Advantages

(a) Speed of installation. Single-channel radios can be installed quickly. They do not require interconnection with other major devices in order to provide service.

(b) Flexibility. Single channel radio nets can be restructured rapidly and can be operated with all net members on the move. In a switched multichannel radio system like the Mobile Subscriber Equipment (MSE), a user may be connected into the system by single channel radio while on the move, but the backbone system itself is far less mobile. In a single-channel radio system, the entire net; i.e., the backbone system and all users; may be continuously mobile.

(c) Bandwidth. Single-channel radios require less channel bandwidth than is required for trunking multichannel links.

(d) Ranges. Single-channel radios operate in the MF, HF, VHF, and the lower UHF portion of the radio frequency spectrum. Through proper frequency allocation, planning, and assignment, single-channel systems can be used to span almost any distance.

(2) Disadvantages

(a) Susceptibility to countermeasures. All radio systems are subject to enemy interception and jamming. Locating single-channel radio stations can be difficult if the single-channel radios are constantly moving. However, single-channel radios can provide the enemy with more useful intelligence because they are used by tactical units. Operator errors, traffic analysis, net structure, and operator and equipment "fingerprinting" provide greater opportunities for exploitation.

(b) Efficiency. Single-channel radio nets functioning in the voice mode are notoriously inefficient when manned by operators unfamiliar with military terminology or who have difficulty spelling, reading, or speaking. These nets, when operated by the commanders and staff officers they are intended to serve, or operated by seasoned, experienced men, can be used to send and receive voice messages more efficiently.

c. Satellite Systems. Satellite systems may be either multichannel or single-channel. The Fleet Satellite Communications (FLTSATCOM) Program and the Ground Mobile Forces (GMF) Satellite Communications Program will provide the landing forces access to satellite communications channels for both internal and external interfaces. FLTSATCOM will provide primarily communications external to the landing force, while GMF satellite communications will be used to link the Marine amphibious force (MAF), division, wing, and force service support group (FSSG). Because of their relatively recent application to Marine Corps communications and the important roles they are being used to fill, the advantages and disadvantages of satellite communication systems are described in the following paragraphs.

(1) Advantages

(a) Range. Depending on the height and orbit of the satellite, two terminals separated by a third of the earth's circumference can communicate using one satellite. Fidelity is excellent and reliability is very good. Operational characteristics are being improved in successive

generations of satellites through onboard processing, frequency selection, satellite signal-tracking, and increased output power.

(b) Bandwidth. Satellite systems currently operate in the UHF and super high frequency (SHF) frequency bands. Future systems will include an extremely high frequency (EHF) capability. These frequency bands can accommodate channels characterized by wide bandwidths, which provide greater throughput and better fidelity.

(c) Mobility. Most satellite terminals are housed in shelters and transported by trucks, with towed generator and antenna stowage trailers. Once in position, the terminal can be operational within a few hours. Siting does not require the large, cleared areas needed for troopscatter or HF radio facilities. Depending on the position of the satellite and the terminal, satellite systems allow greater independence from the topography of the region.

(2) Disadvantages

(a) Jamming. Satellites pose easy targets for jamming. To reduce this vulnerability they are being designed to exploit antijamming techniques such as:

- Spread spectrum signals.
- Onboard signal processing.
- Controlled beam footprints.
- Selective nulling-out of jammers.

(b) Channel Availability. Satellites have only a limited number of channels available, but many potential users. Strategic requirements normally take priority over tactical requirements.

(c) SYSCON/TECHCON Requirements. Satellites pose requirements for increased SYSCON and TECHCON. A failed satellite cannot be easily repaired or replaced.

(d) Physical Vulnerability. Satellites are physically vulnerable to antisatellite weapons such as killer satellites.

503.1.4.3 High Frequency Spectrum Management Systems. The Tactical Frequency Management System, AN/TRQ-35(V) and the Program for a High Frequency Radio Propagation Assessment/Propagation Forecasting System (PROPHET) are used by frequency coordinators and HF communication planners at the major commands of a MAF. Summaries of the characteristics and capabilities of the AN/TRQ-35(V) and PROPHET are contained in appendix D.

503.1.5 Communications Security (COMSEC) Equipment. COMSEC guidelines and functions are discussed in paragraph 502.1.4. Families of COMSEC equipment, systems in use, and systems being developed are discussed in subsequent paragraphs below.

503.1.5.1 Families of COMSEC Equipment

a. SAVILLE. The SAVILLE family of equipment shares a common cryptographic system and includes certain TENLEY and SEELEY equipment, VINSON, and BANCROFT.

b. TENLEY and SEELEY. TENLEY is the name given to the initial development program for a family of COMSEC equipment used in testing of automatic switching and technical control equipment. A new program designator, SEELEY, has been assigned to programs designed to upgrade certain TENLEY equipment, such as the TSEC/KG-82 and the TSEC/KY-68.

c. SELDON. SELDON is the name given to the development or modifications of COMSEC equipment for TRI-TAC programs such as the net radio interface device and the Unit Level Message Switch (ULMS). The SELDON family will consist of a common interoperable set of equipment that will provide loop and trunk security.

d. NESTOR, TSEC/KY-8/28/38. NESTOR is a family of pulse-code-modulation (PCM) voice security equipment presently fielded and currently being replaced by VINSON. NESTOR is not compatible with equipment using SAVILLE logic.

503.1.5.2 Current Equipment. The following COMSEC equipment is currently in use:

a. VINSON, TSEC/KY-57/58. VINSON is an separate unit used for securing wideband digital voice and data.

b. ORESTES, TSEC/KW-7. ORESTES is used for securing teletypewriter traffic and will be replaced by TSEC/KG-84A in 1986 and TSEC/KG-84-C in 1988.

c. Secure Voice Module (SVM), TSEC/KYV-2A. This SVM uses SAVILLE logic with the AN/PRC-68 radio.

d. VALLOR, TSEC/KW-46. VALLOR is used for fleet broadcast coverage.

e. PARKHILL, TSEC/KY-65/75. PARKHILL is used for securing narrowband analog voice transmissions.

f. BANCROFT, TSEC/KY-67A. BANCROFT is an integrated COMSEC development that provides radio and VINSON COMSEC functions in a common package.

503.1.5.3 Systems being Developed. The following COMSEC equipment is under development:

a. Digital Subscriber Voice Terminal (DSVT), TSEC/KY-68. The DSVT will provide voice and data access to the circuit switches.

b. Dedicated Loop Encryption Device (DLED), TSEC/KG-84A and TSEC/KG-84C. The DLED will be used for point-to-point and netted data operation, as well as message switch access.

c. Loop Key Generator (LKG), TSEC/KG-82. The LKG is used to provide the switches with a COMSEC intercommunications capability for loops with the DSVT and DLED.

d. Trunk Encryption Device (TED), TSEC/KG-81 and SEELEY Trunk Encryption Device (STED), TSEC/KG-94 and 94A. The TED and the STED will be used for bulk trunk encryption.

e. KEESEE. These are key generator hybrids that will be used for integrated systems where site, cost, and battery-power are prime considerations.

f. VACTOR, TSEC/KYV-5. VACTOR is a future development for secure, digital voice communications over narrowband channels.

g. Secure Digital Net Radio Interface Unit (SDNRIU), TSEC/KY-90. The SDNRIU will provide a secure interface between single-channel radio subscribers and the digital switching system.

504 COMMUNICATION SYSTEM SUBSCRIBERS

504.1 General. The communication system is a network connecting the nodes and OPFACs of a C^2 system. It provides communication services for OPFACs, communication centers, and individual subscribers. The communication system is a subset of the C^2 system with CCFs, general service tactical communication centers (TCCs) and special security communication centers (SSCCs) treated as OPFACs in their own right. They provide the facilities that are specifically tasked with planning, directing, coordinating and controlling the installation, operation, and maintenance of the communication system.

This section deals with MAF communications that encompass the most significant requirements. MABs and MAUs are subsets of a MAF in terms of their communication requirements.

504.2 Internal Interfaces. The communication system provides total communication services for its internal subscribers with the subscriber/communication system interaction as transparent as possible. Each category of subscriber is described briefly below:

504.2.1 Operational Facilities (OPFACs). OPFACs are defined in chapter I and their interrelationships within an architecture described in chapter II. A list and description of Marine Corps and pertinent other Service OPFACs is contained in the Marine Corps Technical Interface Concepts for Marine Tactical Systems.

504.2.1.1 Communication System-ADS Relationships. The communication system provides the links between OPFACs, COMMCENs, and individual subscribers. ADSs provide assistance to OPFACs in the performance of their functions. The basic concept for providing communication support to ADSs is for communication procedures to be transparent to the operators of the ADSs.

504.2.1.2 Supported ADSs. The communication system supports the following ADSs:

a. Tactical Data Systems

- Marine Air-Ground Intelligence System (MAGIS).
- Marine Integrated Fire and Air Support System (MIFASS).
- Tactical Combat Operations (TCO) System.
- Marine Air Command and Control System (MACCS).
- Battery Computer System (BCS).

b. Automated Data Processing Equipment

- Deployable Force Automated Services Center (DFASC)/MAGTF Automated Services Center (MASC).

- Automated Data Processing Equipment for the Fleet Marine Forces (ADPE-FMF)/End User Computing Equipment (EUCE).

Tactical data systems are described in chapter III. Automated information systems are described in chapter VI.

504.2.2 Communication Center (COMMCEN). A COMMCEN is a facility where record communication assets are located and operated.

a. General Service Tactical Communication Center. The TCC is responsible for processing incoming and outgoing messages not processed by other agencies, ADSs, or individual subscribers. The communication architecture describes the communication links for the COMMCEN.

b. Special Security Communication Centers (SSCCs)/Special Security Communication Teams (SSCTS). SSCCs and SSCTs provide special intelligence/special security communication support to the MAGTF headquarters and its subordinate elements. The radio battalion and the SSCTs provide the communication center facilities for establishing special intelligence/special security office (SI/SSO) communication centers. Transmission paths required for communications are accommodated between MAGTF elements and external SI/SSO activities by the communications system. SSCCS/SSCTs perform the same basic functions as the general service communication center; however, separate facilities are required.

504.2.3 Individual Subscribers. Individual subscribers normally are not supported by an ADS with a direct interface with the communication system. The communication architecture includes provisions for common user service to its individual subscribers. Transmission links are provided by switched multichannel radio, net radio, and cable.

a. Tactical Radio Nets. The communication system includes the radio equipment, cryptographic devices/keys, and procedural support to establish tactical radio nets.

b. Radio Battalions. The radio battalion conducts tactical signals intelligence (SIGINT), ground electronic warfare (EW), and COMSEC monitoring and analysis operations in direct support of FMF operations. The communication system includes the means by which the radio battalion gains access to the multichannel switched network through the Basic Net Radio Interface Device, C-6709/G, or its replacement, the Secure Digital Net Radio Interface Unit, TSEC/KY-90. Additionally, access is provided through single-channel, point-to-point radios that are routed through the MDF.

504.3 External Interfaces. Connections to external systems can be made by common user trunks or dedicated point-to-point circuits as the traffic requirements and the operational situations dictate. A goal in providing external interfaces is to achieve the required level of system interoperability without the use of special interface facilities. Interoperability standards required for achieving effective interfaces are discussed in 502.2.1.

504.3.1 External Communication Systems. The communication architecture encompasses the communication resources required to provide the landing force with external interfaces to the Defense Communications System (DCS), NTS, and other tactical communication systems needed for joint and combined operations. A deployed MAGTF may, if required, establish a terminal in the Worldwide Military Command and Control System (WWMCCS) through arrangements made by the controlling unified commander. Details concerning the WWMCCS are contained in chapter IV.

504.3.1.1 Naval Telecommunications System (NTS). The communication architecture includes provisions for communications between the commander landing force (CLF) and the commander amphibious task force (CATF). CATF relays record messages to the NTS until the MAGTF establishes direct HF or satellite links to a Naval Communication Area Master Station (NAVCAMS) or a Naval Communications Station (NAVCOMMSTA). This interface with the NTS is the primary link to external commands and agencies for a deployed MAGTF. The NAVCAMS and NAVCOMMSTA communicate directly with the DCS via the Automatic Voice Network (AUTOVON), the Automatic Digital Network (AUTODIN), and the Automatic Secure Voice Communications (AUTOSEVOCOM) systems. When the NTS shifts to digital voice processing in the late 1980's, narrowband voice communications, such as the HF and FLTSATCOM channels, will use linear predictive coding for converting analog voice into a nominal 2.4 kbps data rate. For wideband transmission links, where higher data rates can be supported, the NTS voice processing will use encrypted CVSD at 16 kbps. The communication system will include the terminal equipment for entry into the narrowband and wideband systems of the NTS. Marine Corps equipment used for these links is shown in the MAF nodal diagrams in sections 506-508 of this chapter. Additional details concerning elements of the NTS are contained in section 509.

504.3.1.2 Defense Communications System (DCS). The MAGTF enters the DCS via the NTS; via a DCS HF entry station; via a Ground Mobile Force (GMF) Gateway through a CINC ground station; or by leased circuits. This includes record, voice, and secure voice access to AUTOVON, AUTOSEVOCOM, Defense Special Security Communications System (DSSCS), and AUTODIN. MAGTF, division, wing, and FSSG headquarters will access the NTS via landing force HF equipment (AN/TSC-95) or FLTSATCOM terminals (AN/TSC-96).

504.3.1.3 Marine Corps Data Network (MCDN). The MCDN is a common user data communications network which provides computer-to-computer and terminal-to-computer communications for the supporting establishment and FMF units requiring access to Marine Corps Class I AISs.

The MCDN provides transmission of data in the form of both interactive and batch (bulk data) over dedicated leased lines, using Synchronous Data Link Control (SDLC) link protocol. MCND circuits are a mix of both point-to-point and multi-drop, providing the most cost effective and efficient communication paths available. The MCDN architecture has evolved over time to an IBM Systems Network Architecture (SNA) with communication processors (CPs) and host front end processors (HFEPs) as the major nodal control elements in the network. Under this architecture, any terminal connected to the network in an

on-line interactive mode can be given access to any host computer applications residing anywhere in the network.

Access to the MCDN for deployed FMF units will be via the Message Editing and Processing System (MEPS), a Class I AIS designed for computer-to-computer communications transmission. This software program acts only to provide a communications path for data over the more restrictive AUTODIN system. Additional methods for transmission of data to and from deployed FMF forces are under study, development, or planned acquisition; e.g., commercial Very Small Aperture Terminal (VSAT), enhancements to MARS stations.

The MCDN is in the process of integrating with the Defense Data Network (DDN). On completion of integration testing and acceptance of DDN service, the MCDN will provide users with DDN access into other DoD Service/Agency networks as required and authorized by the host Service or Agency. Also see section 509.7.3.

504.3.1.4 Other Tactical Communication Systems. The communication system will provide the interfaces with Army and Air Force tactical communication systems, either directly (as required by operational planning) or indirectly through use of intermediary tactical or strategic communication systems.

504.3.2 Command and Control Systems.

504.3.2.1 Worldwide Military Command and Control System (WWMCCS). WWMCCS provides the National Command Authority (NCA) and other high echelon commanders with the capability to exercise operational control of U.S. military forces. The DCS will provide the Marine Corps with a WWMCCS interface. The WWMCCS is described in more detail in chapter IV.

504.3.2.2 Amphibious Task Force (ATF) Command and Control Systems. The communication system includes provisions for interfaces with CATF and ATF command and control systems during an amphibious operation. Information concerning the interfaces required is located in sections 401 and 505.

504.3.2.3 Other Service Command and Control Systems. The communication architecture includes provisions for interfaces with Army and Air Force C^2 systems, as required. Information about potential interface with C^2 systems of other Services is contained in chapter III, chapter IV, JCS PUB 10, JTIDS TIDP, and STANAG 5501. Interoperability at the message level between Marine Corps TDSs and TDSs external to the MAGTF is addressed in the JINTACCS TIDP. Responsibility for message conversion protocols to accomplish this interoperability is the responsibility of the Marine Corps, and the method of performing this function is included in development specifications.

505 THE MARINE CORPS COMMUNICATION ARCHITECTURE IN AMPHIBIOUS OPERATIONS

The introduction of ADSs and digital communication equipment will significantly affect communication requirements during amphibious operations. This section describes potential problems concerning interoperability with naval communication and TDS equipment.

505.1 Marine Corps Communication Architecture During Phases of an Amphibious Operation. A description of communication requirements for each phase of an amphibious operation is contained in applicable FMFMs and other doctrinal publications. A brief discussion of each phase including the effects of ADSs on communications during an amphibious operation is contained in chapter II of this plan.

505.2 Interoperability in the Amphibious Environment

505.2.1 Marine Corps Operational Facilities (OPFACs) and Supporting Systems

505.2.1.1 Marine Corps Tactical Data Systems. Effective integration of TDSs into OPFACs requires standardized interfaces between the tactical data systems supporting the OPFACs. Interfaces linking OPFACs and ADSs within the same ship, between ships, or on ship and shore may be in any of the 15 unique combinations of manual, semiautomated or fully-automated interfaces described in appendix B and the Marine Corps TIC.

505.2.1.2 Technical Interface Concepts. System interface requirements between ADSs and between OPFACs are identified in the TIC, which also provides planning guidance for achieving interoperability among ADSs.

505.2.1.3 Marine Corps Operational Facilities. Principal Marine Corps OPFACs that will exchange information with Navy OPFACs aboard the CATF flagship are listed in table 5-3.

505.2.1.4 Shipboard Installation. In coordination with the Navy, plans are being made to install selected MTACC systems and associated communication equipment aboard Navy amphibious ships. A MIFASS, TCO, and Position Location Reporting System (PLRS) configuration, referred to as "Shipboard MTACCS" is being permanently installed on the Amphibious Assault Ship (Multi-Purpose) (LHD 1) Class. The Shipboard MTACCS configuration is also being planned for amphibious command ships (LCCs) and being considered for amphibious assault ships (general purpose) (LHAs).

Table 5-3. Landing Force OPFACs Exchanging Information With Navy OPFACs.

LANDING FORCE OPFACs	OPFAC LOCATION	TDSs
Landing force operations center (LFOC)	Afloat	MIFASS/TCO & PLRS
Landing force combat operations center (COC)	Ashore	MIFASS/TCO & MAGIS
Tactical air command center (TACC)/ tactical air direction center (TADC)	Ashore	AN/TYQ-1 and AN/TYQ-3A. Future ATACC.
Tactical air operations center (TAOC)	Ashore	AN/TYQ-2 and AN/TYQ-3A. Future AN/TYQ-23
Direct air support center (DASC)	Ashore	IDASC/MIFASS
Tactical Air Control Parties (TACPs)	Ashore	DCT
Shore Fire Control Parties (SFCPs)	Ashore	DCT
Division, infantry regiment and infantry battalion fire support coordination centers (FSCC)s	Ashore	MIFASS & PLRS
Artillery fire direction centers (FDCs)	Ashore	MIFASS

505.2.2 Navy Operational Facilities and Supporting Systems

505.2.2.1 Navy Command, Control, Communications and Intelligence (C^3I)/ Combat Systems. Navy C^3I/Combat Systems, with which Marine Corps ADSs will interoperate through one of the various types of interfaces described in appendix B and the Marine Corps TIC, are listed below. These C^3I/Combat Systems are summarized in chapter IV, section 401.

- Integrated Tactical Amphibious Warfare Data System (ITAWDS) on LHAs and LHDs. ITAWDS consists of:

  - Tactical Data System (TDS) and

- Tactical Information Processing System (TIPS) on LHDs.

- Management Information System (MIS) on LHAs.

- Amphibious Flagship Data System (AFDS) on LCCs. AFDS will be replaced by ITAWDS at some future date as part of the Navy Warfighting Improvement Program (WIP). AFDS consists of:

  - Naval Tactical Data System (NTDS) and

  - Amphibious Support Information System (ASIS).

- Flag Data Display System (FDDS) on LHDs and, at some future date as part of the Navy WIP on LCCs.

- Naval Intelligence Processing System (NIPS) on LCCs, LHAs, and LHDs.

505.2.2.2 Navy Operational Facilities. The below listed OPFACs are established to support CATF when his flagship is in an LCC, LHA, or LHD. Navy C^3I/Combat Systems supporting each OPFAC are listed following the OPFAC title. Command and control spaces aboard the flag-configured landing platform, dock (LPH(F)) are not supported by C^3I/Combat Systems discussed in this plan.

- Flag Plot/Tactical Flag Command Center (TFCC):

  - LCCs: AFDS-NTDS and -ASIS. ITAWDS-TDS and -TIPS will replace AFDS. FDDS and Shipboard MTACCS will be added in future as part of the Navy WIP.

  - LHAs: ITAWDS-TDS and -TIPS. Shipboard MTACCS will be added in future as part of the Navy WIP.

  - LHDs: FDDS, ITAWDS-TDS and -TIPS. MIFASS/TCO will be retrofitted when those systems are fielded. PLRS information will be provided by the PLRS interface with MIFASS/TCO.

- Supporting Arms Coordination Center (SACC):

  - LCCs: AFDS-NTDS and -ASIS will be replaced by ITAWDS-TDS and -TIPS. Shipboard MTACCS will be added in future.

  - LHAs and LHDs: ITAWDS-TDS and -TIPS. Shipboard MTACCS will be added in the future.

- Tactical Air Control Center (TACC)/Air Operations Section in the Combat Information Center (CIC):

  - LCCs: AFDS-NTDS and -ASIS will be replaced by ITAWDS-TDS and -TIPS.

- LHAs
  and
  LHDs: ITAWDS-TDS and -TIPS.

- Helicopter Direction Center (HDC):

  - LHAs
    and
    LHDs: ITAWDS-TDS and -TIPS.

- Joint Intelligence Center (JIC):

  - LCCs: NIPS and AFDS-ASIS. ASIS will be replaced by ITAWDS-TIPS.

  - LHAs
    and
    LHDs: NIPS and ITAWDS-TIPS.

505.2.2.3 Space Availability. The availability of space within the various OPFACs aboard ship, combined with electrical power and electromagnetic interference (EMI) considerations, may preclude temporary installation of landing force ADS and communication equipment. However, permanent installation of a Shipboard MTACCS suite is planned for ships of the LHD 1 (WASP) Class. The Navy WIP includes provisions for permanent installation of shipboard MTACCS in LCCs, LHAs, and LPHs. The Marine Corps has a stated requirement for space and power to operate EUCE aboard amphibious ships.

505.3 Communication System Concept of Employment

505.3.1 Unit Level Message Switch. The proposed means of satisfying the bulk of TDSs primary connectivity requirements is a message-switched system. The ULMS will be used at nodal points in the multichannel switched system to terminate trunks, long-local, and local-subscriber circuits. Links from the ULMS to subscribers or other ULMS can be via wire-line, single-channel radio, or multichannel transmission equipment.

505.3.1.1 Afloat. The ULMS will not be installed aboard ship in conjunction with the permanent installation of Shipboard MTACCS. Permanently installed shipboard MTACC systems will be interconnected, as required, with other C^3I/Combat Systems in the same ship via a Shipboard MTACCS Interface Controller (SMIC) or equivalent system. External MTACC systems' links will use permanently installed, shipboard, secure, dedicated, point-to-point, wideband single-channel (WBSC) radio links.

505.3.1.2 Movement Ashore. An ULMS installation will be established ashore as early as possible by advance elements of one of the regimental landing teams (RLTs). This installation will eventually become the ground combat element (GCE) ULMS facility. Initially, all elements ashore will be accommodated as local/long-local subscribers to this facility. By the time all RLTs are established ashore, each will have its own ULMS facility trunked to the original facility that will then be operated by GCE headquarters personnel. Primary connectivity for ADS traffic, except PLRS, will be a

secure, dedicated, point-to-point, WBSC, digital-data trunk between the original ULMS facility ashore and the Shipboard MTACCS installation in the amphibious task force command ship.

505.3.2 Multichannel Transmission Equipment

505.3.2.1 Channel Allocation. The multichannel radio equipment descriptions in appendix D specify the channel capacity of the equipment. Diagrams of the MAF multichannel system are contained in sections 506, 507, and 508 for the time-slice projections of communication equipment.

505.3.2.2 Ship-to-Shore Communications. There is currently no operationally acceptable equipment that will satisfy the wideband, multichannel, ship-to-shore, secure-voice and data exchange requirements over the distances associated with over-the-horizon operations. Satellite communications, if the landing force terminal can be established ashore early enough, can provide communications over the required distances. However, the size and weight of the GMF satellite communication terminal and FLTSATCOM terminal equipment will probably preclude their early application to ship-to-shore link requirements. JTIDS, if acquired and adapted to landing force requirements, may satisfy the traffic volume requirement, but would be limited in range to a ship-to-shore tropospheric scatter link, or to automatic airborne relays which might be employed.

505.3.3 Single-Channel Radio Operations. Single-channel radio operations include both radio nets and point-to-point radio links. Most single-channel links will perform essentially the same functions as they did prior to the introduction of TDSs. The difference is that the information passed will be handled primarily by computer rather than manually; there will always be a requirement for voice communication.

505.3.3.1 Single-Channel Radio Point-to-Point Links. Historically, point-to-point, single-channel links have been used very sparingly. During the initial phases of an amphibious operation, when the multichannel system is not available, more widespread use of point-to-point WBSC links will be essential to support TDSs.

a. Continuous-Carrier Radio Operation. Use of WBSC radios to provide full-duplex, point-to-point links requires continuous-carrier operation. Tactical radios, normally used intermittently in half-duplex net operations, are not usually designed to operate in this manner. Of the equipment expected to be available in the midrange timeframe, only the RT-524, modified for wideband, continuous operation and the TSEC/KY-67 BANCROFT are planned to have this capability.

b. Data Terminal Equipment (DTE)-to-DTE Forward Error Correction (FEC). Both the DTE and ULMS trunk circuitry and associated software provide for the application of FEC techniques. Direct WBSC communications links (DTE-WBSC----WBSC-DTE) can be established through use of DTE WBSC ports. In either case, the interconnecting radio or other link must have a bit error rate (BER) of not more than 10^{-3}.

505.3.3.2 Single-Channel Radio Net Operations. The inherent nature of an amphibious operation dictates that, during a significant portion of the assault phase, reliance on any means other than net radio as the primary means of communication is impractical. FMFM 10-1 includes a description of the function and composition of HF, VHF, and UHF radio nets. Other nets will be established as required. Single-channel radio net operations will perform essentially the same functions as they have in the past.

505.3.4 Technical Considerations in the Use of Radio

505.3.4.1 Transmission Range. The probability of greater ship-to-shore standoff distances in future amphibious operations will increase transmission range difficulties.

a. Ship-to-Shore. Increased ship standoff distance will result in a degradation of critical ship-to-shore tactical circuits. Distances may exceed the reliable range for VHF or UHF LOS transmission, but be less than that required for reliable HF ionospheric (skip) propagation.

b. Bit Error Rate. The extended ranges will result in an increased BER. At the same time, the shift to wideband, digital, single-channel, radio operation demands a better signal-to-noise ratio at the receiver. This is needed to ensure attainment of the BER essential to the digital operating mode.

505.3.4.2 Use of Relays and Satellite Terminals. Problems posed by ship-to-shore standoff distances and the requirement for high quality circuits for wideband, digital, single-channel radio operations will require the increased use of HF communications and relay stations for VHF and UHF nets. Relay stations may be either airborne or mounted on surface platforms. Airborne relays may be mounted in various types of piloted aircraft or in remotely piloted vehicles (RPVs). Airborne JTIDS terminals and development of the JTIDS manpack terminal may provide possible solutions. Manpack satellite terminals are also potential solutions to the problem.

505.3.4.3 Frequency Management. Although the need for efficient frequency management is essentially the same as it has been in the past, the need for improved-quality data circuits for interactive TDSs and the use of spread-spectrum/frequency-hopping techniques increases its importance. The radios used in PLRS, JTIDS, and SINCGARS will require larger slices of the radio frequency (RF) band to accommodate their frequency-hopping. This comes at a time when the frequency spectrum is already crowded and difficult to manage. As a result, future amphibious operations will be characterized by an increase in both the difficulty and importance of establishing positive and efficient frequency management. The AN/TRQ-35 Tactical Frequency Management System and the PROPHET Frequency Management System will assist in management of HF communication circuits.

506 COMMUNICATION ARCHITECTURE PROJECTION, 1987-1991

The projected communication architecture for the 1987-1991 time frame is described in this section. During this period the communication system will continue to be primarily an analog communication system.

506.1 New Equipment. The following items of communication equipment and TDSs are scheduled to be fielded during the 1987-1991 time period. AISs employed by deployed MAGTFs and that are or will be supported by ADPE-FMF, FMF-EUCE, and the DFASC are described in chapter VI. Brief technical descriptions of communication items are contained in appendix D. ADSs are described in chapters III and VI. Dates for achievement of initial operational capabilities (IOCs) are best available estimates.

NEW ITEM	REPLACES	IOC
Subscriber Facilities		
Terminal Equipment:		
Automated Data Processing Equipment - Communication Message Processor (ADPE-CMP)	New item	1988
Digital Communications Terminal (DCT) AN/PSC-2	New item	1988
Loop Key Generator (LKG) TSEC/KG-82	New item	1986
Tactical Facsimile Set AN/UXC-7	AN/GXC-7A	1987
Dedicated Loop Encryption Device (DLED) TSEC/KG-84A/C	TSEC/KW-7, -26, TSEC/KG-13, -30, -36	1987
Advanced Narrowband Digital Voice Terminal (ANDVT) (TACTERM)	TSEC/KY-75 PARKHILL	1988
Advanced Narrowband Digital Voice Terminal (ANDVT) (MINTERM)	TSEC/KY-65 PARKHILL	1991
Secure Digital Net Radio Interface Unit (SDNRIU) TSEC/KY-90	Radio Control Set C-6709/G	1988
Digital Subscriber Voice Terminal (DSVT) TSEC/KY-68	New item	1988
SEELEY Trunk Encryption Device (STED) TSEC/KG94/94A	New item	1988
Digital Nonsecure Voice Terminal (DNVT) TA-954	TA-838, TA-938	1988
Special Security Communication Central (SSCC), AN/MSC-63A	AN/MSC-63	1988

NEW ITEM	REPLACES	IOC
Terminal Equipment:		
Tactical Communication Center (TCC), AN/MSC-63A (the SSCC and TCC will use the same hardware with different software)	AN/TYC-5 AN/TGC-37	1990
Automated Data Systems:		
Position Location Reporting System (PLRS) AN/TSQ-129	New system	1988
Tactical Air Operations Module (TAOM) AN/TYQ-23	AN/TYQ-3A and AN/TYQ-2	1990
Battery Computer System (BCS) AN/GYK-29	M-18 FADAC	1988
End User Computing Equipment (EUCE)	ADPE-FMF	1988
All-Source Imagery Processor (ASIP)	11 & 1P	1991
Switching Equipment		
Central Office, Telephone, Automatic AN/TTC-42( )V (ULCS)	AN/TTC-38(V)	1990
Switching Unit Telephone, Automatic SB-3865(P)TT (ULCS)	SB-3614( )/TT	1990
Transmission Systems		
Single Channel Radios:		
Radio Set AN/PRC-113	AN/PRC-75	1986
Radio Set AN/VRC-83	AN/ARC-51A	1986
Have Quick Time Distribution Equipment (TDE)	New item	1990
Multichannel Radios:		
High Frequency Communication Central (HFCT) AN/TSC-120	AN/TSC-15	1991
Satellite Communication Terminal AN/TSC-85A	New item	1986

NEW ITEM	REPLACES	IOC
Multichannel Radios:		
Ground Mobile Forces Satellite Communica- Terminal AN/TSC-93A	New item	1986
Cable Systems		
Fiber Optic Cable System	CX-11230 Cable System	1990

506.2 Subscriber Facilities

506.2.1 Telephones. During this period, analog nonsecure telephones TA-312, TA-838, and TA-938 will remain in use with the manual switchboard SB-22/PT and the analog automatic switches AN/TTC-38 and SB-3614()/TT. Secure telephone requirements will continue to be satisfied by the TSEC/KY-65 (PARKHILL) security equipment and the Telephone Security Interface Unit (TSIU) used in conjunction with one of the nonsecure telephones. The DNVT TA-954 and the DSVT TSEC/KY-68 will become available during this period. Their use will remain limited until the introduction of the digital circuit switches.

a. Digital Subscriber Voice Terminal. The DSVT performs the A-D conversion, signaling, and cryptographic functions that provide either secure or nonsecure access to the TRI-TAC family of digital switches. It provides for digital operations using CSVD techniques at 16 or 32 kbps. It can operate at a range of 5 miles from the switchboard without pulse restoration. The DSVT can be operated in either full-duplex or half-duplex modes.

b. Digital Nonsecure Voice Terminal. The DNVT has essentially the same technical characteristics and operational capabilities as the DSVT except it does not have the capability to provide secure service.

c. Advanced Narrowband Digital Voice Terminal. The ANDVT/MINTERM will supplement the Tactical Speech Security Equipment (PARKHILL) TSEC-KY-65 and eventually replace it. The ANDVT provides secure transmission of voice, data, and signaling information over point-to-point or netted circuits. It is used with HF, VHF, or UHF radios, UHF satellite terminals, wire, and digital equipment whose bit rate does not exceed 2.4. kbps. It may access the digital multichannel switched system via the TSEC/KY-90 SDNRIU.

506.2.2 Data Terminal Equipment

a. AN/GXC-7A Tactical Facsimile Set. The AN/GXC-7A will be replaced by the AN/UXC-7 during this period.

b. AN/PSC-2 Digital Communications Terminal. The introduction of the DCT will allow a user to transmit, edit, display, and review preformatted, free text messages and graphics. It can accommodate transmission rates up to 2400 baud using the frequency shift keying (FSK) technique or 16 kbps in the

baseband mode. The DCT will be employed with the TSEC/KY-57 (VINSON) to achieve secure transmission over VHF/UHF radio links.

506.2.3 Tactical Data Systems. During this period, several new TDSs will become operational.

a. PLRS. PLRS will achieve an IOC in 1988. PLRS data will be distributed via the PLRS communication net. After the fielding of MIFASS in 1992, PLRS data will be distributed by the MIFASS unit performing position location processing via the switched multichannel system or wide band single-channel radio.

b. TAOM. TAOM will achieve an IOC in 1988. It will be provided with analog voice communications with other C^2 centers via the AN/TTC-38(V) Automatic Telephone Central Office.

c. ASIP. ASIP will achieve an IOC in 1991. It will replace the II and IP segments of MAGIS.

d. BCS. The BCS uses U.S. Army standard character-oriented messages that are also used with the Army Tactical Fire Direction (TACFIRE) system. Marine Corps systems are being developed for bit-oriented message standards. The two standards are not compatible. Initial plans call for the implementation of TACFIRE message software in the DCT so that it can talk to the BCS. Current plans call for delivery of the software for use of TACFIRE messages in the DCT late in 1987. The planned IOC for BCS in the Marine Corps is 1988.

e. Marine Corps Worldwide Military Command and Control System (WWMCCS) Information System (MARWIS) Terminals. During 1988 MARWIS terminals will be installed at the headquarters of major FMF commands. These terminals will be deployable as required. MARWIS terminals will consist of IBM PC/XTs with table top printers and high speed remote line printers. They will be used at the national, theater, and supporting levels of command to support uni-Service, joint, and combined operational planning and execution in peacetime, crisis, and in war. MARWIS terminals support Resource and Unit Monitoring (RUM), and Conventional Planning and Execution (CPE) functions which will be further expanded in the Joint Operation Planning and Execution System (JOPES) now under development. Additional details concerning WWMCCS and MARWIS are contained in section 404.1.

f. Additional Information. For more detailed descriptions of the TDS, refer to chapter III.

506.2.4 Automated Information Systems. Deployable AISs fielded during this period will include Real-Time Finance and Manpower Management Information System (REAL-FAMMIS), Unit Status and Identification Report (UNITREP), Marine Integrated Maintenance Management System (MIMMS), Marine Corps Standard Supply System (M3S), Standard Embarkation Management System (SEMS), Naval Aviation Logistics Command Management Information System, (NALCOMIS), Shipboard Uniform Automated Data Processing System (SUADPS), Flight Readiness Evaluation Data System (FREDS), and the Maintenance and Material Management System (3M). SUADPS, 3M, and NALCOMIS are Navy aviation systems that will use Navy

processing equipment (SNAP I, Phase 2). The other systems will use ADPE-FMF, EUCE, and the DFASC or the MASC. Data is compiled at the DFASC/MASC located with the combat service support element (CSSE).

a. Employment. REAL FAMMIS, UNITREP, MIMMS, and M3S will be employed by all echelons, MAF through battalion and squadron.

b. Connectivity. Primary means of communication/interaction between ADPE-FMF/EUCE and the DFASC/MASC will be the switched multichannel communication system with backup by courier using diskettes or paper media and batch transfer between the DFASC and a regional automated services center (RASC) outside the amphibious objective area. Tactical C^2 systems take precedence over AISs for data communications in the AOA. Units within the combat service support (CSS) area can be hard wired for direct access to the DFASC. However data communications support for units outside the CSS area may not be available during the initial build up ashore or during other fluid operations. Until such time as communication resources can be identified and committed to supporting units requiring on-line data communications access to the DFASC, these units will input data on diskette media and deliver them to the DFASC via courier. Output is returned to the originating unit by the reverse process. Because of their scarcity, competition for long-haul data communications assets may preclude the establishment of a direct data communication link between the DFASC and the RASC. Initial data communication from the DFASC to the RASC will be limited to batch data transmission via AUTODIN.

c. Additional Information. Additional details concerning AISs are contained in chapter VI.

506.2.5 Communication Centers

506.2.5.1 Tactical Communication Center (TCC). During this period the Communications Central AN/TGC-37(V), which uses obsolete electromechanical teletypewriter equipment and other peripherals that are slow, unreliable, and increasingly difficult to maintain, and the Data Communications Central AN/TYC-5A(V) will be replaced by a product-improved AN/MSC-63. The Tactical Communications Center AN/MSC-63A(V) will be able to store and forward record traffic from magnetic tape for 30 days. Signal transmission will be accomplished either of two ways, depending on the choice of modem. All seven of the encrypted channels will have KY-84 encryption devices, three of the available channels can use either the MD-701C Land Line Modem or the MD-1142 HFM. There will be eight full-duplex local subscribers, which can be remotely located, comprised of either the AN/UGC-74A(V)3, or single subscriber terminals for message preparation, transmission, and reception. There will be a direct AUTODIN entry capability for MAFs and MABs via the AN/MSC-63A(V) provided suitable trunking is available.

506.2.5.2 Special Security Communication Center (SSCC). The Communications Central, AN/MSC-63 used as the entry into the DSSCS, will be replaced by the AN/MSC-63A(V) Special Security Communications Central. The hardware of the TCC and the SSCC will be the same but each will have separate software to accommodate different functions.

506.3 Switching Facilities. The analog Automatic Telephone Central Office AN/TTC-38(V) and the analog Telephone Switchboard SB-3614( )/TT will remain in use during this period. During the latter part of the period, the ULCSs AN/TTC-42 and SB-3865(P)TT will be phased into service. Initially they will augment and then eventually supplant the analog AN/TTC-38 and SB-3614( )TT. The SB-3614( )/TT and SB-22/PT will continue to be used at the infantry battalion level.

506.3.1 Automatic Telephone Central Office, AN/TTC-38(V). The AN/TTC-38 is a 300-or 600-line/trunk, 4-wire, analog, automatic telephone central. It provides features such as conferencing, precedence/preemption, direct dialing, direct access service, and call forwarding. It also provides automatic fault location and a line load control feature to refuse trunk service to telephone subscribers having class restrictions programmed for their terminals. It has both a narrowband and a wideband capability and is designed to provide an interface for AUTOVON on a private branch exchange access trunk. The AN/TTC-38 is employed at the headquarters of the MAF, division, Marine aircraft wing (MAW) and FSSG.

506.3.2 Telephone Switchboard, SB-3614( )/TT. The SB-3614 is an analog automatic 30-line switch. It provides automatic local service and unassisted outward dialing capability to subscribers possessing dial pulse or dual tone multifrequency (DTMF) telephones. Subscribers possessing 20-Hertz ringdown telephones require operator assistance.

506.3.3 Basic Net Radio Interface Device (BNRID), C-6709/G. The BNRID provides an interface between radios and the tactical switches. It requires manual control for call setup but performs automatic control for channel monitoring and receiver/transmitter switching functions after the call is established. It is physically deployed with a single-channel radio and transforms it into a local user of the circuit switch. It can operate with either an analog switch or an analog loop from a digital switch.

506.3.4 Automatic Telephone Central Office, AN/TTC-42. The AN/TTC-42 is the backbone of the ULCS program. It is housed in a single S-280 shelter and is transportable by an M-35, 2-1/2 ton truck. It is a 150-line automatic circuit switch which will replace the AN/TTC-38. The AN/TTC-42 will provide service to both secure and nonsecure digital subscribers, as well as selected analog subscribers. Both digital COMSEC and multiplexing equipment are integral to the switch. It provides direct subscriber access, abbreviated dialing, five-party conferencing, five levels of precedence, preemption, call transfer, intercept and extension, emergency by-pass, and fixed directory service. Although a digital switch, the AN/TTC-42 will accomplish automatic and semiautomatic switching for a mixture of 24 analog trunks and loops. The AN/TTC-42 will be interoperable with the ULMS and analog tactical switchboards in the inventory.

506.3.5 Automatic Digital Switchboard, SB-3865(P)/TTC. The SB-3865(P)/TTC will replace the SB-3614( )/TT and the SB-3082(V)2/GT at all command levels. The SB-3865 is a 30-line switch. Two or three SB-3865s may be stacked to provide 60 or 90 lines. The SB-3865 consists of two man-transportable modules, weighing approximately 80 pounds each.

The SB-3865(P)/TT can provide abbreviated dialing, direct access, call intercept, call routing via a primary and alternate trunk group, five levels of precedence, preemption, sole-user patching, and unattended/remoted call service function. The SB-3865 contains three trunk groups. Each trunk group has 18 channels that are compatible with the AN/TTC-42 circuit switch, the AN/GYC-7 ULMS, and the SDNRIU. Security may be provided on one of the trunk groups with an external trunk encryption device (TSEC/KG-94A).

506.3.6 Secure Digital Net Radio Interface Unit, TSEC/KY-90. The TSEC/KY-90 is a secure, man-transportable device that provides an interface between a digital switchboard and a single-channel radio net. It contains integrated COMSEC circuitry optimized for VINSON.

506.4 Communications Control Facilities

506.4.1 System Control Equipment. A microcomputer based, software driven Communications System Control Equipment will be tested during FY88/89 which will offer an automated capability to direct radio circuit management, spectrum management, circuit routing and status, electronic equipment data base, co-site analysis, and other COMMCON functions.

506.4.2 Communication Technical Control Center, AN/TSQ-84( ). The AN/TSQ-84 will continue to be the near-term central facility for exercise of technical communications control at the MAF, division, aircraft wing, and FSSG. It is used to monitor, test, reassign, and restore circuits. A manual switchboard and an intercom assist in system control. The AN/TSQ-84 will be replaced by a technical control equipment to be determined during the FY88-89 time frame.

506.4.3 Main Distribution Frame. At lower echelons, the primary facility for technical control will continue to be an MDF. An MDF uses terminal boxes, standard patch panels such as the SB-3659/U, and locally fabricated manual patch boards. Reassignment of circuits is done manually as required.

506.5 Transmission Systems

506.5.1 Multichannel Systems.

a. The HFCT will be the only multichannel transmission system introduced during this period. It will replace the AN/TSC-15. It will be capable of simultaneously providing on one sideband a single channel of secure or nonsecure, analog or digital voice and, on the other sideband, four variable-speed data channels multiplexed into a single 2400 bps stream. Alternatively, it will provide one secure or nonsecure, wide shift frequency shift keying, record traffic channel at selectable information transmission rates of 75 to 2,400 bps, and, simultaneously, one secure or nonsecure voice channel. The HFCT will be an easily deployable, reliable, long-haul HF radio. It will be used for communications between the MAGTF headquarters and its major subordinate commands and for communications out of the amphibious objective area. It will also be used for communications between major elements of the aviation combat element.

b. A modification kit will be provided for the Telegraph-Telephone Terminal Set, AN/VCC-2 in 1990. The current AN/VCC-2 is a vehicle mounted

terminal that provides two orderwire channels, eight telegraph channels, and eight telephone channels. It is used with the AN/MRC-135, RT-524/VRC, and R-422/VRC radios. The modification kit will include the necessary parts to modify the AN/VCC-2 to provide one orderwire channel; four telephone channels, 300-3500 Hz; four voice frequency (VF) telegraph channels; and two wide-band channels that will be compatible with the TSEC/KY-57/HYX-57 and the TSEC/KG-84A.

506.5.2 Single-Channel Radios. Because of the mobility requirements and speed and simplicity of installation and operation, single channel radios will continue to play the primary tactical communications role throughout the MAGTF in the early stages of an amphibious assault, and at all times during offensive combat in infantry and mechanized operations.

506.5.2.1 HF Radios. The AN/MRC-138, AN/PRC-104, AN/URC-97, and AN/GRC-193 will meet Marine Corps single-channel HF radio requirements during this period. No new HF single-channel radios are planned for this period. The Short Term Anti-Jam (STAJ) modification program will enhance the operating capabilities of the AN/PRC-104, AN/MRC-138, and AN/GRC-193 HF radios by providing an anti-jam capability through the use of a frequency hopping mode. The STAJ modification will provide interoperability with similarly configured Army, Air Force, and Navy radios. STAJ will also allow the Marine Corps to achieve interoperability with the Regency Net for the employment of nuclear weapons. The planned for IOC for the STAJ modification is 1990 with achievement of full operational capability in 1994.

506.5.2.2 VHF Radios

a. The AN/PRC-68 and TSEC/KY-67 BANCROFT radios will continue meet some Marine Corps single-channel, VHF radio requirements during this period.

b. The AN/VRC-12 family of radios and the AN/PRC-77 radio will continue to be used during this period.

506.5.2.3 UHF Radios

a. The AN/MRC-138(UHF) and AN/GRC-171A(V)4 will continue to meet some Marine Corps single-channel UHF radio requirements during this period.

b. Radio Set AN/PRC-113 will replace the AN/PRC-75 radio during this period. The AN/PRC-113 is designed for forward air control communications. It also has a VHF capability, operating in the 116-147 MHz range. The AN/VRC-83 is the vehicular version of the AN/PRC-113.

c. Have Quick TDE provides time of day (TOD) or frequency synchronization to frequency hopping UHF radios. Accurate TOD is required to determine the operating frequency of a radio net relative to a specific point in time. The Have Quick TDE receives and stores Universal Coordinated Time from the Transit Satellite System and transmits it to embedded clocks in the AN/PRC-113, AN/VRC-83, AN/GRC-171A(V)4, and AN/ARC-182 Have Quick capable ground and air UHF radios. The Have Quick TDE enables the above radios to operate in the anti-jam ECCM mode.

506.5.3 Satellite Terminals. During this period two satellite systems will support landing force long-haul communications. The systems are the Navy UHF FLTSATCOM system and the DSCS, which operates in the SHF band.

506.5.3.1 Navy UHF Fleet Satellite Communication System.

506.5.3.1.1 Satellite Communications Central, AN/TSC-96(V) Product Improvement Program (PIP). The AN/TSC-96(V) provides CLF with access to the FLTSATCOM system. It has been in service since 1981 and is used by CLF primarily for external communications with CATF and the NAVCAMS or a NAVCOMMSTA. It provides terminal and transmission equipment in two shelters for three UHF satellite communication channels. One channel is secure, half-duplex teletype for the Naval Modular Automated Communications System (NAVMACS); one channel is secure, half-duplex digitized voice; and one channel may provide either four multiplexed fleet broadcast channels from a group of 15 or an additional secure voice channel. A PIP is currently underway to increase the capabilities of the AN/TSC-96(V). The OL-199 (S-280) shelter is being replaced with the new standard 10-foot ISO shelter. Some of the equipment inside; i.e., printers and teletype; is being replaced. An improved teletype with memory and bulk storage is being added plus a demand assigned multiple access (DAMA) modem. The DAMA modem acts like a multiplexer by placing four signals on a single radio frequency carrier. The AN/TSC-96(V) will be compatible with the TCC, enhancing the capabilities of both systems. The IOC for the product improved system is scheduled for FY 1990. Additional details are contained in appendix D.

FLTSATCOM consists of information exchange subsystems for communications, system control, and quality monitoring. CLF has access to the subsystems described below. Additional details concerning FLTSATCOM are contained in section 509.

a. Fleet Satellite Broadcast (FSB) Subsystem. This is an expansion of the fleet broadcast system. The AN/SSR-1 receiver group allows CLF to copy four covered channels of the fleet broadcast. This is a receive-only capability.

b. Common User Digital Information Exchange Subsystem (CUDIXS). This subsystem provides CLF with the means for transmitting general-service message traffic out of the amphibious objective area. This is a transmit-only capability unless CLF is a special subscriber to CUDIXS.

c. Secure Voice Subsystem. This is a narrowband UHF link that provides CLF with secure voice communications between ships and out of the amphibious objective area. This subsystem can also provide entry to the AUTOSEVOCOM System via the NAVCAMS secure voice manager.

506.5.3.1.2 Manpack Satellite Terminal, AN/PSC-3 and Vehicular Satellite Terminal, AN/VSC-7. The AN/PSC-3 is a portable, manpack, UHF satellite communications radio. It provides half-duplex digital or voice communications. Digital communications is provided by using the AN/PSC-2 DCT with the AN/PSC-3 or AN/VSC-7. The DCT can be used with the TSEC/KY-57 to

provide secure digital communications. The AN/VSC-7 is a vehicular version of the AN/PSC-3 and can provide net control for up to 15 AN/PSC-3s.

506.5.3.2 Defense Satellite Communications System (DSCS). The DSCS is used by MAGTFs primarily as an internal landing force communication trunking system. It is used to tie together the MAGTF headquarters and the headquarters of the GCE, ACE, and CSSE. The system uses the DSCS constellation of satellites (DSCS II or DSCS III) that have both narrow beam and earth coverage footprints. The AN/TSC-85A and the AN/TSC-93A are the system multichannel terminals.

506.5.3.2.1 Satellite Communications Terminal, AN/TSC-85A. The AN/TSC-85A is a SHF multichannel terminal capable of transmitting up to 96 channels of voice and data using both internal and external multiplexer equipment. The AN/TSC-85A is capable of nodal, non-nodal, mesh, or point-to-point operations of tactical trunking networks. The nodal capability refers to the employment of one terminal serving as a nodal or hub station, simultaneously providing full-duplex multichannel links to as many as four widely dispersed destinations using the same satellite. The terminal at the destination is usually the AN/TSC-93A but may be either the AN/TSC-93A or the AN/TSC-85A.

506.5.3.2.2 Ground Mobile Forces (GMF) Satellite Communications Terminal, AN/TSC-93A. The AN/TSC-93A is an SHF multichannel terminal capable of transmitting up to 24 channels of voice and data using self-contained multiplex equipment. The AN/TSC-93A is used as a non-nodal or point-to-point terminal in tactical trunking networks. The AN/TSC-93A can provide only one link, usually to the nodal terminal, an AN/TSC-85A.

506.5.4 Cable Systems

506.5.4.1 Fiber Optic Cable System (FOCS). FOCS provides a full-duplex fiber optic transmission link between ULCSs and corresponding equipment and assemblages. It is being designed to operate over unrepeated lengths of 6 Km (with a design goal of 8 Km) at rates from 72 kb/s to 2.304 Mb/s without adjustments. The following links will be provided by the FOCS:

- AN/TTC-42 to AN/TTC-42
- AN/TTC-42 to SB-3865
- SB-3865 to SB-3865
- AN/TTC-42 to AN/TRC-170
- AN/TTC-42 to RMC (TD-1234)
- SB-3865 to RMC (TD-1234)
- AN/TRC-170 to RMC (TD-1234)
- MD-1026 GM to MD-1026 GM
- AN/GRC-201 to AN/TTC-42 and SB-3865

The components of the FOCS include the fiber optic applique (FOA) and terminals, the fiber optic cable assemblies, the fiber optic test set (FTS), splice and repair kits, and interconnecting cables. Nominal 110 volt AC

(50/60 Hz) or 28 volt DC power must be supplied to the FOA; no modification to the supported equipment is required.

506.5.4.2 Marine Corps Fiber Optic Multiplex System (MFOMS). The MFOMS is intended to replace the 26-pair cables CX-4566 in many applications. It is designed to operate over a distance of at least 2 km and will connect both electrically and mechanically at each end of the transmission link to the UG-1837 type connector at the cable entrance panel of the supported equipment. It exploits the advantages of fiber optics to reduce the volume and weight ordinarily associated with metallic conductors. Furthermore, the MFOMS allows extension of the deployment range as well as providing electromagnetic interference (EMI) and radio frequency interference (RFI) immunity.

506.6 System Nodal Diagrams. Figures 5-1 through 5-15 depict the Marine Corps Communication architecture for selected nodes in the 1987-1991 time period. The diagrams do not attempt to reflect the quantity of equipment at any given node, which may vary with circumstances. The diagrams should be viewed as a notional or baseline representation. There are many potential configurations and applications for the equipment available during the time period.

a. The diagrams depict nearly all transmission system connections passing through the MDF. The MDF is the point at which a subscriber or switch can be patched or cross connected to any compatible device available at the node.

b. Although most of the links between nodes are represented by multichannel radio equipment, it is important to remember that cable or wire may be used where they are satisfactory. Likewise, single-channel radio may be used when multichannel circuit operation is impractical.

c. Figure 5-16 is an overview of the multichannel transmission system for the 1987-1991 period. It depicts the channels and transmission rates for equipment used for each link, as depicted in the nodal diagrams. Brief descriptions of the communication equipment shown in the diagrams are contained in appendix D to this plan and in Marine Corps Technical Manual 2000-15/2 Principal Technical Characteristics of U.S. Marine Corps Communication-Electronic Equipment.

THIS PAGE INTENTIONALLY LEFT BLANK

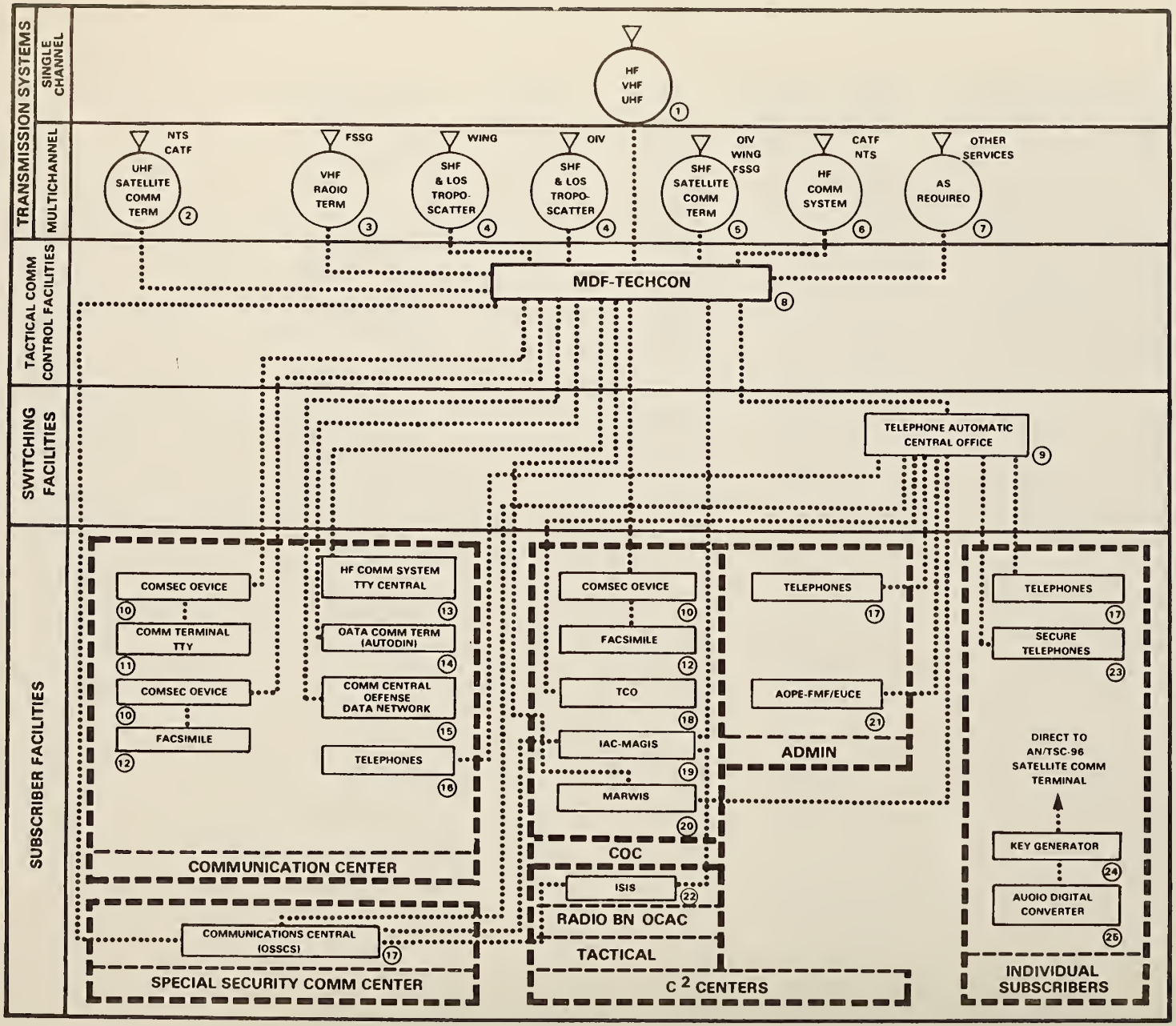

Figure 5-1. Marine Amphibious Force Headquarters Node, Present-1991

Systems/Equipment in Use and Projected Replacements Present-1991

Single Channel Radios

1. HF: Radio Terminal Set AN/MRC-138.
   Radio Set AN/PRC-104.
   VHF: Radio Set AN/PRC-77.
   Radio Set AN/VRC-12.
   UHF: Radio Terminal Set AN/MRC-138 (UHF).

Multichannel Radios

2. UHF: Satellite Communications Central AN/TSC-96A
3. VHF: Radio Terminal Set AN/MRC-135.
4. SHF: Radio Set AN/GRC-201
5. SHF: Ground Mobile Forces Communications Terminal AN/TSC-93A.
6. HF: Communications System AN/TSC-95. The AN/TSC-120 High Frequency Communication Central will start replacing the AN/TSC-95 in 1991.
7. Systems as required to communicate with other Services/allies.

Other Systems/Equipment

8. Main Distribution Frame/Communications Technical Control Center AN/TSQ-84.
9. Central Office, Telephone, Automatic AN/TTC-38(V) will be replaced by the Automatic Telephone Central Office, AN/TTC-42 (ULCS) during this period.
10. Dedicated Loop Encryption Device (DLED) TSEC/KG-84A/C.
11. Communications Terminal AN/UGC-74A(V)3.
12. Tactical Facsimile Set AN/GXC-7A. To be replaced by Tactical Facsimile Set AN/UXC-7 starting 1987.
13. Communications System AN/TSC-95 (AN/TGC-46). TGC-46 is teletypewriter central for TSC-95. The AN/TGC-46 may be replaced by Communication Central AN/MSC-63A starting 1990.

Other Systems/Equipment (Cont'd)

14. Data Communications Terminal AN/TYC-5A(V). When fielded, the AN/MSC-63A will take over these functions.
15. Communications Central AN/TGC-37(V). To be replaced by AN/MSC-63A Communications Central starting 1990.
16. Telephone Set TA-838( )/TT and Telephone Set TA-938/G. With the phasing into service of the ULCS, the Digital Nonsecure Voice Terminal (DNVT), TA-954 will replace the TA-838 and TA 938.
17. Communications Central AN/MSC-63. To be replaced by Communications Central AN/MSC-63A starting 1988.
18. Tactical Combat Operations (TCO) System. IOC 1990.
19. Intelligence Analysis Center AN/TYQ-19(V).
20. Marine Corps WWMCCS Information System (MARWIS) Terminal.
21. Automated Data Processing Equipment-Fleet Marine Force to be replaced by End Use Computing Equipment (EUCE) during this period.
22. Existing Radio Battalion SIGINT equipment. Integrated Signals Intelligence System (ISIS) to be fielding during this period.
23. PARKHILL Narrowband Security Equipment TSEC/KY-65 and Telephone Security Interface Unit (TSIU) used with TA-938/G. With the introduction of switches capable of servicing digital telephones, the Digital Subscriber Voice Terminal (DSVT), TSEC/KY-68 will also be used where secure telephones are required.
24. Key Generator TSEC/KG-36.
25. Audio Digital Converter CV-3333/U.

Figure 5-1. Marine Amphibious Force Headquarters Node, Present-1991

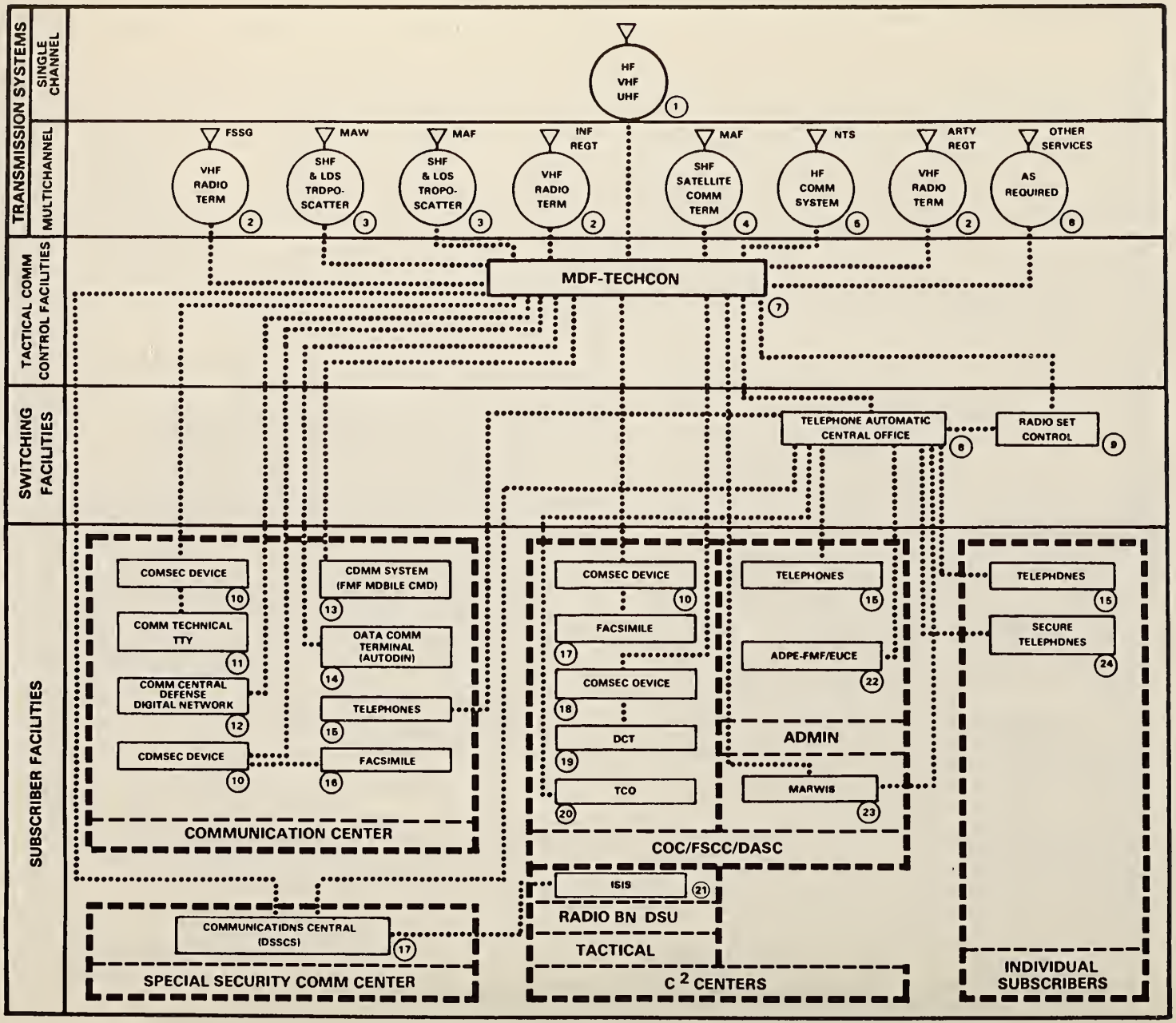

Figure 5-2. Marine Division Node Present-1991

Systems/Equipment in Use and Projected Replacements Present-1991

Single Channel Radios

1. HF: Radio Terminal Set AN/MRC-138.
   Radio Set AN/PRC-104.
   VHF: Radio Set AN/PRC-77.
   Radio Set AN/VRC-12.
   Radio Set AN/PRC-68.
   UHF: Radio Terminal Set AN/MRC-138(UHF).
   Radio Set AN/PRC-75. To be replaced by Radio Set AN/PRC-113 starting 1986.
   Manpack Satellite Terminal AN/PSC-3.

Multichannel Radios

2. VHF: Radio Terminal Set AN/MRC-135.
3. SHF: Radio Set AN/GRC-201.
4. SHF: Ground Mobile Forces Satellite Communications Terminal AN/TSC-93A. IOC 1986.
5. HF: Communications System AN/TSC-95. The AN/TSC-120 High Frequency Communication Central will start replacing the AN/TSC-95 in 1991.
6. Systems as required to communicate with other Services/allies.

Other Systems/Equipment

7. Main Distribution Frame/Communication Technical Control Center AN/TSQ-84( ).
8. Central Office, Telephone, Automatic AN/TTC-38(V) will be replaced by the Automatic Telephone Central Office, AN/TTC-42 (ULCS) during this period.
9. Control Radio Set C-6709/G will be replaced by the Secure Digital Net Radio Interface Unit (SDNRIU) TSES/KY-90 when the ULCS is placed in service.
10. Dedicated Loop Encryption Device (DLED) TSEC/KG-84A/C.
11. Communications Terminal AN/UGC-74A(V)3.
12. Communications Central AN/TGC-37(V). To be replaced by Communications Central AN/MSC-63A starting 1990.

Other Systems/Equipment (Cont'd)

13. Communications System AN/TSC-95 (AN/TGC-46). The TGC-46 is the teletypewriter central for the TSC-95. The AN/TGC-46 may be replaced by Communication Central AN/MSC-63A during this period.
14. Data Communications Terminal AN/TYC-5A(V). When fielded, the AN/MSC-63A will take over these functions.
15. Telephone Set TA-838( )/TT and Telephone Set TA-938/G. With the phasing in to service of the ULCS, the Digital Nonsecure Voice Terminal (DNVT), TA-954 will replace the TA-838 and TA-938.
16. Tactical Facsimile Set AN/GXC-7A. Replaced by Tactical Facsimile Set AN/UXC-7 starting 1987.
17. Communications Central AN/MSC-63 to be replaced by Communications Central AN/MSC-63A starting 1988.
18. VINSON Security Equipment TSEC/KY-57.
19. Digital Communications Terminal (DCT) AN/PSC-2.
20. Tactical Combat Operations (TCO) System. IOC 1990.
21. Existing Radio Battalion SIGINT equipment. Integrated Signals Intelligence System to be fielded during period.
22. Automated Data Processing Equipment-Fleet Marine Force will be replaced by End Use Computing Equipment (EUCE) during period.
23. Marine Corps WWMCCS Information System (MARWIS) Terminal
24. PARKHILL Narrowband Security Equipment TSEC/KY-65 and Telephone Security Interface Unit (TSIU) used with Telephone TA-938/G. With the introduction of switches capable of servicing digital telephones, the Digital Subscriber Voice Terminal (DSVT), TSEC/KY-68 will also be used where secure telephones are required.

Figure 5-2. Marine Division Node Present-1991

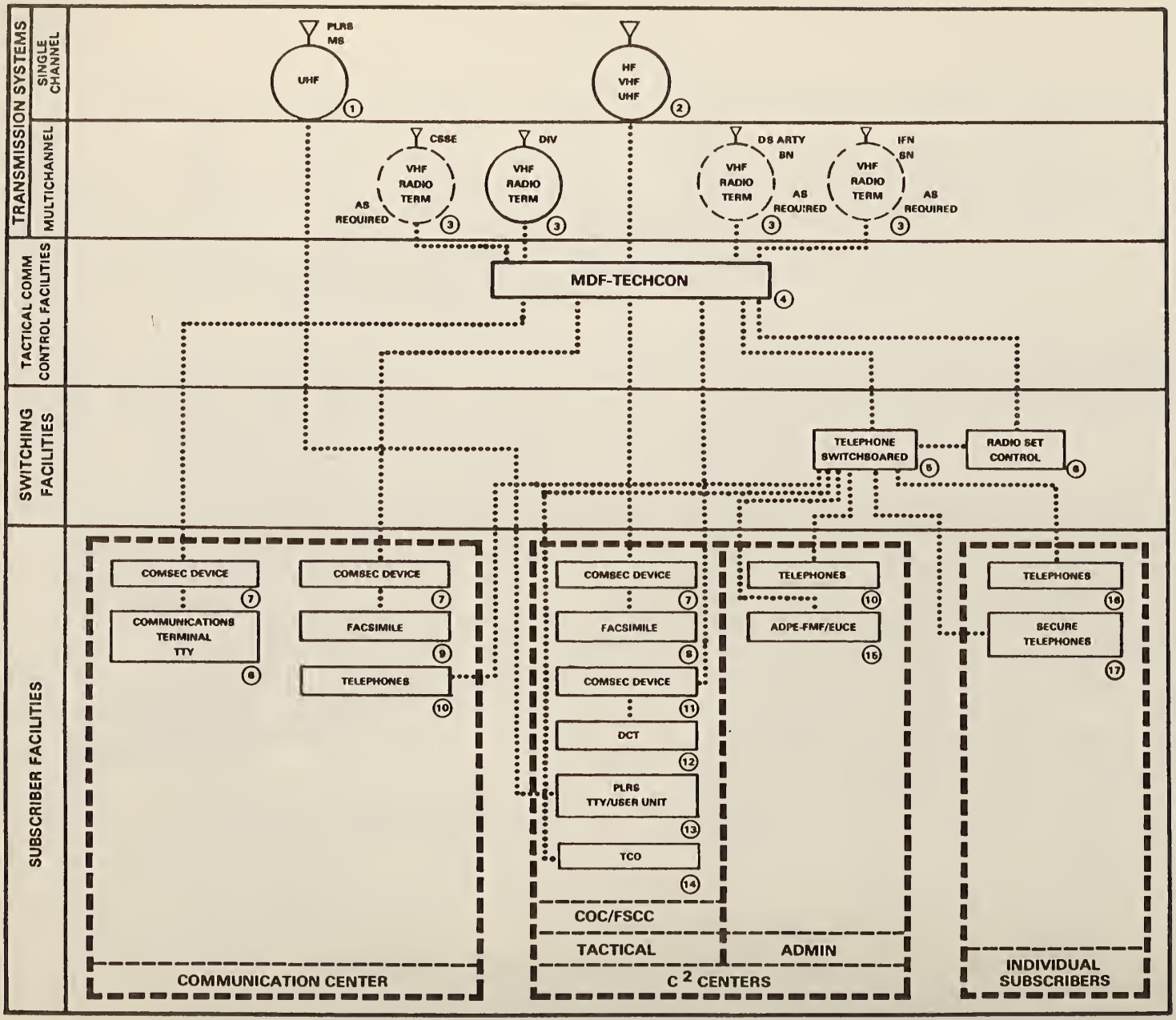

Figure 5-3. Infantry Regiment Headquarters Node, Present-1991

Systems/Equipment in Use and Projected Replacements Present-1991

Single Channel Radios

1. UHF: Master Station, Position Location Reporting System (PLRS) AN/TSQ-129.
2. HF: Radio Terminal Set AN/MRC-138.
   Radio Set AN/PRC-104.
   VHF: Radio Set AN/PRC-77.
   Radio Set AN/VRC-12.
   Radio Set AN/PRC-68.
   UHF: Radio Set AN/MRC-138(UHF).

Multichannel Radios

3. VHF: Radio Terminal Set AN/MRC-135.

Other Systems/Equipment

4. Main Distribution Frame-Technical Control.
5. Switchboard, Telephone SB-3614()/TT to be replaced by Automatic Digital Switchboard, SB-3865(P)/-TTC (ULCS) during this period.
6. Control Radio Set C-6709/G will be replaced by the Secure Digital Net Radio Interface Unit (SDNRIU), TSEC/KY-90 when the ULCS is placed in service.
7. Dedicated Loop Encryption Device (DLED) TSEC/KG-84A/C.
8. Communications Terminal AN/UGC-74A(V)3.

Other Systems/Equipment (Cont'd)

9. Tactical Facsimile Set AN/GXC-7A. To be replaced by Tactical Facsimile Set AN/UXC-7 starting 1987.
10. Telephone Set TA-838 ()/TT. With the phasing into service of the ULCS the Digital Nonsecure Voice Terminal (DNVT), TA-954 will replace the TA-838 and TA-312 telephones.
11. VINSON Security Equipment TSEC/KY-57.
12. Digital Communications Terminal (DCT) AN/PSC-2.
13. Radio Set, Manpack, PLRS AN/PSQ-4//Radio Set Vehicle, PLRS AN/VSQ-1//Communications Terminal AN/UGC-74A (V)3.
14. Tactical Combat Operations (TCO) System. IOC 1990.
15. Automated Data Processing Equipment-Fleet Marine Force (ADPE-FMF) to be replaced by End Use Computing Equipment (EUCE) during this period.
16. Telephone Set TA-312/PT and Telephone Set TA-838()/TT see item 10 above.
17. PARKHILL Narrowband Security Equipment TSEC/KY-65 and Telephone Security Interface Unit (TSIU) used with Telephone TA-312/PT. With the introduction of switches capable of servicing digital telephones, the Digital Subscriber Voice Terminal (DSVT), TSEC/KY-68 will replace PARKHILL at the infantry regiment.

Figure 5-3. Infantry Regiment Headquarters Node, Present-1991 (con't)

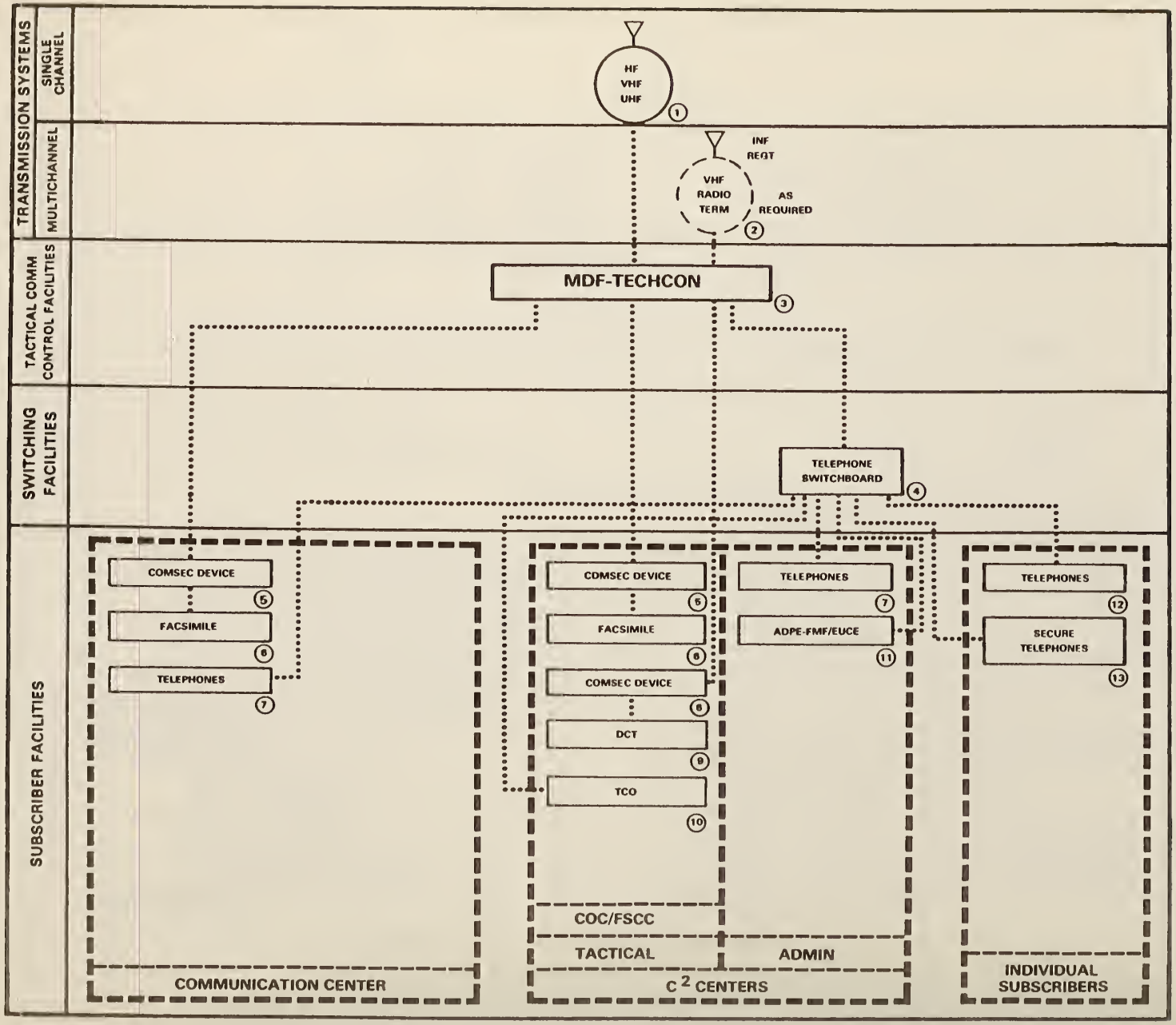

Figure 5-4. Infantry/Light Armored Vehicle Battalion Headquarters Node, Present-1991

Systems/Equipment in Use and Projected Replacements Present-1991

Single Channel Radios

1. HF: Radio Terminal Set AN/MRC-138.
   Radio Set AN/PRC-104.
   VHF: Radio Set AN/PRC-68.
   Radio Set AN/PRC-77.
   Radio Set AN/VRC-12.
   UHF: Radio Terminal Set AN/MRC-138(UHF).
   Radio Set AN/PRC-75. Replaced by Radio Set AN/PRC-113 starting 1986.

Multichannel Radios

2. VHF: Radio Terminal Set AN/MRC-135.

Other Systems/Equipment

3. Main Distribution Frame-Technical Control.

Other Systems/Equipment (Cont'd)

4. Switchboard, Telephone SB-3614()/TT.
5. Dedicated Loop Encryption Device (DLED) TSEC/KG-84A/C.
6. Tactical Facsimile Set AN/GXC-7A. To be replaced by Tactical Facsimile Set AN/UXC-7 starting 1987.
7. Telephone Set TA-838 ()/TT.
8. VINSON Security Equipment TSEC/KY-57.
9. Digital Communications Terminal (DCT) AN/PSC-2.
10. Tactical Combat Operations (TCO) System. IOC 1990.
11. Automated Data Processing Equipment-Fleet Marine Force (ADPE-FMF). To be replaced by End Use Computing Equipment (EUCE) during this period.
12. Telephone Set TA-312/PT and Telephone Set TA-838()/TT.
13. PARKHILL Narrowband Security Equipment TSEC/KY-65 used with TA-838()/TT and Telephone Security Interface Unit (TSIU).

Figure 5-4. Infantry/Light Armored Vehicle Battalion Headquarters Node, Present-1991 (con't)

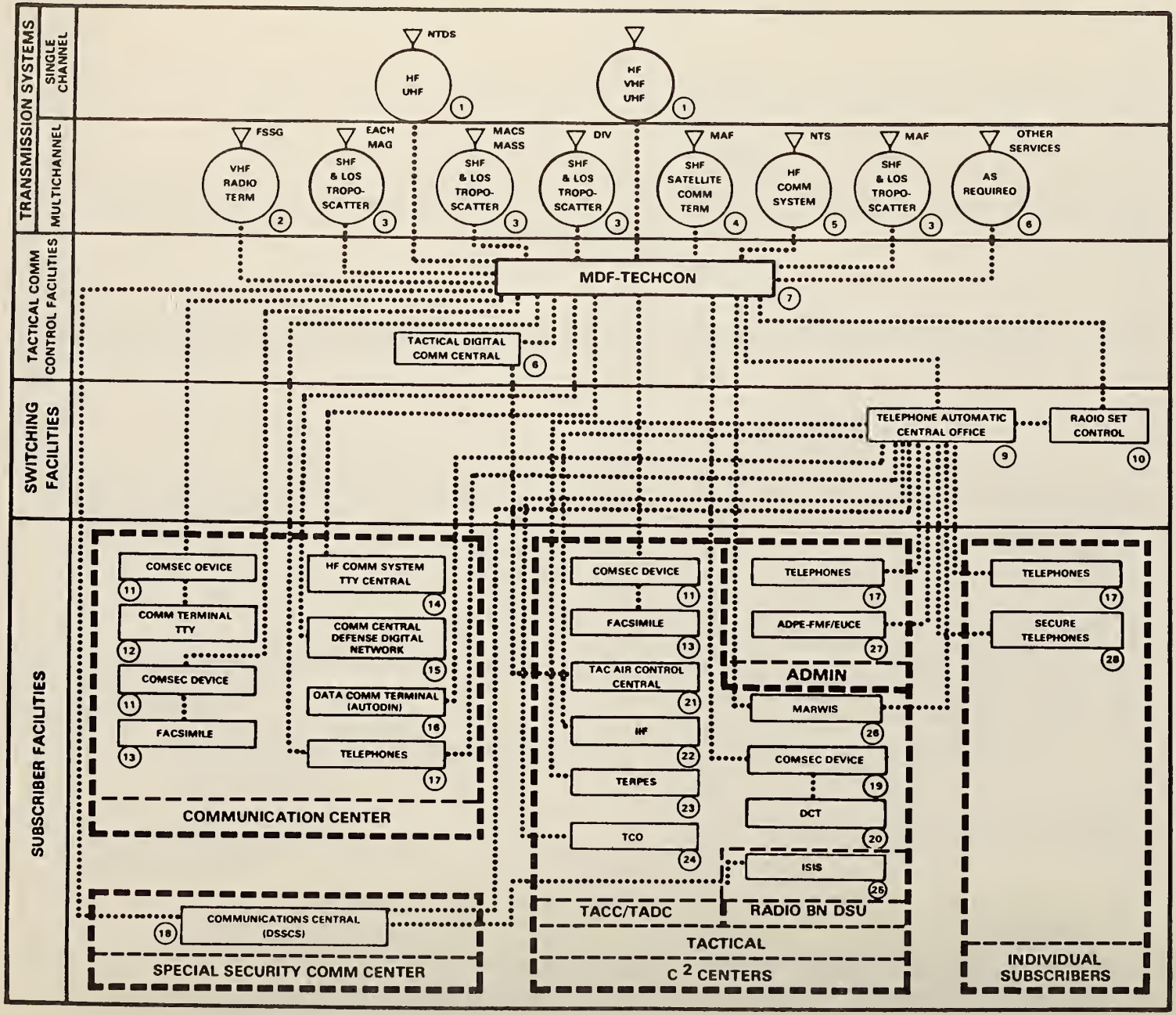

Figure 5-5. Marine Aircraft Wing Headquarters Node, Present-1991

Systems/Equipment in Use and Projected Replacements Present-1991

Single Channel Radios

1. HF: Radio Terminal Set AN/MRC-138.
   Radio Set AN/PRC-104.
   Radio Set AN/GRC-193.
   Radio Set AN/URC-97.
   VHF: Radio Set AN/PRC-77.
   Radio Set AN/VRC-12.
   UHF: Radio Terminal Set AN/MRC-138(UHF).
   Radio Set AN/PRC-75. To be replaced by Radio Set AN/PRC-113 starting 1986.
   Radio Terminal Set AN/GRC-171A(V)2.

Multichannel Radios

2. VHF: Radio Terminal Set AN/MRC-135.
3. SHF: Radio Set AN/GRC-201
4. SHF: Ground Mobile Forces Communications Terminal AN/TSC-93A.
5. HF: Communications System AN/TSC-95. The AN/TCS-120 High Frequency Communication Central will start replacing the AN/TSC-95 in 1991.
6. Systems as required to communicate with other Services/allies.

Other Systems/Equipment

7. Main Distribution Frame/Communications Technical Control Center AN/TSQ-84.
8. Tactical Data Communications Central AN/TYQ-3A. Replaced by Tactical Air Operations Module (TAOM) starting 1990.
9. Central Office, Telephone, Automatic AN/TTC-38(V), to be replaced by Automatic Telephone Central Office, AN/TTC-42 (ULCS) during this period.
10. Control, Radio Set C-6709/G will be replaced by the Secure Digital Net Radio Interface Unit (SDNRIU), TSEC/KY-90 when the ULCS is placed in service.
11. Dedicated Loop Encryption Device (DLED) TSEC/KG-84A/C.
12. Communications Terminal AN/UGC-74A(V)3.
13. Tactical Facsimile Set AN/GXC-7A. To be replaced by Tactical Facsimile Set AN/UXC-7 starting 1987.

Other Systems/Equipment (Cont'd)

14. Communications System AN/TSC-95 (AN/TGC-46). The TGC-46 is teletypewriter central for the TSC-95. The AN/TGC-46 may be replaced by Communication Central AN/MSC-63A during this period.
15. Communications Terminal AN/TGC-37(V). To be replaced by Communications Central AN/MSC-63A starting 1990.
16. Data Communications Terminal AN/TYC-5A(V). When fielded, the AN/MSC-63A will take over these functions.
17. Telephone Set TA-838()/TT and Telephone Set TA-938. With the phasing into service of the ULCS, the Digital Nonsecure Voice Terminal (DNVT), TA-954 will replace the TA-838 and TA-938.
18. Communications Central AN/MSC-63. To be replaced by Communications Central AN/MSC-63A starting 1988.
19. VINSON Security Equipment TSEC/KY-57.
20. Digital Communications Terminal (DCT) AN/PSC-2.
21. Tactical Air Control Central AN/TYQ-1.
22. MAGIS Imagery Interpretation Facility AN/TYQ-12(V)2. To be replaced by Joint Source Imagery Processor (JSIP) starting 1991.
23. Tactical Electronic Reconnaissance Processing and Evaluation System (TERPES), AN/TSQ-90B.
24. Tactical Combat Operations (TCO) System. IOC 1990.
25. Existing radio battalion SIGINT equipment. Integrated Signals Intelligence System to be fielded during period.
26. Marine Corps WWMCCS Information System (MARWIS) Terminal.
27. Automated Data Processing Equipment-Fleet Marine Force (ADPE-FMF). To be replaced by End Use Computing Equipment (EUCE) during period.
28. PARKHILL Narrowband Security Equipment TSEC/KY-65 and Telephone Security Interface Unit (TSIU) used with TA-938/G to be replaced by the Digital Subscriber Voice Terminal (DSVT), TSEC/KY-68 when the ULCS phases into use.

Figure 5-5. Marine Aircraft Wing Headquarters Node, Present-1991 (con't)

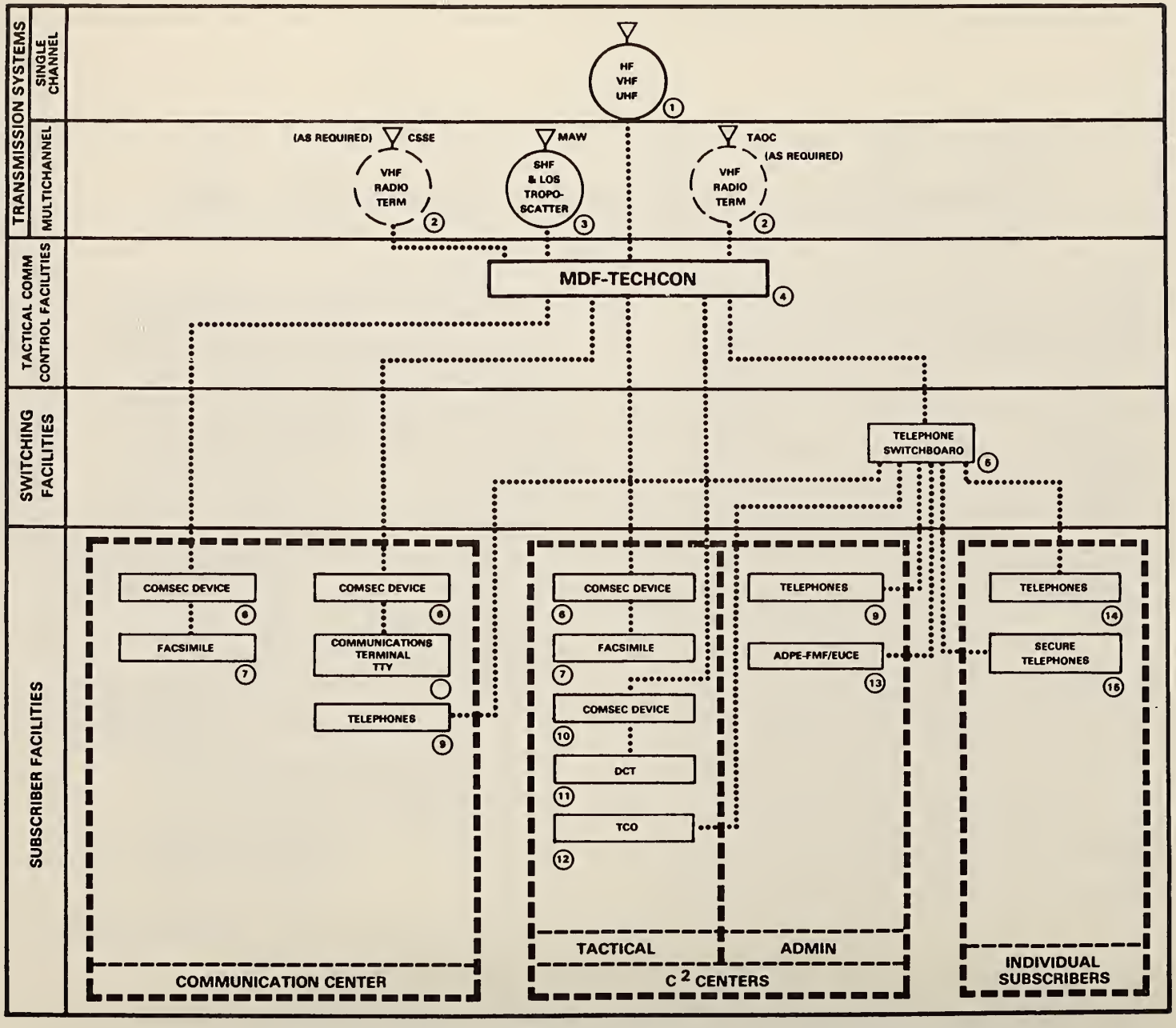

Figure 5-6. Marine Aircraft Group Headquarters Node, Present-1991

Systems/Equipment in Use and Projected Replacements Present-1991

Single Channel Radios

1. HF: Radio Terminal Set AN/MRC-138.
   Radio Set AN/PRC-104.
   Radio Set AN/GRC-193.
   VHF: Radio Set AN/PRC-77.
   Radio Set AN/VRC-12.
   UHF: Radio Terminal Set AN/MRC-138(UHF).
   Radio Set AN/PRC-75. To be replaced by Radio Set AN/PRC-113 starting 1986.
   Radio Terminal Set AN/GRC-171A(V)2.

Multichannel Radios

2. VHF: Radio Terminal Set AN/MRC-135.
3. SHF: Radio Set AN/GRC-201.
4. Main Distribution Frame-Technical Control.
5. Telephone Switchboard SB-3614()/TT to be replaced by Automatic Digital Switchboard, SB-3865 (P)/TTC (ULCS) during this period.
6. Dedicated Loop Encryption Device (DLED) TSEC/KG-84A/C.
7. Tactical Facsimile Set AN/GXC-7A. To be replaced by Tactical Facsimile Set AN/UXC-7 starting 1987.

Other Systems/Equipment

8. Communications Terminal AN/UGC-74A(V)3.
9. Telephone Set TA-838()/TT and Telephone Set TA-938, to be replaced by the Digital Nonsecure Voice Terminal (DNVT), TA-954 when the SB-3865 is placed into service.
10. VINSON Security Equipment TSEC/KY-57.
11. Digital Communications Terminal (DCT) AN/PSC-2.
12. Tactical Combat Operations (TCO) System. IOC 1990.
13. Automated Data Processing Equipment-Fleet Marine Force (ADPE-FMF). To be replaced by End Use Computing Equipment (EUCE) during this period.
14. Telephone Set TA-312/PT and Telephone Set TA-838()/TT to be replaced by the DNVT TA-954 or the Digital Subscriber Voice Terminal (DSVT), TSEC/KY-68 when the ULCS is placed in service.
15. PARKHILL Narrowband Security Equipment TSEC/KY-65 and Telephone Security Interface Unit (TSIU) used with TA-838()/TT. To be replaced by the DSVT TSEC/KY-68 when the ULCS is placed in service.

Figure 5-6. Marine Aircraft Group Headquarters Node, Present-1991 (con't)

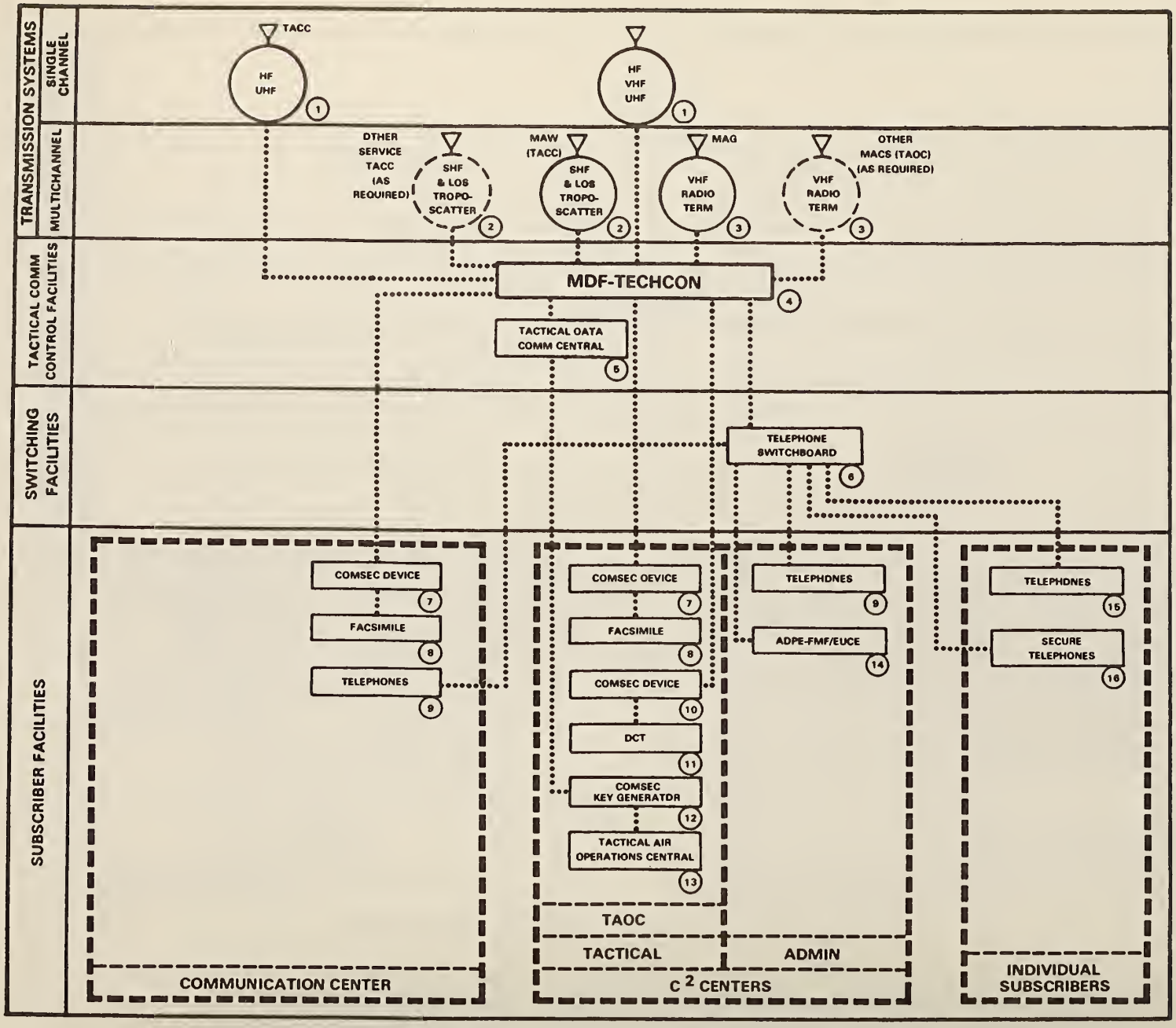

Figure 5-7. Marine Air Control Squadron Node, Present-1991

Systems/Equipment in Use and Projected Replacements Present-1991

Single Channel Radios

1. HF: Radio Terminal Set AN/MRC-138.
   Radio Set AN/PRC-104.
   Radio Set AN/GRC-193.
   Radio Set AN/URC-97(V)2.
   VHF: Radio Set AN/PRC-77.
   Radio Set AN/VRC-12.
   UHF: Radio Terminal Set AN/MRC-138(UHF).
   Radio Set AN/PRC-75. To be replaced by Radio Set AN/PRC-113 starting 1986.
   Radio Terminal Set AN/GRC-171A(V)2
   Receiver-Transmitter, Radio RT-1272A/GRC-171(V)

Multichannel Radios

2. SHF: Radio Set AN/GRC-201.
3. VHF: Radio Terminal Set AN/MRC-135.

Other Systems/Equipment

4. Main Distribution Frame-Technical Control.
5. Tactical Data Communications Central AN/TYQ-3A. To be replaced by the Tactical Air Operations Module (TAOM) AN/TYQ-23 starting 1990.
6. Telephone, Switchboard SB-3614()/TT to be replaced by Automatic Digital Switchboard SB-3865 (P)/TTC (ULCS) during this period.
7. Dedicated Loop Encryption Device (DLED) TSEC/KG-84A/C.

Other Systems/Equipment (Cont'd)

8. Tactical Facsimile Set AN/GXC-7A. To be replaced by Tactical Facsimile Set AN/UXC-7 starting 1987.
9. Telephone Set TA-838()/TT. To be replaced by the Digital Nonsecure Voice Terminal DNVT, TA-954 when the ULCS is placed in service.
10. VINSON Security Equipment TSEC/KY-57.
11. Digital Communications Terminal (DCT) AN/PSC-2.
12. Key Generator TSEC/KY-40. Capability incorporated into the Digital Communications Unit of the AN/TYQ-23.
13. Tactical Air Operations Central AN/TYQ-2. To be replaced by TAOM, AN/TYQ-23 starting 1990.
14. Automated Data Processing Equipment-Fleet Marine Force (ADPE-FMF). To be replaced by End Use Computing Equipment (EUCE) during this period.
15. Telephone Set TA-312/PT and Telephone Set TA-838()/TT. To be replaced by the Digital Nonsecure Voice Terminal (DNVT), TA-954 and the Digital Subscriber Voice Terminal (DSVT) TSEC/KY-68 when the ULCS is placed in service.
16. PARKHILL Narrowband Security Equipment TSEC/KY-65 and Telephone Security Interface Unit (TSIU) used with TA-838()/TT. To be replaced by the DSVT, TSEC/KY-68 when the ULCS is placed in service.

Figure 5-7. Marine Air Control Squadron Node, Present-1991 (con't)

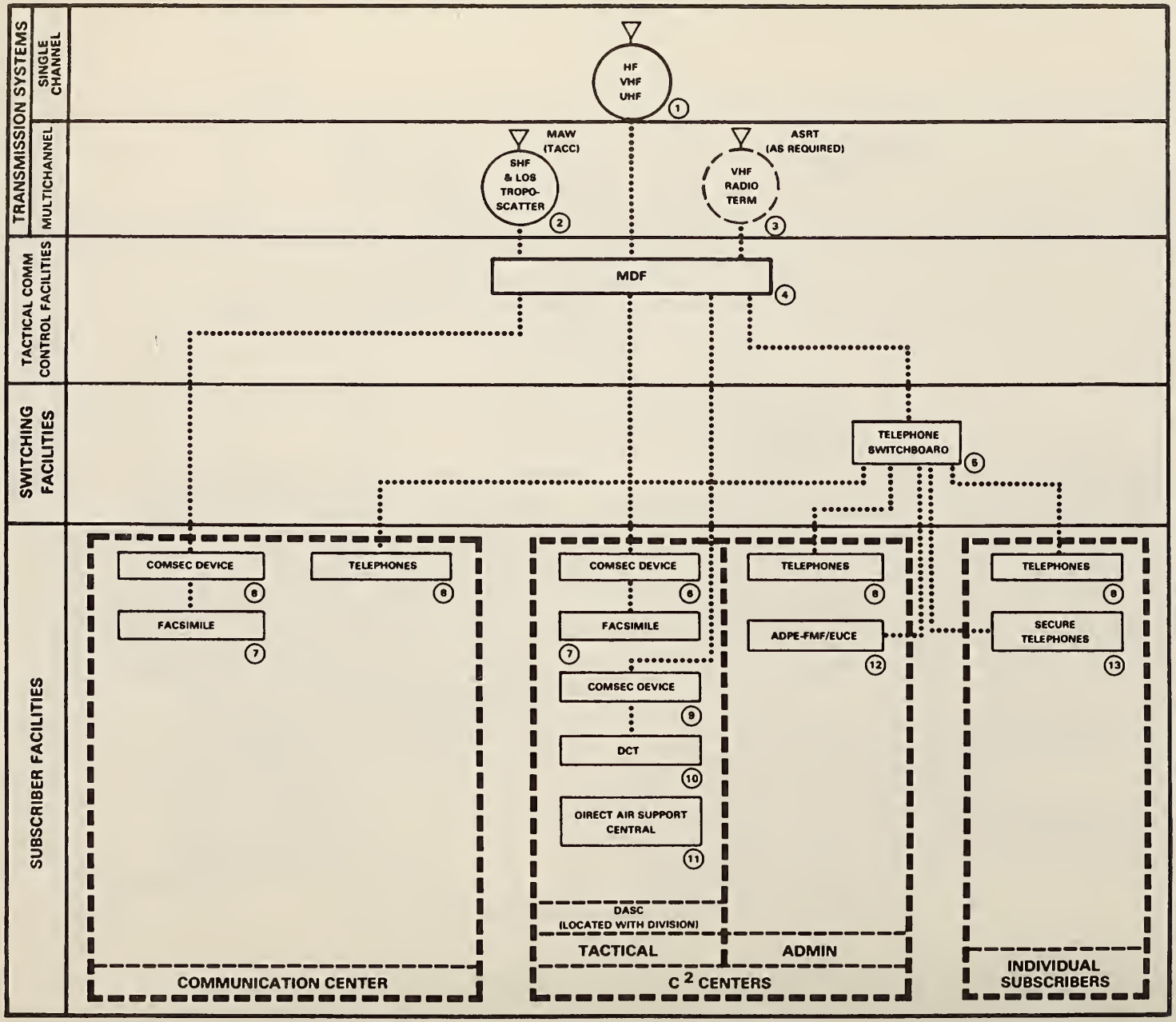

Figure 5-8. Marine Air Support Squadron Node, Present-1991

Systems/Equipment in Use and Projected Replacements Present-1991

Single Channel Radios

1. HF: Radio Terminal Set AN/MRC-138.
   Radio Set AN/GRC-193.
   Radio Set AN/PRC-104.
   VHF: Radio Set AN/PRC-77.
   Radio Set AN/VRC-12.
   UHF: Radio Terminal Set AN/GRC-171A(V)2
   Radio Terminal Set AN/MRC-138(UHF).
   Radio Set AN/PRC-75. To be replaced by Radio Set AN/PRC-113 starting 1986.

Multichannel Radios

2. SHF: Radio Set AN/GRC-201.
3. VHF: Radio Terminal Set AN/MRC-135.

Other Systems/Equipment

4. Main Distribution Frame-Technical Control.
5. Switchboard, Telephone SB-3416( )/TT, to be replaced by the Automatic Digital Switchboard SB-3865(P)/TTC (ULCS) during this period.
6. Dedicated Loop Encryption Device (DLED) TSEC/KG-84A/C.

Other Systems/Equipment (Cont'd)

7. Tactical Facsimile Set AN/GXC-7A. To be replaced by Tactical Facsimile Set AN/UXC-7 starting 1987.
8. Telephone Set TA-838( )/TT, to be replaced by the Digital Nonsecure Voice Terminal (DNVT) TA-954 when the ULCS is placed in service.
9. VINSON Security Equipment TSEC/KY-57.
10. Digital Communications Terminal (DCT) AN/PSC-2.
11. Airborne-Mobile Direct Air Support Central AN/UYQ-3A. The Improved Direct Air Support Central (IDASC) will be fielded during this period. The DASC is located with the headquarters of the GCE.
12. Automated Data Processing Equipment-Fleet Marine Force (ADPE-FMF). To be replaced by End Use Computing Equipment (EUCE) during this period.
13. PARKHILL Narrowband Security Equipment TSEC/KY-65 and Telephone Security Interface Unit (TSIU) used with Telephone Set TA-838( )/TT. To be replaced by the DSVT, TSEC/KY-68 when the ULCS is placed in service.

Figure 5-8. Marine Air Support Squadron Node, Present-1991 (con't)

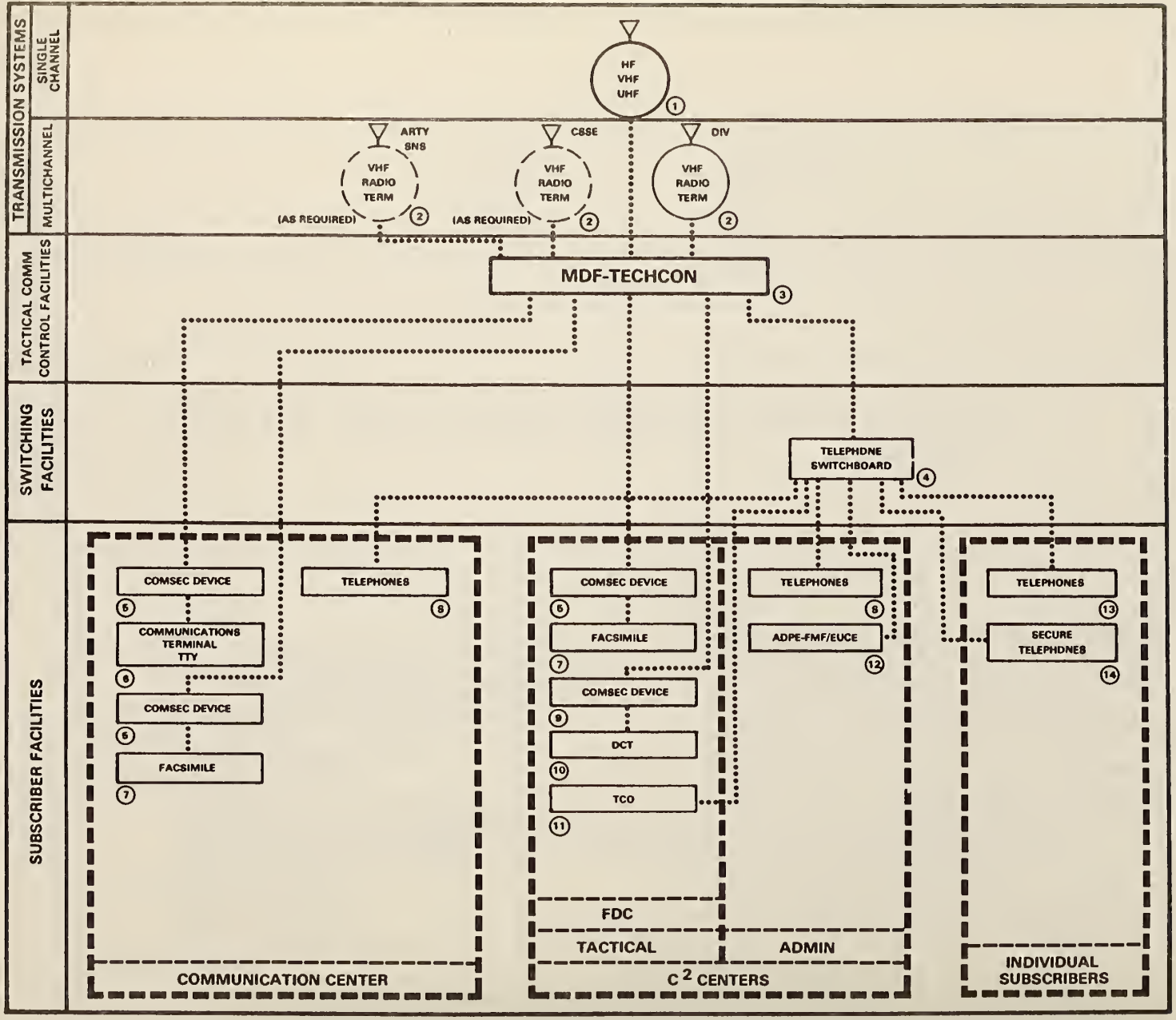

Figure 5-9. Artillery Regimental Headquarters Node, Present-1991

Systems/Equipment in Use and Projected Replacements Present-1991

Single Channel Radios

1. HF: Radio Terminal Set AN/MRC-138.
   Radio Set AN/PRC-104.
   VHF: Radio Set AN/PRC-68.
   Radio Set AN/PRC-77.
   Radio Set AN/VRC-12.
   UHF: Radio Terminal Set AN/MRC-138(UHF).
   Radio Set AN/PRC-75. To be replaced by Radio Set AN/PRC-113 starting 1986.
   Radio Set AN/VRC-83.

Multichannel Radios

2. VHF: Radio Terminal Set AN/MRC-135.

Other Systems/Equipment

3. Main Distribution Frame-Technical Control.
4. Switchboard, Telephone SB-3416()/TT, to be replaced by the Automatic Telephone Central Office, AN/TTC-42 (ULCS) during this period.
5. Dedicated Loop Encryption Device (DLED) TSEC/KG-84A/C.
6. Communications Terminal AN/UGC-74A(V)3.

Other Systems/Equipment (Cont'd)

7. Tactical Facsimile Set AN/GXC-7A. To be replaced by Tactical Facsimile Set AN/UXC-7 starting 1987.
8. Telephone Set TA-838()/TT, to be replaced by the Digital Nonsecure Voice Terminal (DNVT) TA-954 when the ULCS is placed in service.
9. VINSON Security Equipment TSEC/KY-57.
10. Digital Communications Terminal (DCT) AN/PSC-2.
11. Tactical Combat Operations (TCO) System. IOC 1990.
12. Automated Data Processing Equipment-Fleet Marine Force (ADPE-FMF). To be replaced by End Use Computing Equipment (EUCE) during this period.
13. Telephone Set TA-312/PT and Telephone Set TA-838()/TT. To be replaced by the DNVT, TA 954 and the Digital Subscriber Voice Terminal (DSVT), TSEC/KY-68 when the ULCS is placed in service.
14. PARKHILL Narrowband Security Equipment TSEC/KY-65 and Telephone Security Interface Unit (TSIU) used with TA-838()/TT. To be replaced by the Digital Subscriber Voice Terminal (DSVT), TSEC/KY-68 when the ULCS is placed in service.

NOTE: This figure does not include communication equipment required if the command post of the artillery regiment is to function as the alternate division command post.

Figure 5-9. Artillery Regimental Headquarters Node, Present-1991 (con't)

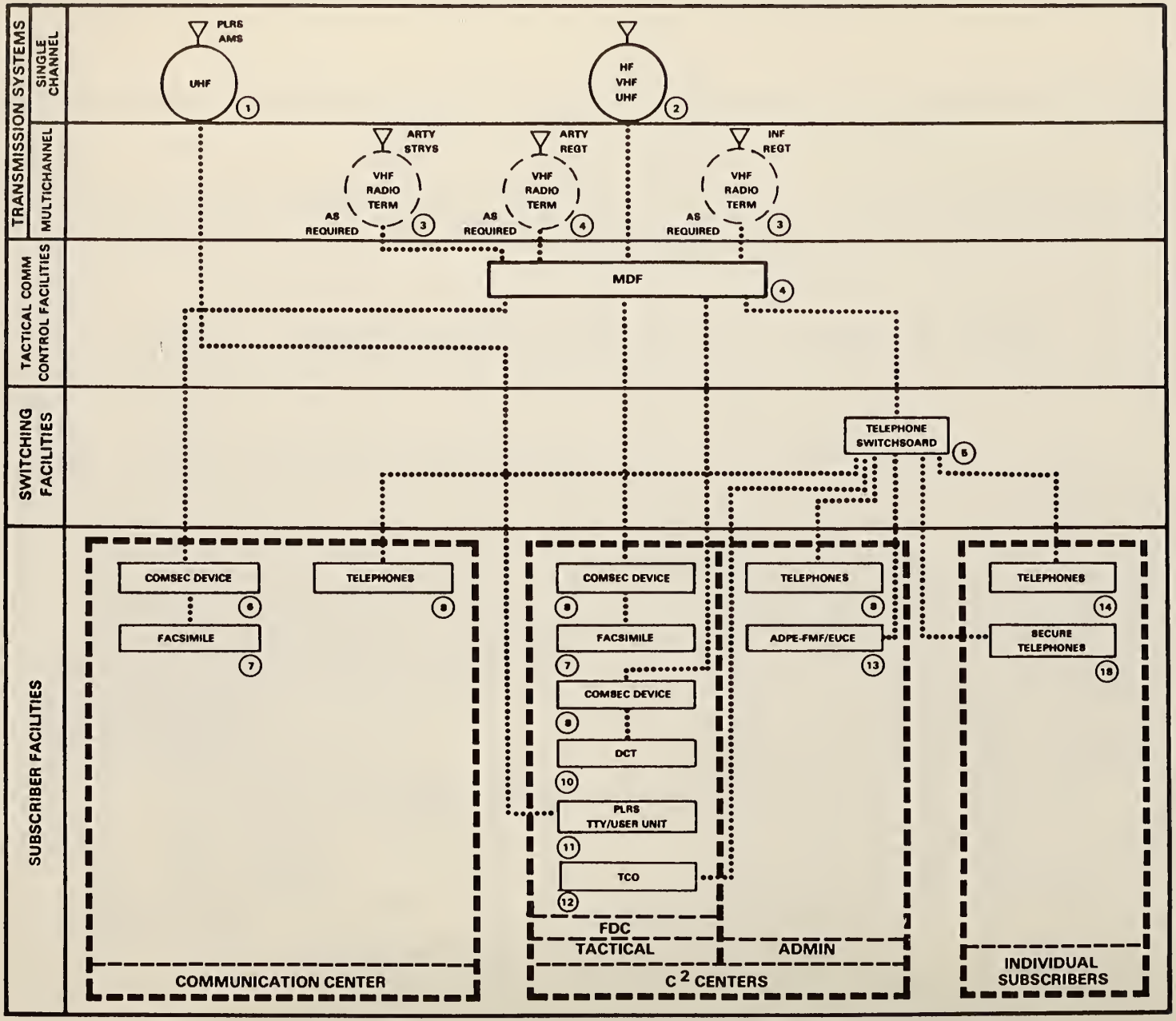

Figure 5-10. Artillery Battalion Headquarters Node, Present-1991

Systems/Equipment in Use and Projected Replacements Present-1991

Single Channel Radios

1. HF: Radio Terminal Set AN/MRC-138.
   Radio Set AN/PRC-104.
   VHF: Radio Set AN/PRC-68.
   Radio Set AN/PRC-77.
   Radio Set AN/VRC-12.
   UHF: Radio Set AN/PRC-75. To be replaced by Radio Set AN/PRC-113 starting 1986.
   Radio Set AN/VRC-83.
2. UHF: Radio Station, Position Location Reporting System (PLRS) AN/TSQ-129. Alternate Master Station. IOC 1986. Direct support battalions only.

Multichannel Radios

3. VHF: Radio Terminal Set AN/MRC-135.

Other Systems/Equipment

4. Main Distribution Frame-Technical Control.
5. Switchboard, Telephone SB-3614()/TT, to be replaced by Automatic Digital Switchboard, SB-3865 (P)/TTC (ULCS) during this period.
6. Dedicated Loop Encryption Device (DLED) TSEC/KG-84A/C.
7. Tactical Facsimile Set AN/GXC-7A. To be replaced by Tactical Facsimile Set AN/UXC-7 starting 1987.

Other Systems/Equipment (Cont'd)

8. Telephone Set TA-838()/TT, to be replaced by the Digital Nonsecure Voice Terminal (DNVT), TA-954 when the ULCS is placed in service.
9. VINSON Security Equipment TSEC/KY-57.
10. Digital Communications Terminal (DCT) AN/PSC-2.
11. Radio Set, Manpack, PLRS AN/PSQ-4//Radio Set, Vehicle, PLRS AN/VSQ-1//Communications Terminal AN/UGC-74A(V)3, starting 1986.
12. Tactical Combat Operations (TCO) System. IOC 1990.
13. Automated Data Processing Equipment-Fleet Marine Force (ADPE-FMF). To be replaced by End Use Computing Equipment (EUCE) during this period.
14. Telephone Set TA-312/PT and Telephone Set TA-838()/TT to be replaced by the DNVT, TA-954 and the Digital Subscriber Voice Terminal (DSVT), TSEC/KY-68 when the ULCS is placed in service.
15. PARKHILL Narrowband Security Equipment TSEC/KY-65 and Telephone Security Interface Unit (TSIU) used with Telephone Set TA-838()/TT. To be replaced by the DSVT, TSEC/KY-68 when the ULCS is placed in service.

Figure 5-10. Artillery Battalion Headquarters Node, Present-1991 (con't)

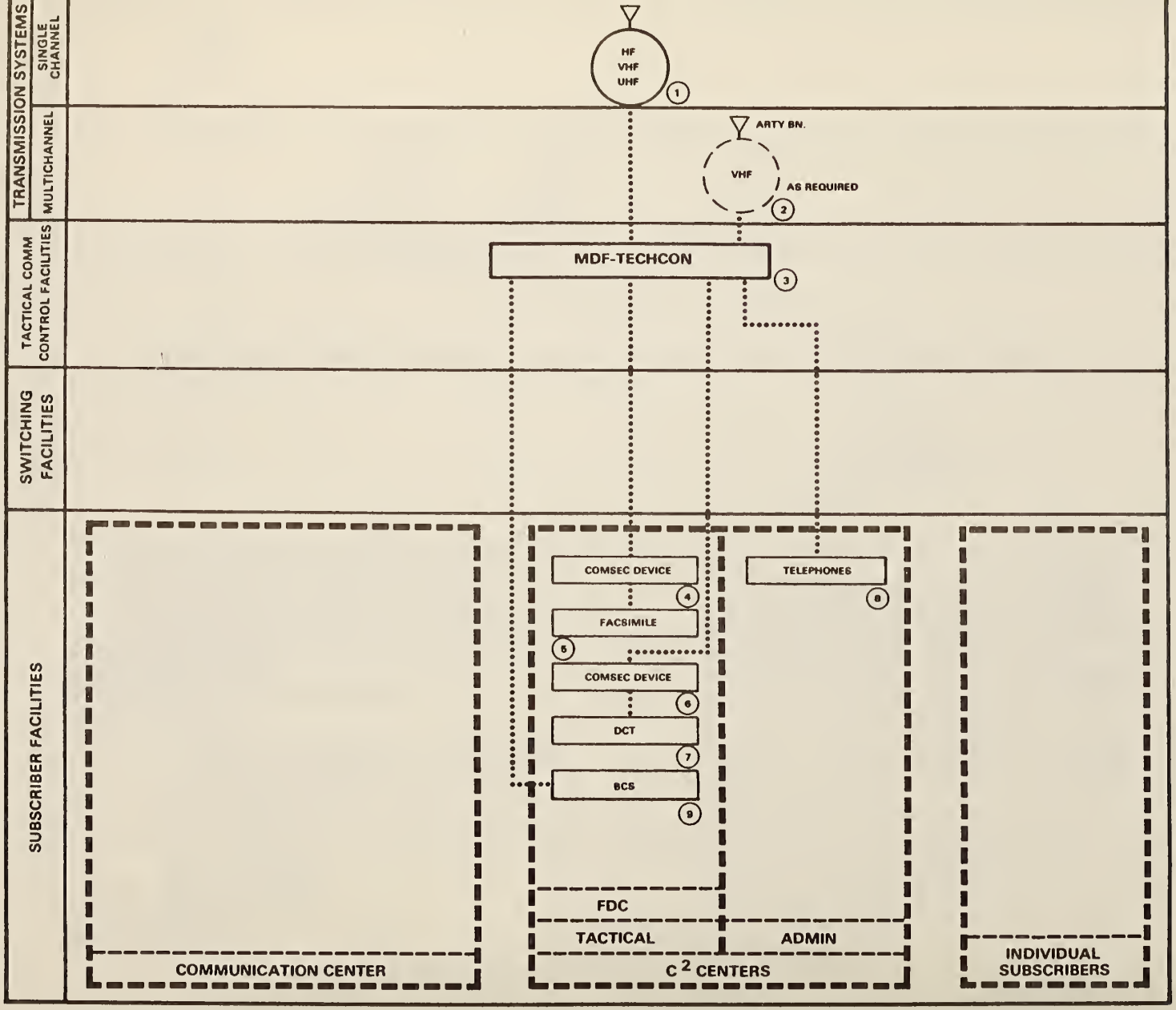

Figure 5-11. Artillery Battery Node, Present-1991

Systems/Equipment in Use and Projected Replacements Present-1991

Single Channel Radios

1. HF: Radio Terminal Set AN/MRC-138.
   Radio Set AN/PRC-104.
   VHF: Radio Set AN/PRC-68.
   Radio Set AN/PRC-77.
   Radio Set AN/VRC-12.
   UHF: Radio Terminal Set AN/MRC-138(UHF).
   Radio Set AN/PRC-75. To be replaced with Radio Set AN/PRC-113 starting 1986.
   Radio Set AN/VRC-83.

Multichannel Radios

2. VHF: Radio Terminal Set AN/MRC-135 (as required)

Other Systems/Equipment

3. Main Distribution Frame-Technical Control.
4. Tactical Facsimile Set AN/GXC-7A. To be replaced by Tactical Facsimile Set AN/UXC-7 starting 1987.
5. VINSON Security Equipment TSEC/KY-57.
6. Digital Communications Terminal (DCT) AN/PSC-2.
7. Battery Computer System AN/GYK-29 will be introduced starting in 1988.
8. Telephone Set TA-838()/TT.

Figure 5-11. Artillery Battery Node, Present-1991 (con't)

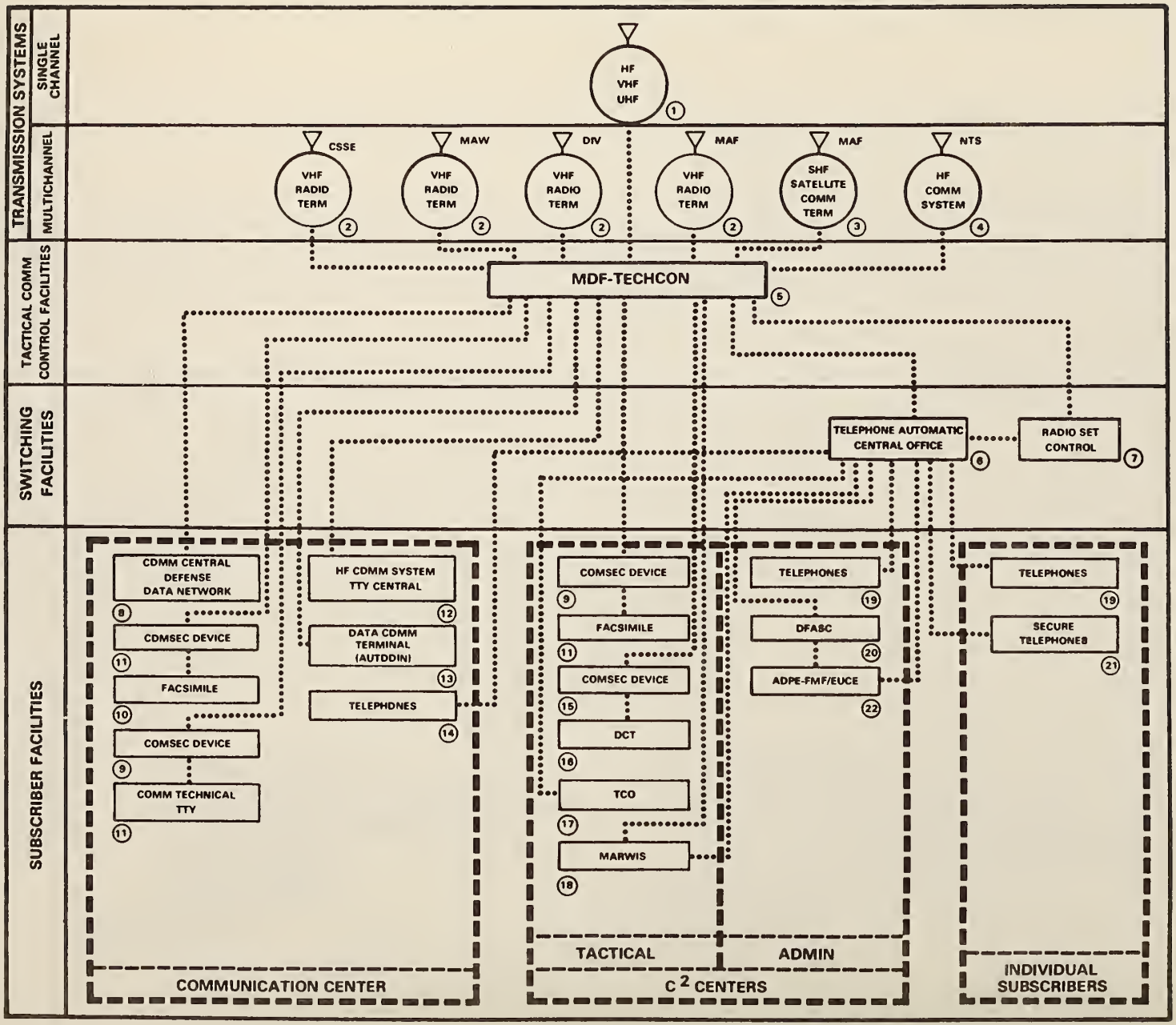

Figure 5-12. Force Service Support Group Headquarters Node, Present-1991

Systems/Equipment in Use and Projected Replacements Present-1991

Single Channel Radios

1. HF: Radio Terminal Set AN/MRC-138.
   Radio Set AN/PRC-104.
   VHF: Radio Set AN/PRC-68.
   Radio Set AN/PRC-77.
   Radio Set AN/VRC-12.
   UHF: Radio Set AN/PRC-75. To be replaced with Radio Set AN/PRC-113 starting 1986.
   Radio Set AN/VRC-83.

Multichannel Radios

2. VHF: Radio Terminal Set AN/MRC-135.
3. SHF: Ground Mobile Forces Satellite Communications Terminal AN/TSC-93A.
4. HF: Communications system AN/TSC-95. May be replaced by the High Frequency Communications Terminal (HFCT) AN/TSC-120 during period.

Other Systems/Equipment

5. Main Distribution Frame/Communication Technical Control Center AN/TSQ-84.
6. Central Office, Telephone, Automatic AN/TTC-38(V) to be replaced by the Automatic Telephone Central Office, AN/TTC-42 (ULCS) during this period.
7. Control, Radio Set C-6709/G. The Secure Digital Net Radio Interface Unit (SDNRIU), TSEC/KY-90 is used with the AN/TTC-42 and will replace the C-6709/G when the ULCS is placed in service.
8. Communications Central AN/TGC-37(v). To be replaced by Communications Central AN/MSC-63A starting 1991.
9. Dedicated Loop Encryption Device (DLED) TSEC/KG-84A/C.

Other Systems/Equipment (Cont'd)

10. Tactical Facsimile Set AN/GXC-7A. To be replaced by Tactical Facsimile Set AN/UXC-7 starting 1987.
11. Communications Terminal AN/UGC-74A(V)3.
12. Communications System AN/TSC-95 (AN/TGC-46). The TGC-46 is the teletypewriter central for the TSC-95. The AN/TGC-46 may be replaced by Communication Central AN/MSC-63A during this period.
13. Data Communications Terminal AN/TYC-5A(V). When fielded, the AN/MSC-63A will take over these functions.
14. Telephone Set TA-838()TT, to be replaced by the Digital Nonsecure Voice Terminal (DNVT), TA-954 when the ULCS is placed in service.
15. VINSON Security Equipment, TSEC/KY-57.
16. Digital Communications Terminal (DCT) AN/PSC-2.
17. Tactical Combat Operations (TCO) System. IOC 1990.
18. Marine Corps WWMCCS Information System (MARWIS) Terminal.
19. Telephone Set TA-838()/TT and Telephone Set TA-938/G, to be replaced by the DNVT, TA-954 and the Digital Subscriber Voice Terminal (DSVT), TSEC/KY-68 when the ULCS is placed in service.
20. Deployable Force Automated Services Center (DFASC).
21. PARKHILL Narrowband Security Equipment TSEC/KY-65 and Telephone Security Interface Unit (TSIU) used with Telephone TA-838()/TT. To be replaced by the DSVT, TSEC/KY-68 when the ULCS is placed in service.
22. Automated Data Processing Equipment-Fleet Marine Force (ADPE-FMF). To be replaced by the End Use Computing Equipment (EUCE) during this period.

Figure 5-12. Force Service Support Group Headquarters Node, Present-1991 (con't)

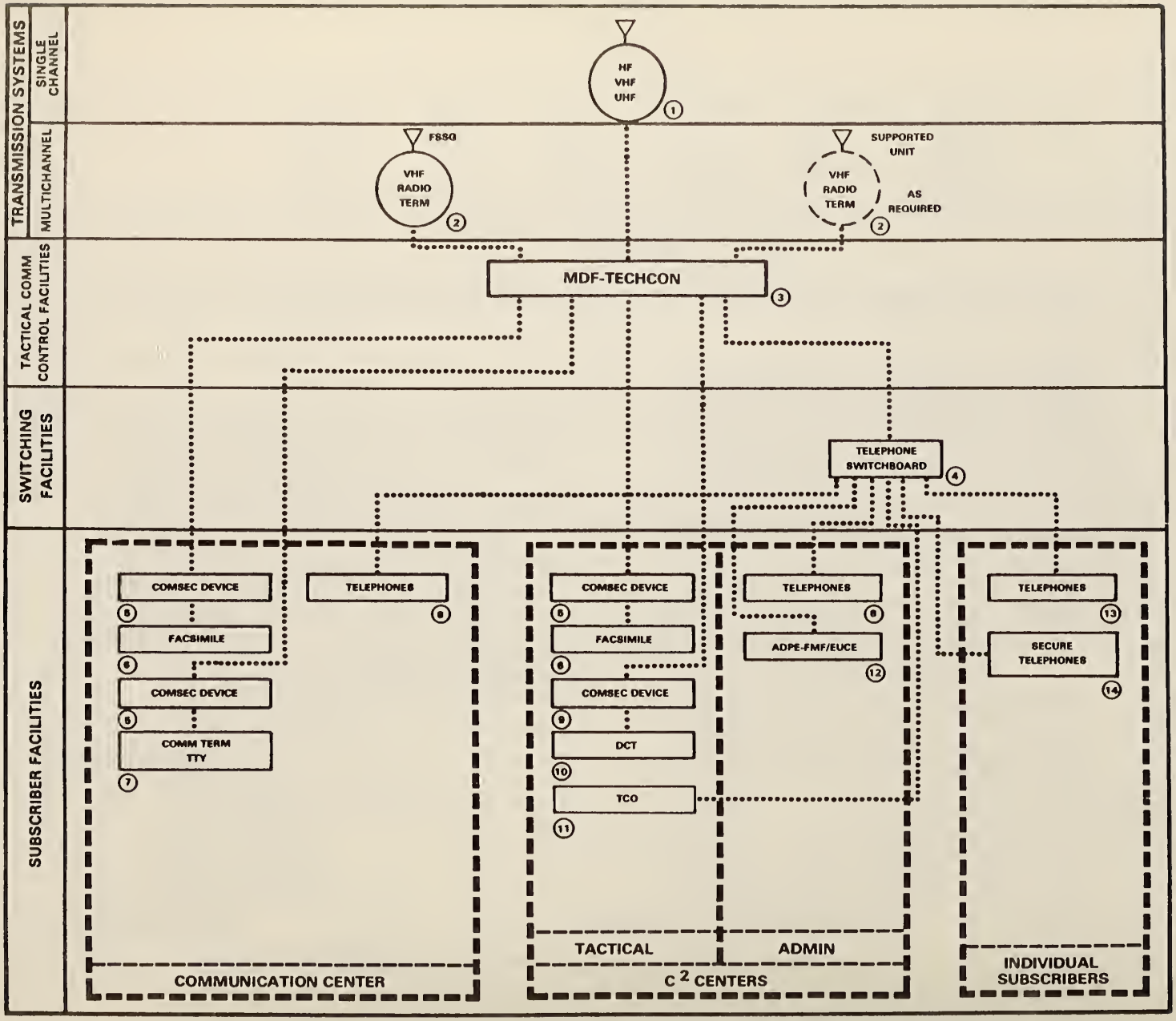

Figure 5-13. Combat Service Support Element Headquarters Node, Present-1991

Systems/Equipment in Use and Projected Replacements Present-1991

Single Channel Radios

1. HF: Radio Terminal Set AN/MRC-138.
   Radio Set AN/PRC-104.
   VHF: Radio Set AN/PRC-68.
   Radio Set AN/PRC-77.
   Radio Set AN/VRC-12.
   Secure Transceiver (BANCROFT) TSEC/KY-67.
   UHF: Radio Set AN/PRC-75. To be replaced with Radio Set AN/PRC-113 starting 1986.
   Radio Terminal Set AN/MRC-138(UHF).
   Radio Set AN/VRC-83.

Multichannel Radios

2. VHF: Radio Terminal Set AN/MRC-135.

Other Systems/Equipment

3. Main Distribution Frame-Technical Control.
4. Switchboard Telephone SB-3614, to be replaced by Automatic Digital Switchboard, SB-3865 (P)/TTC (ULCS) during this period.
5. Dedicated Loop Encryption Device (DLED) TSEC/KG-84A/C.
6. Tactical Facsimile Set AN/GXC-7A. To be replaced by Tactical Facsimile Set AN/UXC-7 starting 1987.

Other Systems/Equipment (Cont'd)

7. Communications Terminal AN/UGC-74A(V)3.
8. Telephone Set TA-838()TT, to be replaced by the Digital Nonsecure Voice Terminal (DNVT), TA-954 when the ULCS is placed in service.
9. VINSON Security Equipment, TSEC/KY-57.
10. Digital Communications Terminal (DCT) AN/PSC-2.
11. Tactical Combat Operations (TCO) System. IOC 1990.
12. Automated Data Processing Equipment-Fleet Marine Force (ADPE-FMF). To be replaced by End Use Computing Equipment (EUCE) during this period.
13. Telephone Set TA-312/PT and Telephone Set TA-838()/-TT, to be replaced by the DNVT, TA-954 and the Digital Subscriber Voice Terminal (DSVT), TSEC/-KY-68 when the ULCS is placed in service.
14. PARKHILL Narrowband Security Equipment TSEC/KY-65 and Telephone Security Interface Unit (TSIU) used with Telephone Set TA-838()/TT. To be replaced by the DSVT, TSEC/KY-68 when the ULCS is placed in service.

Figure 5-13. Combat Service Support Element Headquarters Node, Present-1991 (con't)

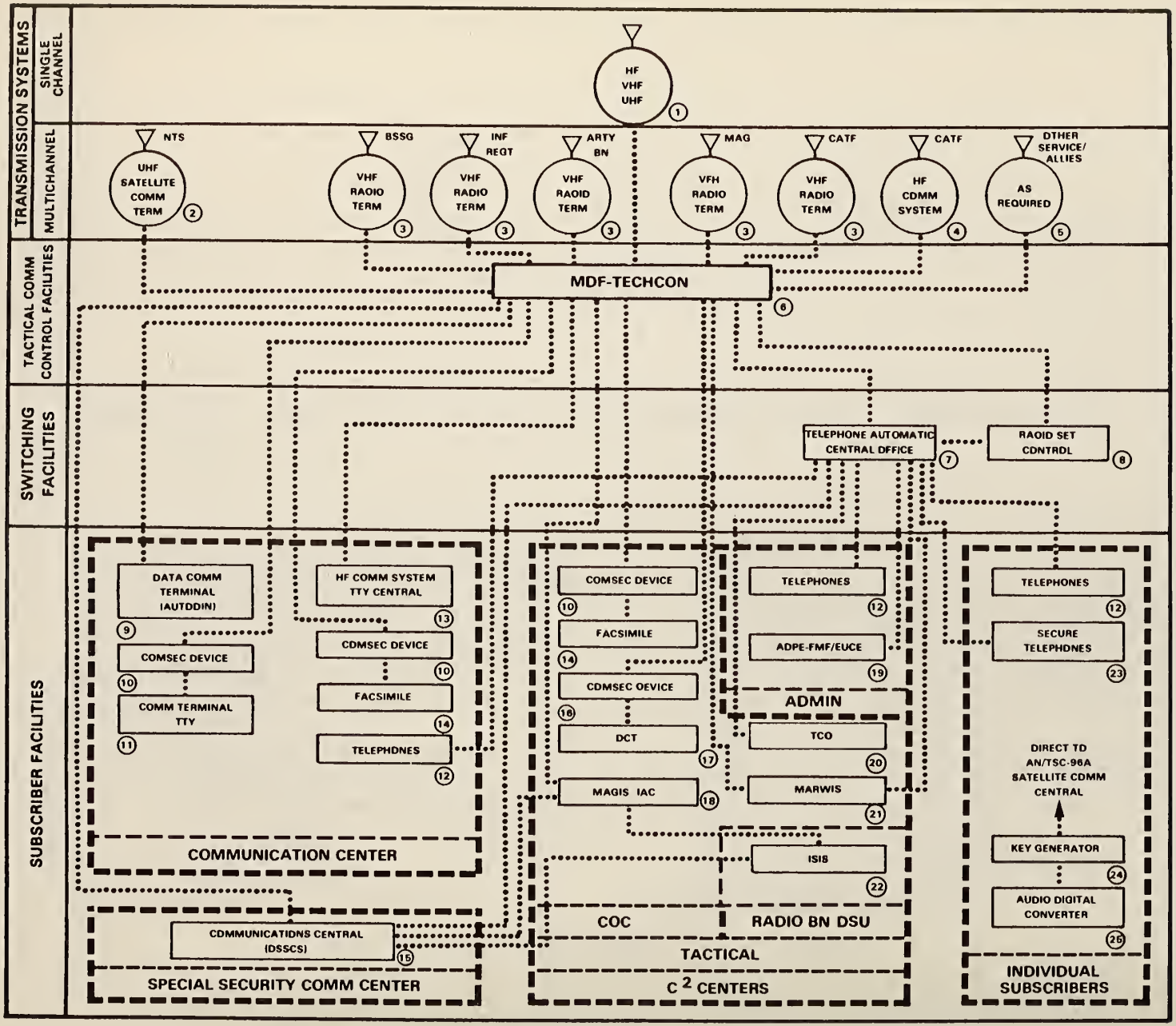

Figure 5-14. Marine Amphibious Brigade Headquarters Node, Present-1991

Systems/Equipment in Use and Projected Replacements Present-1991

Single Channel Radios

1. HF: Radio Terminal Set AN/MRC-138.
   Radio Set AN/PRC-104.
   VHF: Radio Set AN/PRC-68.
   Radio Set AN/PRC-77.
   Radio Set AN/VRC-12.
   UHF: Radio Terminal Set AN/MRC-138(UHF).
   Radio Set AN/PRC-75. To be replaced with Radio Set AN/PRC-113 starting 1986.

Multichannel Radios

2. UHF: Satellite Communications Central AN/TSC-96A
3. VHF: Radio Terminal Set AN/MRC-135.
4. HF: Communications System AN/TSC-95. May be replaced by the High Frequency Communications Terminal (HFCT) AN/TSC-120 during period.
5. As required for communications with other Services/allies.

Other Systems/Equipment

6. Main Distribution Frame/Communication Technical Control Center AN/TSQ-84.
7. Central Office, Telephone, Automatic AN/TTC-38(V) to be replaced by the Automatic Telephone Central Office, AN/TTC-42 (ULCS) during this period.
8. Control, Radio Set C-6709/G. The Secure Digital Net Radio Interface Unit (SDNRIU), TSEC/KY-90 is used with the AN/TTC-42 and will replace the C-6709/G when the ULCS is placed in service.
9. Communications Central AN/TGC-37(V). To be replaced by AN/MSC-63A Communications Central starting 1990.
10. Dedicated Loop Encryption Device (DLED) TSEC/KG-84A.

Other Systems/Equipment (Cont'd)

11. Communications Terminal AN/UGC-74A(V)3.
12. Telephone Set TA-838()/TT. To be replaced by the Digital Nonsecure Voice Terminal (DNVT), TA-954 when the ULCS is placed in service.
13. Communications System AN/TSC-95 (AN/TGC-46). The TGC-46 is teletypewriter central for TSC-95. It may be replaced by the Communication Central AN/TSC-63A starting in 1990.
14. Tactical Facsimile Set AN/GXC-7A. To be replaced by Tactical Facsimile Set AN/UXC-7 starting 1987.
15. Communications Central AN/MSC-63. To be replaced by AN/MSC-63A starting 1988.
16. VINSON Security Equipment TSEC/KY-57.
17. Digital Communications Terminal AN/PSC-2.
18. Intelligence Analysis Center AN/TYQ-19(V).
19. Automated Data Processing Equipment-Fleet Marine Force. To be replaced by End Use Computing Equipment (EUCE) during this period.
20. Tactical Combat Operations (TCO) Systems. IOC 1990.
21. Marine Corps WWMCCS Information System (MARWIS) Terminal.
22. Existing radio battalion SIGINT equipment. Integrated Signals Intelligence System to be fielded during this period.
23. PARKHILL Narrowband Security Equipment TSEC/KY-65 and Telephone Security Interface Unit (TSIU) used with Telephone TA-838()/TT. To be replaced by the Digital Subscriber Voice Terminal (DSVT), TSEC/-KY-68 when the ULCS is placed in service.
24. Key Generator TSEC/KG-36.
25. Audio Digital Converter CV-3333/U.

Figure 5-14. Marine Amphibious Brigade Headquarters Node, Present-1991 (con't)

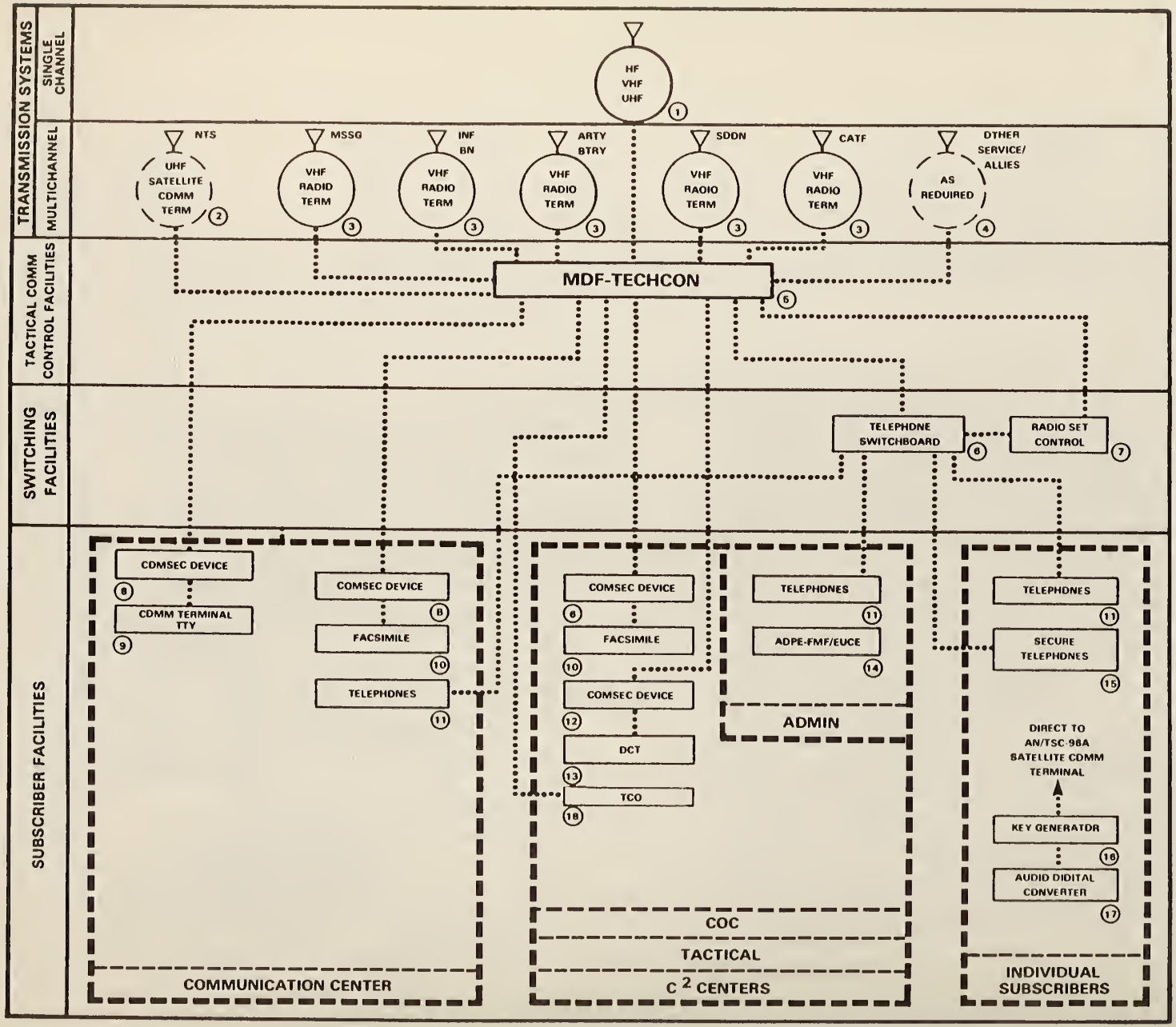

Figure 5-15. Marine Amphibious Unit Headquarters Node, Present-1991

Systems/Equipment in Use and Projected Replacements Present-1991

Single Channel Radios

1. HF: Radio Terminal Set AN/MRC-138.
   Radio Set AN/PRC-104.
   VHF: Radio Set AN/PRC-68.
   Radio Set AN/PRC-77.
   Radio Set AN/VRC-12.
   UHF: Radio Terminal Set AN/MRC-138(UHF).
   Radio Set AN/PRC-75. To be replaced with Radio Set AN/PRC-113 starting 1986.
   Radio Set AN/VRC-83.

Multichannel Radios

2. UHF: Satellite Communications Central AN/TSC-96A (As Required)
3. VHF: Radio Terminal Set AN/MRC-135.
4. As required for communications with other Services/ allies.

Other Systems/Equipment

5. Main Distribution Frame-Technical Control.
6. Switchboard, Telephone SB-3614( )/TT. To be replaced by the Automatic Digital Switchboard, SB-3865(P)/-TTC (ULCS) during this period.
7. Control, Radio Set C-6709/G. To be replaced by the Secure Digital Net Radio Interface Unit (SDNRIU), TSEC/KY-90 when the ULCS is placed in service.

Other Systems/Equipment (Cont'd)

8. Digital Loop Encryption Device (DLED) TSEC/KG-84A/C.
9. Communications Terminal AN/UGC-74A(V)3.
10. Tactical Facsimile Set AN/GXC-7A. To be replaced by Tactical Facsimile Set AN/UXC-7 starting 1987.
11. Telephone TA-838( )/TT. To be replaced by the Digital Nonsecure Voice Terminal (DNVT), TA-954 when the ULCS is placed in service.
12. VINSON Security Equipment TSEC/KY-57.
13. Digital Communications Terminal AN/PSC-2.
14. Automated Data Processing Equipment-Fleet Marine Force. To be replaced by End Use Computing Equipment (EUCE) during this period.
15. PARKHILL Narrowband Security Equipment TSEC/KY-65 and Telephone Security Interface Unit (TSIU) used with Telephone TA-838( )/TT. To be replaced by the Digital Subscriber Voice Terminal (DSVT) when the ULCS is placed in service.
16. Key Generator TSEC/KG-36.
17. Audio Digital Converter CV-3333/U.
18. Tactical Combat Operations (TCO) System. IOC 1990.

Figure 5-15. Marine Amphibious Unit Headquarters Node, Present-1991 (con't)

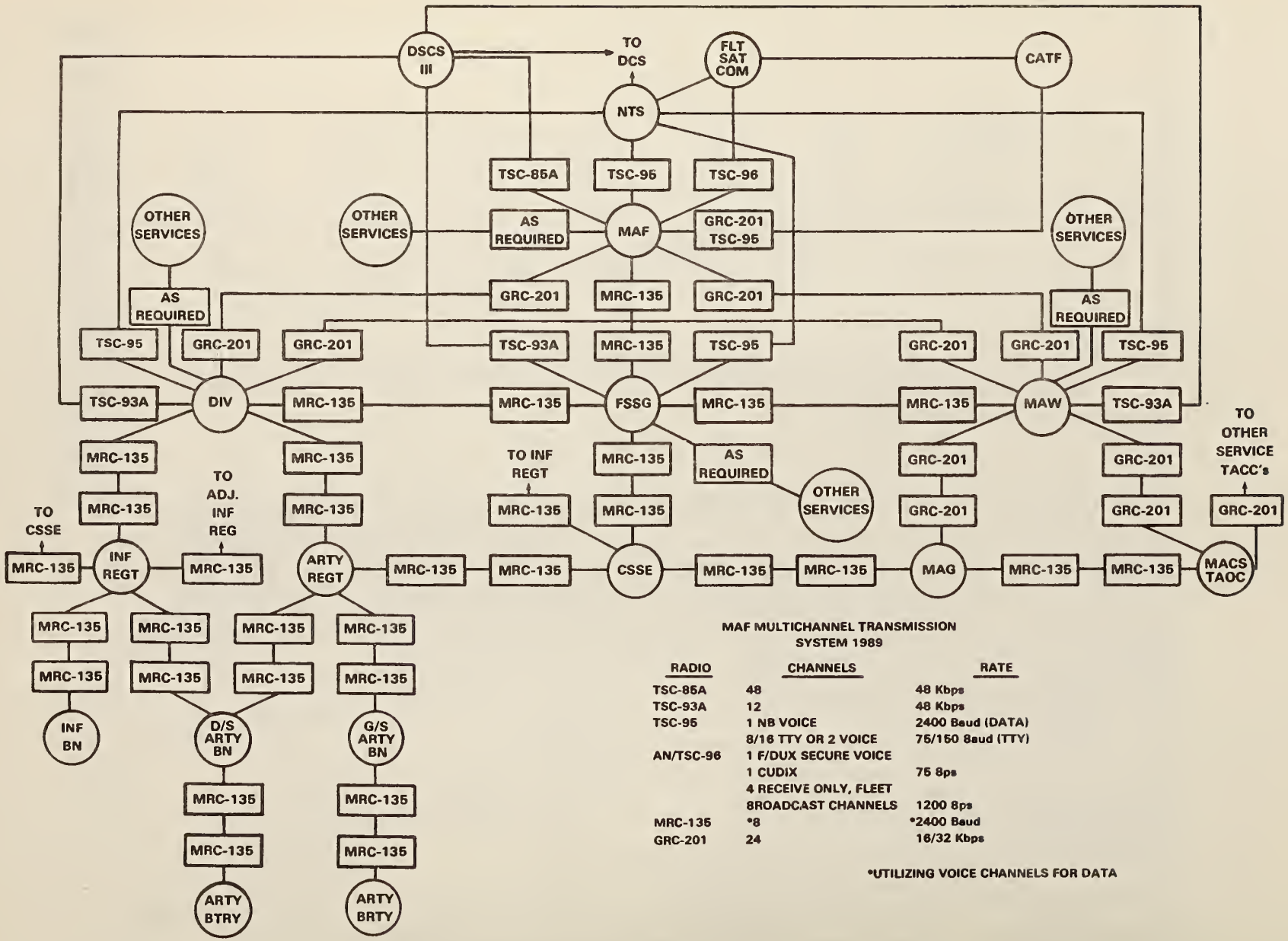

MAF MULTICHANNEL TRANSMISSION SYSTEM 1989

RADIO	CHANNELS	RATE
TSC-85A	48	48 Kbps
TSC-93A	12	48 Kbps
TSC-95	1 NB VOICE	2400 Baud (DATA)
	8/16 TTY OR 2 VOICE	75/150 Baud (TTY)
AN/TSC-96	1 F/DUX SECURE VOICE	
	1 CUDIX	75 Bps
	4 RECEIVE ONLY, FLEET	
	BROADCAST CHANNELS	1200 Bps
MRC-135	*8	*2400 Baud
GRC-201	24	16/32 Kbps

*UTILIZING VOICE CHANNELS FOR DATA

Figure 5-16. MAF Multichannel Transmission System, 1989

507 COMMUNICATION ARCHITECTURE PROJECTION, 1992-1996

This section describes the communication architecture during the 1992-1996 time frame. During this time period the communication system will continue its transition from analog to digital communications as digital systems are phased into service and analog systems are phased out. The transition from analog to digital communications should be completed by the end of this period.

507.1 New Equipment

The following equipment is scheduled to be fielded during the 1992-1996 time period. Brief technical descriptions of items are contained in appendix D. Tactical data systems are described in chapters II.

NEW ITEM	REPLACES	IOC
Subscriber Facilities		
Tactical Data Systems:		
Marine Integrated Fire and Air Support System (MIFASS) AN/TYQ-38(V)	New Item	1992
Advanced Tactical Air Command Central (ATACC)	AN/TYQ-1 and AN/TYQ-3A	1992
Tactical Combat Operations System (TCO)	New Item	1994
Switching Equipment:		
Switching Set, Message, Automatic AN/GYC-7 (ULMS)	New Item	1992
Transmission Systems		
Single Channel Radios:		
JTIDS Class 2H Terminal in AN/TYQ-23, TAOM	New Item	1994
JTIDS Class 2H Terminal in Advanced Tactical Air Command Central (ATACC)		TBD
Single Channel Objective Tactical Terminal (SCOTT)	New Item	1993
Radio Set, Family AN/PRC/GRC-(SINCGARS)	New Item	1995
Multichannel Radios:		
Radio Set AN/MRC-139	AN/MRC-134 and AN/MRC-135	1992
Troposcatter Radio Set AN/TRC-170(V)3	Radio Set AN/GRC-201	1992

507.2 Subscriber Facilities. MIFASS, ATACC, and TCO will join PLRS, TAOM, and MAGIS in the field, substantially completing the initial fielding of the MTACC systems. Additional details concerning MIFASS, ATACC, and TCO are contained in chapter III.

a. Long Locals. MIFASS and TCO will communicate through the ULCS and ULMS. At those nodes where TDS terminals are present but where there is no circuit or message switch, terminals will be linked to the next higher headquarters' switches as long locals.

b. Position Location Information (PLI). PLI will be transmitted from PLRS to MIFASS by cable direct from the PLRS master station to the MIFASS DCE or by an ULMS link. The MIFASS position location information processor (PLIP) correlates PLRS PLI with PLI from other sources. It stores the correlated PLI in a master track file and distributes it via the ULMS and signal channel radio to MIFASS/TCO-equipped centers requesting track data.

c. Connectivity. MIFASS, TCO, TAOM, and ATACC will all be compatible with the ULMS for data transfer and with the ULCS for voice communications, using the DSVT and DNVT.

507.3 Switching Facilities. During this period the ULMS will be phased into service. The MAGTF and major subordinate headquarters will each include one or more AN/TTC-42s and AN/GYC-7s. Lower echelons will use the AN/GYC-7 and either the SB-3865(P)/TT or other equipment, to be designated, to provide a digital switching capability.

507.3.1 Automatic Message Switching Set, AN/GYC-7. The AN/GYC-7 will serve as message switch for MTACCS TDSs at infantry regiment, aircraft group, artillery battalion, CSSE level, and above, providing a capability to switch real-time and near-real-time digital data.

a. Description. The AN/GYC-7 is a small, 12-line switch with integral COMSEC equipment. It is equipped with an integral supervisor control facility, with provisions to accept the AN/UGC-74A(V)3 terminal.

b. Capabilities. The AN/GYC-7 message switch will permit users to communicate over dedicated trunks at 16 Kbps. It will accept messages containing up to 16 routing indicators. The AN/GYC-7 will interoperate with the AN/TTC-42, the SB-3865, and all MTACC systems.

507.4 Tactical Communications Control Facilities (TCCF). Tactical communications control facilities during the 1992-1996 time period will accommodate fiber optic cable, 26-pair assault cable, and field wire. The AN/TSQ-84 will have reached the end of its service life and must be improved or replaced to handle digital transmissions. Although the SB-3865 and AN/TTC-42 will provide a limited communication control capability, a more adequate TCCF will be developed to service Marine Corps needs during this period.

507.5 Transmission Systems. During the 1992-1996 time period JTIDS Class 2H terminals will be included in TAOMs and ATACCs. Other major transmission systems planned for this period include the SCOTT, the AN/TRC-170(V)3, and the AN/MRC-139.

507.5.1 Multichannel Systems

507.5.1.1 Troposcatter Radio Set AN/TRC-170(V)3. The AN/TRC-170 will replace the Radio Set AN/GRC-201 early in this period. It is housed in an S-250 shelter and provides the capability for SHF transmission and reception of 60 traffic channels for digital voice, analog voice, and quasi-analog or digital data signals. Operational modes include internodal trunking, remote subscriber access, subscriber access at relay, dedicated trunking, and multi-trunking over either line-of-sight distances or troposcatter transmission ranges up to 100 miles. The AN/TRC-170(V)3 will be employed at MAF, MARDIV, MAW, FSSG, and MAB headquarters.

507.5.1.2 Radio Set AN/MRC-139. The AN/MRC-139 will replace the AN/MRC-135 early in this period. The AN/MRC-139 Digital Wideband Transmission System (DWTS) provides a high degree of mobility together with a highly effective communication capability for 60-kilometer line-of-sight paths. It provides for eight 16 or 32 kbps single subscriber four-wire terminations with either all digital channels, or four digital and four analog channels with use of the optional analog applique unit. The terminal's base radio has not yet been determined but it will probably operate in the 1.35 to 1.85 GHz band for transmission and reception of secure digital voice traffic.

507.5.2 Single-Channel Systems

507.5.2.1 Single-Channel Objective Tactical Terminal. SCOTT is a single-channel tactical EHF satellite system designed to provide essential communication support in all levels of conflict. It will be fielded to provide the Marine Corps with highly survivable, communication circuits for critical C^3 functions at the MAF, division, and MAW headquarters.

507.5.2.2 Joint Tactical Information Distribution System. JTIDS is a secure, jam-resistant communication system that will support information distribution, relative navigation, and identification among intraservice and interservice tactical C^2 systems and facilities. JTIDS and TADIL J will be integrated with the AN/TYQ-23 TAOM and the ATACC. The initial Marine Corps capability will be achieved with the integration of the JTIDS CLass 2H terminal with the TAOM. Section 509 provides additional details concerning JTIDS.

507.5.2.3 AN/PSC-3 and AN/VSC-7. These radios will be product-improved during this time frame to digitize voice communications.

507.5.2.4 Single Channel Ground and Airborne Radio System (SINCGARS). The AN/PRC/GRC-(SINCGARS) will begin to replace the AN/VRC-12 family of radios and the AN/PRC-77 radio during this period. SINCGARS will provide antijam communications capabilities in the frequency range of 30.000 to 87.975 MHz with 25 kHz channel spacing in the frequency hopping mode.

507.6 System Nodal Diagrams. Figures 5-17 through 5-31 depict the communication architecture for nodes in the 1992-1996 time period. The diagrams do not attempt to reflect the quantity of equipment at any given node, which may vary with circumstances. The diagrams should be viewed as notional or baseline representations. There will be many potential configurations and applications for the equipment available during the time period.

a. Although most links between nodes are represented by multichannel radio equipment in each of the nodal diagrams, cable or wire may be used in those instances in which they are satisfactory. Single-channel net radio will be used in the early phases of an amphibious landing, in operations involving rapidly moving forces, and other circumstances when multichannel circuit operation is impractical.

b. Figure 5-32 is an overview of the multichannel transmission system for the 1992-1996 period. It depicts the channels and transmission rates for equipment used for each link, as depicted in the nodal diagrams. Brief descriptions of the communication equipment shown in the diagrams are contained in appendix D and in Marine Corps Technical Manual 2000-15/2 Principal Technical Characteristics of U.S Marine Corps Communication-Electronic Equipment.

THIS PAGE INTENTIONALLY LEFT BLANK

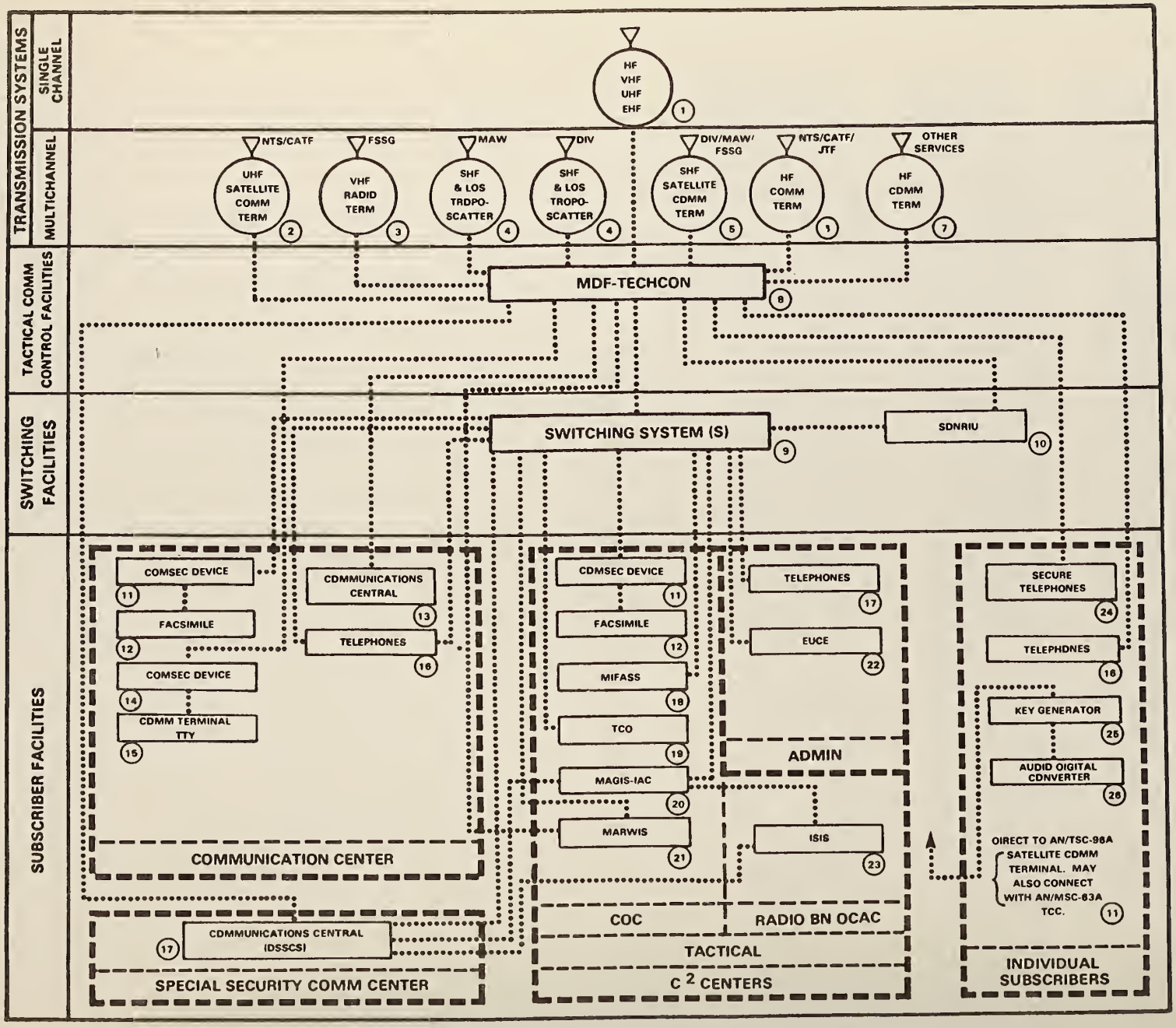

Figure 5-17. Marine Amphibious Force Headquarters Node, 1992-1996

Systems/Equipment in Use and Projected Replacements 1992-1996

Single Channel Radios

1. HF: Radio Terminal Set AN/MRC-138.
   Radio Set AN/PRC-104.
   Radio Set AN/GRC-193.
   Receiver Radio R-2174(P)URR.
   VHF: Radio Set AN/PRC-77. To be replaced by Radio Set AN/PRC-119 (SINCGARS) starting 1994.
   Radio Set AN/VRC-12. To be replaced by Radio Set AN/VRC-89 (SINCGARS) starting 1994.
   UHF: Radio Terminal Set AN/MRC-138(UHF).
   Radio Terminal Set AN/GRC-171A(V)2.
   Radio Set AN/VRC-83.
   Vehicular Satellite Terminal AN/VRC-7.
   EHF: Single Channel Objective Tactical Terminal (SCOTT). IOC 1993.

Multichannel Radios

2. UHF: Satellite Communications Central AN/TSC-96A
3. VHF: Radio Terminal Set AN/MRC-135. To be replaced by Radio Set AN/MRC-139 starting 1992.
4. SHF: Troposcatter Radio Set AN/TRC-170(V)3. IOC 1992. Replaces Radio Set AN/GRC-201.
5. SHF: Satellite Communications Terminal AN/TSC-85A.
6. HF: High Frequency Communication Central (HFCC), AN/TSC-120.
7. HF: High Frequency Communication Central (HFCC), AN/TSC-120 or as required.

Other Systems/Equipment

8. Main Distribution Frame and Technical Control. During this period Communications Technical Control Center AN/TSQ-84 will be upgraded/augmented/replaced with systems, to be determined, that will provide the required interfaces.

Other Systems/Equipment (Cont'd)

9. Switching Systems. Automatic Telephone Central Office, AN/TTC-42 (ULCS). The Automatic Message Switching Set, AN/GYC-7, (ULMS), to be fielded during this period, and the Automatic Digital Switchboard, SB-3865(P)/TTC, may be used in conjunction with the AN/TTC-42.
10. Secure Digital Net Radio Interface Unit (SDNRIU), TSEC/KY-90
11. VINSON Security Equipment TSEC/KY-57.
12. Tactical Facsimile Set AN/UXC-7.
13. Communications Central AN/MSC-63A.
14. Dedicated Loop Encryption Device (DLED) TSEC/KG-84C.
15. Communications Terminal AN/UGC-74A(V)3.
16. Telephones. Digital Non-secure Voice Terminal (DNVT) TA-954 and the Digital Subscriber Voice Terminal (DSVT) TSEC/KY-68.
17. Communications Central AN/MSC-63A.
18. Marine Integrated Fire and Air Support System (MIFASS) AN/UYQ-38(V). IOC 1992.
19. Tactical Combat Operations System (TCO). IOC 1994.
20. Marine Air-Ground Intelligence System-Intelligence Analysis Center (MAGIS-IAC) AN/TYQ-19(V).
21. Marine Corps WWMCCS Information System (MARWIS) Terminal
22. End Use Computing Equipment (EUCE).
23. Integrated Signals Intelligence System (ISIS), Technical Control and Analysis Center (TCAC), AN/TSQ-130.
24. Secure Telephones. The DSVT TSEC/KY-68 will be used where secure telephones are required.
25. Key Generator TSEC/KG-36.
26. Audio Digital Converter CV-3333/U.

Figure 5-17. Marine Amphibious Force Headquarters Node, 1992-1996 (con't)

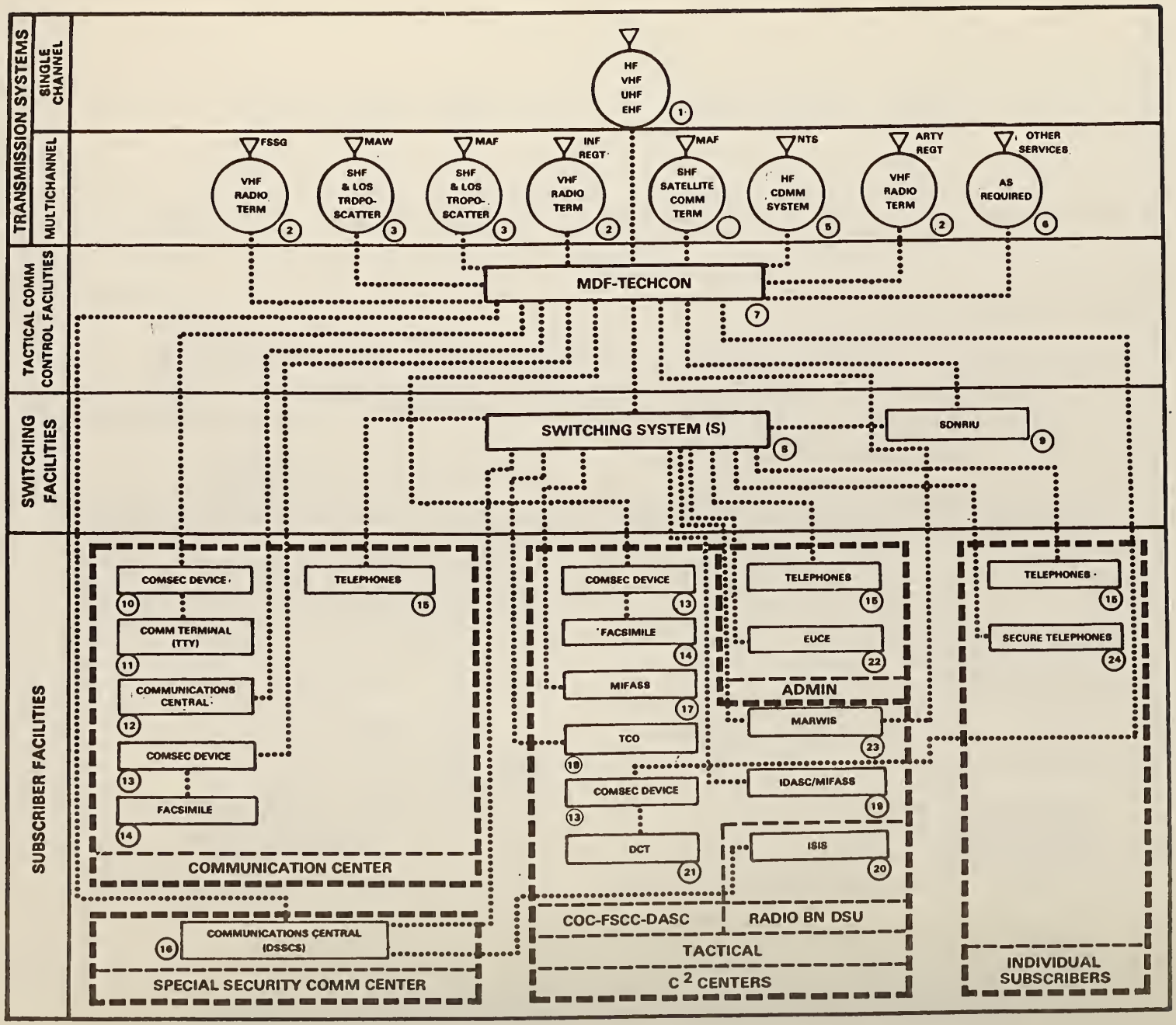

Figure 5-18. Marine Division Headquarters Node, 1992-1996

Systems/Equipment in Use and Projected Replacements 1992-1996

Single Channel Radios

1. HF: Radio Terminal Set AN/MRC-138.
   Radio Set AN/PRC-104.
   VHF: Radio Set AN/PRC-77. To be replaced by Radio Set AN/PRC-119 (SINCGARS) starting 1994.
   Radio Set AN/VRC-12. To be replaced by Radio Set AN/VRC-89 (SINCGARS) starting 1994.
   Radio Set AN/PRC-68.
   UHF: Radio Terminal Set AN/MRC-138(UHF).
   Radio Set AN/PRC-113.
   Manpack Satellite Terminal AN/PSC-3.
   EHF: Single Channel Objective Tactical Terminal (SCOTT). IOC 1993.

Multichannel Radios

2. VHF: Radio Terminal Set AN/MRC-135. To be replaced by Radio Set AN/MRC-139 starting 1992.
3. SHF: Troposcatter Radio Set AN/TRC-170(V)3. IOC 1992. Replaces Radio AN/GRC-201.
4. SHF: Ground Mobile Forces Satellite Communications Terminal AN/TSC-93A.
5. HF: High Frequency Communications Terminal (HFCT). AN/TSC-120
6. Systems as required to communicate with other Services/allies.

Other Systems/Equipment

7. Main Distribution Frame and Technical Control. During this period Communications Technical Control Center AN/TSQ-84 will be upgraded, augmented, and/or replaced with systems, to be determined, that will provide the required interfaces.

Other Systems/Equipment (Cont'd)

8. Switching Systems. Automatic Telephone Central Office, AN/TTC-42 (ULCS). The Automatic Message Switching Set, AN/GYC-7, (ULMS), to be fielded during this period, and the Automatic Digital Switchboard, SB-3865(P)/TTC may be used in conjunction with the AN/TTC-42.
9. Secure Digital Net Radio Interface Unit (SDNRIU), TSEC/KY-90.
10. Dedicated Loop Encryption Device (DLED) TSEC/KG-84C.
11. Communications Terminal AN/UGC-74A(V)3.
12. Communications Central AN/MSC-63A.
13. VINSON Security Equipment TSEC/KY-57.
14. Tactical Facsimile Set AN/UXC-7.
15. Telephones. Digital Nonsecure Voice Terminal (DNVT) TA-954 and the Digital Subscriber Voice Terminal (DSVT) TSEC/KY-68.
16. Communications Central AN/MSC-63A.
17. Marine Integrated Fire and Air Support System (MIFASS) AN/UYQ-38(V). IOC 1992.
18. Tactical Combat Operations (TCO) System. IOC 1994.
19. Improved Direct Air Support Central. Will be replaced by MIFASS during this period.
20. Integrated Signals Intelligence System Technical Control and Analysis Center (TCAC), AN/TSQ-130.
21. Digital Communications Terminal (DCT) AN/PSC-2.
22. End Use Computing Equipment.
23. Marine Corps WWMCCS Information System (MARWIS) Terminal.
24. Secure Telephones. The DSVT TSEC/KY-68 will be used where secure telephones are required.

Figure 5-18. Marine Division Headquarters Node, 1992-1996 (con't)

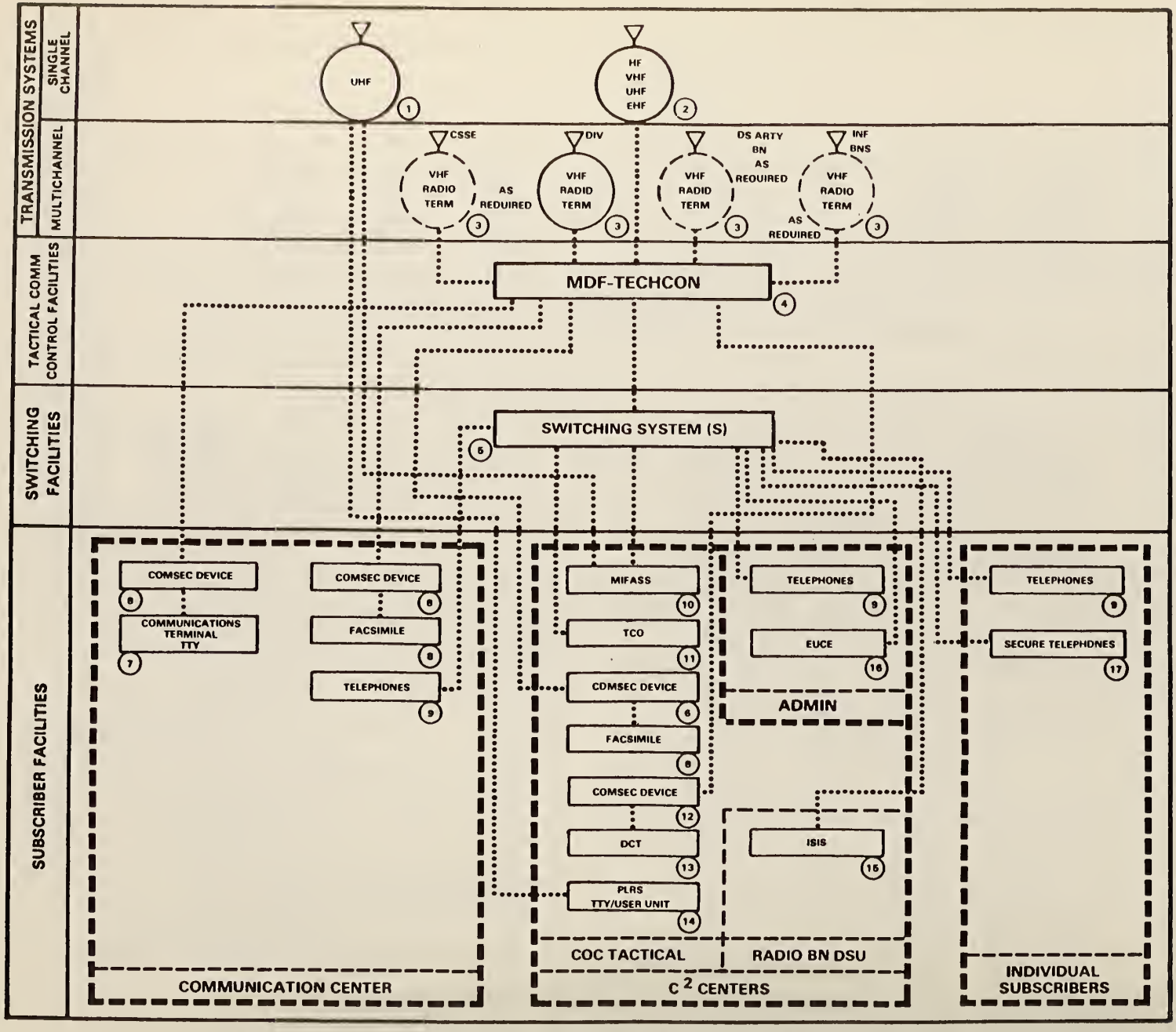

Figure 5-19. Infantry Regiment Headquarters Node, 1992-1996

Systems/Equipment in Use and Projected Replacements 1992-1996

Single Channel Radios

1. UHF: Master Station, Position Location Reporting System (PLRS) AN/TSQ-129.
2. HF: Radio Terminal Set AN/MRC-138.
   Radio Set AN/PRC-104.
   VHF: Radio Set AN/PRC-77. To be replaced by Radio Set AN/PRC-119 (SINCGARS) starting 1994.
   Radio Set AN/VRC-12. To be replaced by Radio Set AN/VRC-89 (SINCGARS) starting 1994.
   Radio Set AN/PRC-68.
   UHF: Radio Set AN/MRC-138(UHF).
   EHF: Single Channel Objective Tactical Terminal (SCOTT). IOC 1993.

Multichannel Radios

3. VHF: Radio Terminal Set AN/MRC-135. To be replaced by Radio Set AN/MRC-139 starting 1992.

Other Systems/Equipment

4. Main Distribution Frame-Technical Control.
5. Switching Systems. Automatic Telephone Switchboard, SB-3865, (ULCS). The Automatic Message Switching Set AN/GYC-7, (ULMS), to be fielded during this period, may also be used at the infantry regiment headquarters.

Other Systems/Equipment (Cont'd)

6. Dedicated Loop Encryption Device (DLED) TSEC/KG-84C.
7. Communications Terminal AN/UGC-74A(V)3.
8. Tactical Facsimile Set AN/UXC-7.
9. Telephones. Digital Nonsecure Voice Terminal (DNVT) TA-954 and the Digital Subscriber Voice Terminal (DSVT) TSEC/KY-68.
10. Marine Integrated Fire and Air Support System (MIFASS) AN/UYQ-38(V). IOC 1992.
11. Tactical Combat Operations (TCO) System. IOC 1994.
12. VINSON Security Equipment TSEC/KY-57.
13. Digital Communications Terminal (DCT) AN/PSC-2.
14. Radio Set, Manpack, PLRS AN/PSQ-4//Radio Set Vehicle, PLRS AN/VSQ-1//Communications Terminal AN/UGC-74A-(V)3
15. Integrated Signals Intelligence System (ISIS), Technical Control and Analysis Center (TCAC), AN/TSQ-130.
16. End Use Computing Equipment.
17. Secure Telephones. The DSVT TSEC/KY-68 will be used where secure telephones are required.

Figure 5-19. Infantry Regiment Headquarters Node, 1992-1996 (con't)

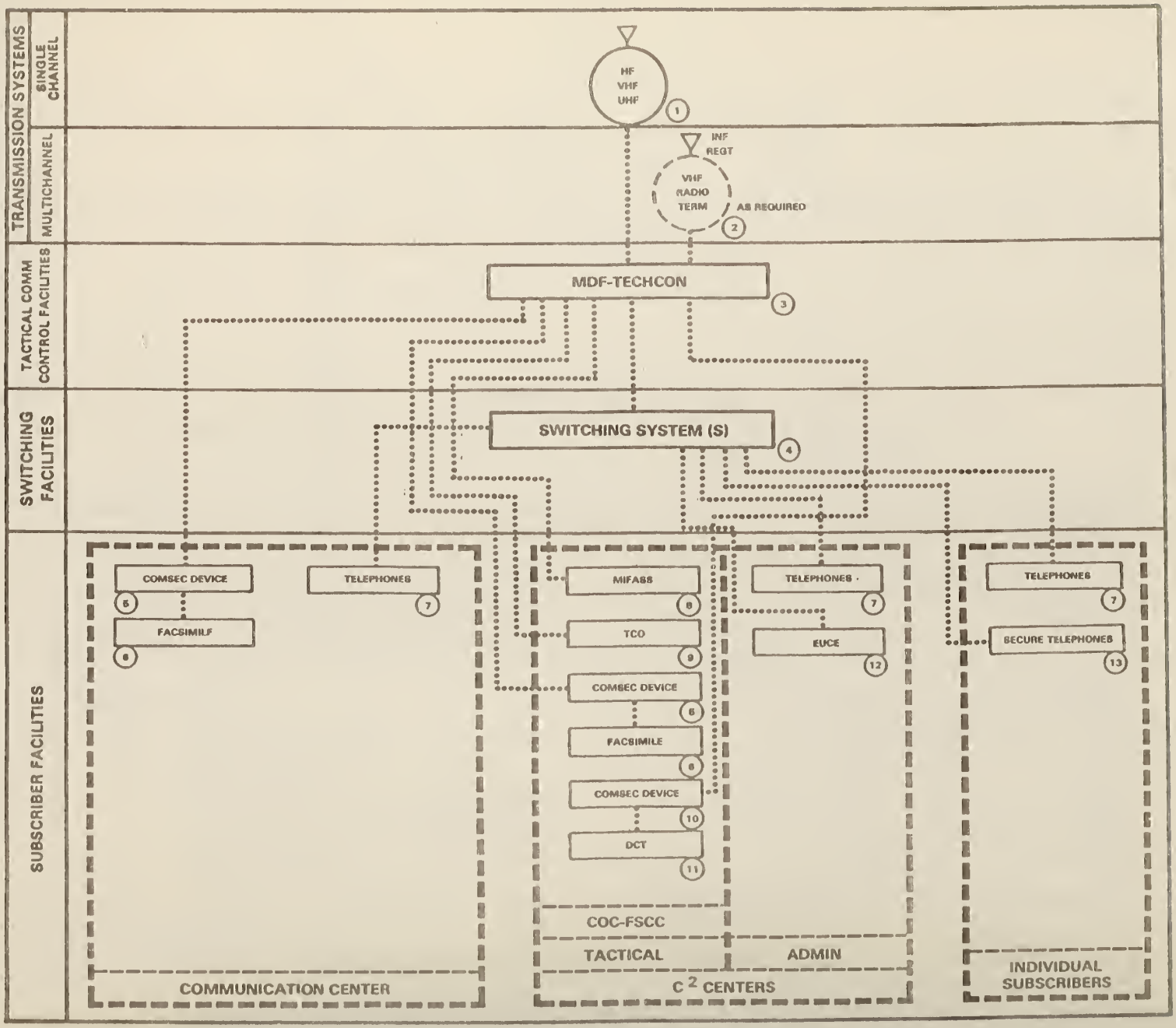

Figure 5-20. Infantry/Light Armored Vehicle Battalion Headquarters Node, 1992-1996

Systems/Equipment in Use and Projected Replacements 1992-1996

Single Channel Radios

1. HF: Radio Terminal Set AN/MRC-138.
   Radio Set AN/PRC-104.
   Radio Set AN/PRC-68.
   VHF: Radio Set AN/PRC-77. To be replaced by Radio Set AN/PRC-119 (SINCGARS) starting 1994.
   Radio Set AN/VRC-12. To be replaced by Radio Set AN/VRC-89 (SINCGARS) starting 1994.
   UHF: Radio Terminal Set AN/MRC-138(UHF).
   Radio Set AN/PRC-113.

Multichannel Radios

2. VHF: Radio Terminal Set AN/MRC-135. To be replaced by Radio Set AN/MRC-139 starting 1992.

Other Systems/Equipment

3. Main Distribution Frame-Technical Control.
4. Switching Systems. During this period the Telephone Switchboard SB-3614( )/TT may be augmented or replaced with a system, to be determined, that will provide secure digital subscriber service to the infantry battalion.

Other Systems/Equipment (Cont'd)

5. Dedicated Loop Encryption Device (DLED) TSEC/KG-84C.
6. Tactical Facsimile Set AN/UXC-7.
7. Telephones. With the introduction of switches capable of servicing digital telephones, the Digital Nonsecure Voice Terminal (DNVT) TA-954 and the Digital Subscriber Voice Terminal (DSVT) TSEC/KY-68 will replace Telephone Sets TA-312/PT and TA-838.
8. Marine Integrated Fire and Air Support System (MIFASS) AN/UYQ-38(V). IOC 1992.
9. Tactical Combat Operations (TCO) System. IOC 1994.
10. VINSON Security Equipment TSEC/KY-57.
11. Digital Communications Terminal (DCT) AN/PSC-2.
12. End Use Computing Equipment (EUCE).
13. Secure Telephones. Digital Subscriber Voice Terminal (DSVT) TSEC/KY-68.

Figure 5-20. Infantry/Light Armored Vehicle Battalion Headquarters Node, 1992-1996 (con't)

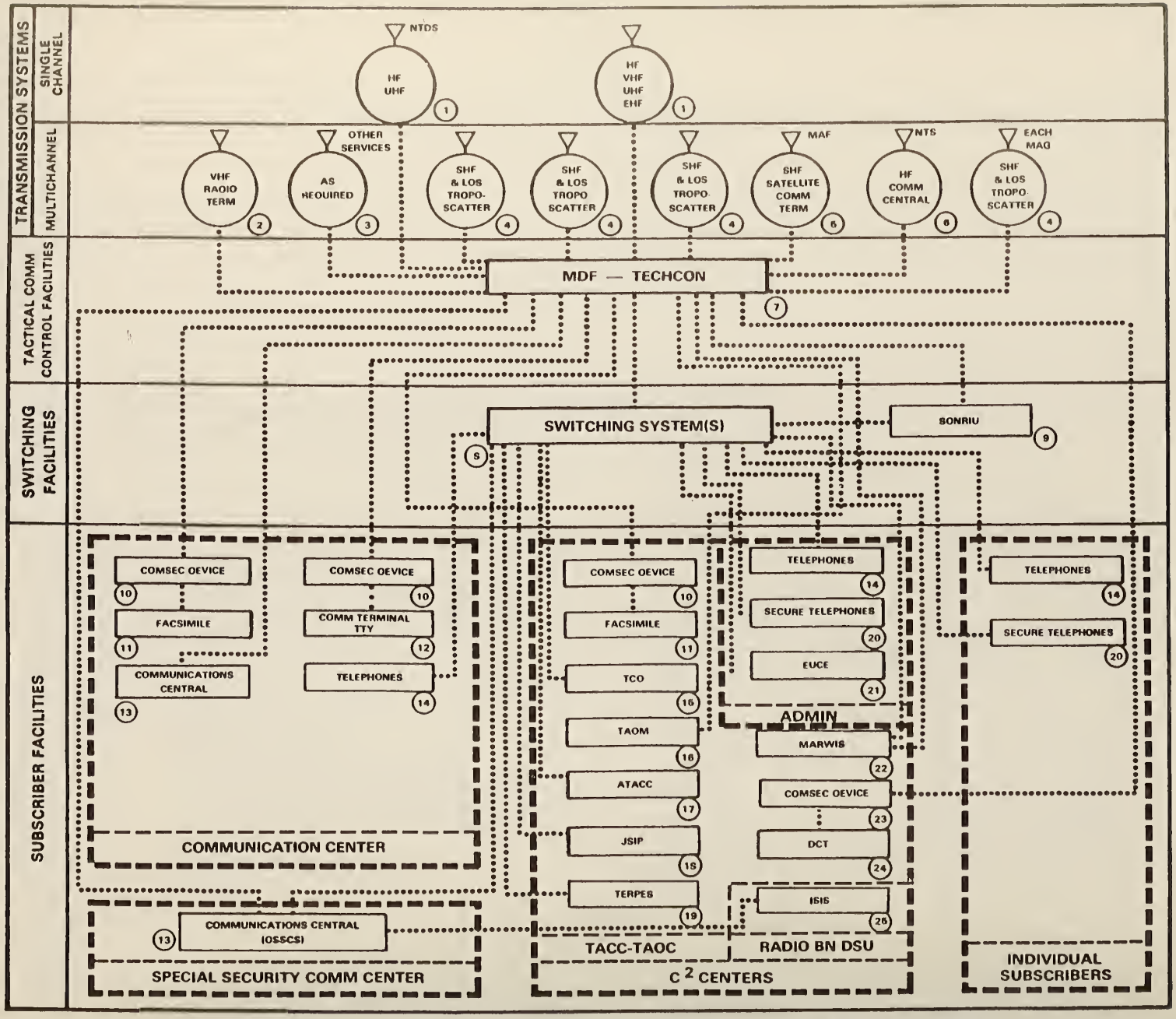

Figure 5-21. Marine Aircraft Wing Headquarters Node, 1992-1996

Systems/Equipment in Use and Projected Replacements 1992-1996

Single Channel Radios

1. HF: Radio Terminal Set AN/MRC-138.
   Radio Set AN/PRC-104.
   Radio Set AN/GRC-193.
   Radio Central OE-33/TRC. Provides for up to four HF, three VHF(FM), two VHF(AM), and six UHF radios.

   VHF: Radio Central OE-33/TRC.
   Radio Set AN/PRC-77. To be replaced by Radio Set AN/PRC-119 (SINCGARS) starting 1994.
   Radio Set AN/VRC-12. To be replaced by Radio Set AN/VRC-89 (SINCGARS) starting 1994.

   UHF: Radio Central OE-33/TRC.
   Radio Terminal Set AN/GRC-171A(V)2.
   Radio Set AN/PRC-113.
   Radio Terminal Set AN/MRC-138(UHF).

   EHF: Single Channel Objective Tactical Terminal (SCOTT). IOC 1993.

Multichannel Radios

2. VHF: Radio Terminal Set AN/MRC-135. To be replaced by Radio Set AN/MRC-139 starting 1992.
3. As required for communications with other Services and allies.
4. SHF: Troposcatter Radio Set AN/TRC-170(V)3. IOC 1992. Replaces Radio Set AN/GRC-201.
5. SHF: Satellite Communications Terminal AN/TSC-93A.
6. HF: High Frequency Communications Terminal (HFCT). AN/TSC-120.

Other Systems/Equipment

7. Main Distribution Frame - Technical Control. During this period Communications Technical Control Center AN/TSQ-84 will be upgraded/augmented/ replaced with systems, to be determined, that will provide the required interfaces.

Other Systems/Equipment (Cont'd)

8. Switching Systems. Automatic Telephone Central Office, AN/TTC-42, (ULCS). The Automatic Message Switching Set, AN/GYC-7, (ULMS), to be fielded during this period, and the Automatic Digital Switchboard, SB-3865(P)/TTC, may be used in conjunction with the AN/TTC-42.
9. Secure Digital Net Radio Interface Unit (SDNRIU), TSEC/KY-90.
10. Dedicated Loop Encryption Device (DLED) TSEC/KG-84C.
11. Tactical Facsimile Set AN/UXC-7.
12. Communications Terminal AN/UGC-74A(V)3.
13. Communications Central AN/MSC-63A.
14. Telephones. Digital Nonsecure Voice Terminal (DNVT) TA-954 and Digital Subscriber Voice Terminal (DSVT),TSEC/KY-68.
15. Tactical Combat Operations (TCO) System. IOC 1994.
16. Tactical Air Operations Module AN/TYQ-23.
17. Advanced Tactical Air Command Central (ATACC). IOC 1992. A JTIDS Class 2H terminal will be fielded for use in connection with the ATACC during this period.
18. Marine Air-Ground Intelligence System (MAGIS), Joint Source Imagery Processor (JSIP).
19. Tactical Electronic Reconnaissance Processing and Evaluation System (TERPES), AN/TSQ-90B.
20. Secure Telephones. Digital Subscriber Voice Terminal (DSVT) TSEC/KY-68.
21. End Use Computing Equipment.
22. Marine Corps WWMCCS Information System (MARWIS) Terminal.
23. VINSON Security Equipment TSEC/KY-57.
24. Digital Communications Terminal (DCT) AN/PSC-2.
25. Integrated Signals Intelligence System, Technical Control and Analysis Center (TCAC), AN/TSQ-130.

Figure 5-21. Marine Aircraft Wing Headquarters Node, 1992-1996 (con't)

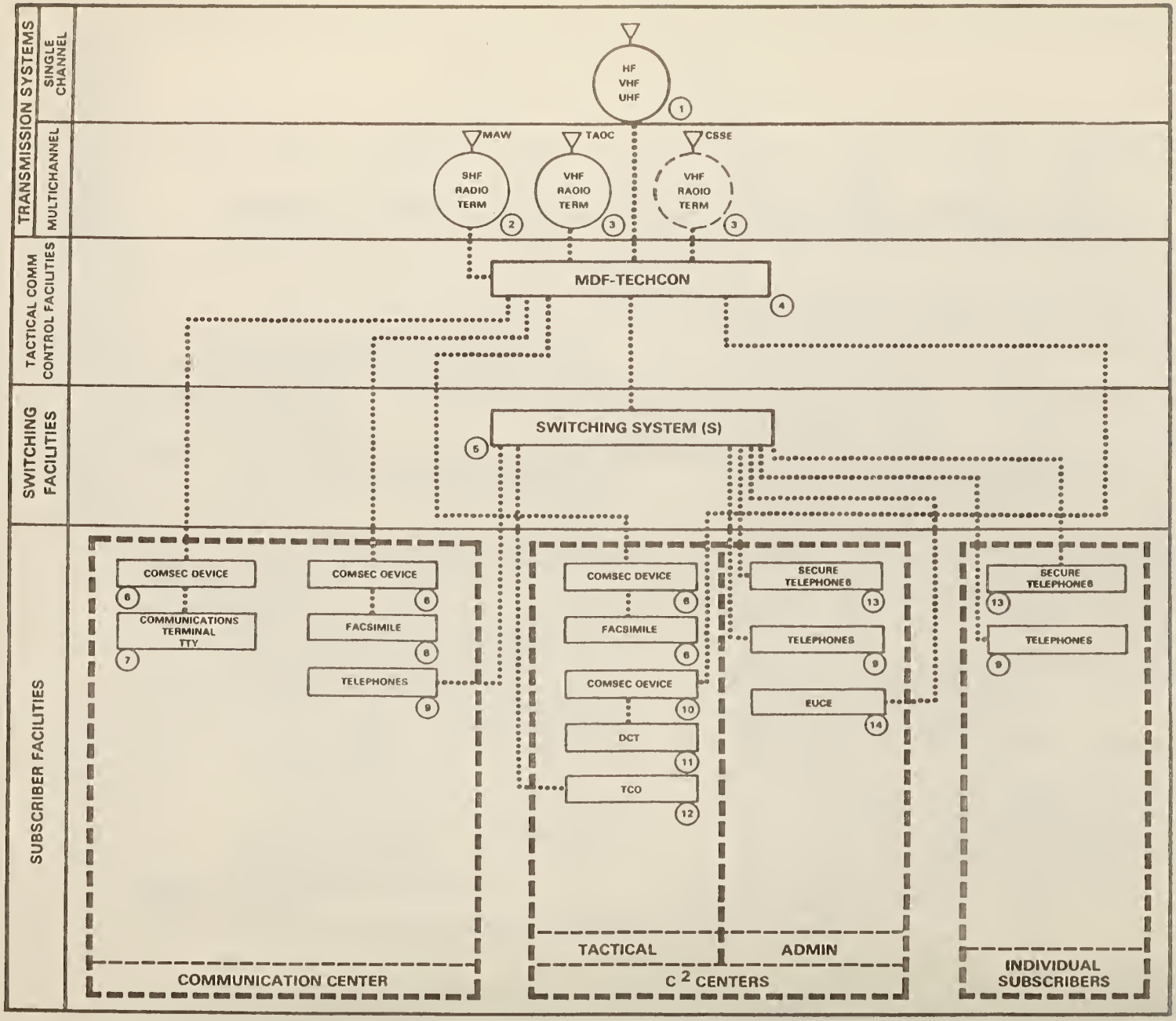

Figure 5-22. Marine Aircraft Group Headquarters Node, 1992-1996

Systems/Equipment in Use and Projected Replacements 1992-1996

Single Channel Radios

1. HF: Radio Terminal Set AN/MRC-138.
   Radio Set AN/PRC-104.
   Radio Set AN/GRC-193.
   VHF: Radio Set AN/PRC-77. To be replaced by Radio Set AN/PRC-119 (SINCGARS) starting 1994.
   Radio Set AN/VRC-12. To be replaced by Radio Set AN/VRC-89 (SINCGARS) starting 1994.
   UHF: Radio Terminal Set AN/MRC-138(UHF).
   Radio Set AN/PRC-113.
   Radio Terminal Set AN/GRC-171A(V)2.

Multichannel Radios

2. SHF: Troposcatter Radio set AN/TRC-170(V)3. IOC 1992. Replaces Radio Set AN/GRC-201.
3. VHF: Radio Terminal AN/MRC-139. To replace Radio Set AN/MRC-135 starting 1992.

Other Systems/Equipment

4. Main Distribution Frame-Technical Control.
5. Switching System. Automatic Telephone Switching Unit SB-3865(P)/TT (ULCS).
6. Dedicated Loop Encryption Device (DLED) TSEC/KG-84C.
7. Communications Terminal AN/UGC-74A(V)3.
8. Tactical Facsimile Set AN/UXC-7.
9. Telephones. Digital Nonsecure Voice Terminal (DNVT) TA-954 and the Digital Subscriber Voice Terminal (DSVT) TSEC/KY-68.
10. VINSON Security Equipment TSEC/KY-57.
11. Digital Communications Terminal (DCT) AN/PSC-2.
12. Tactical Combat Operations (TCO) System. IOC 1994.
13. Digital Subscriber Voice Terminal (DSVT) TSEC/KY-68.
14. End Use Computing Equipment (EUCE).

Figure 5-22. Marine Aircraft Group Headquarters Node, 1992-1996 (con't)

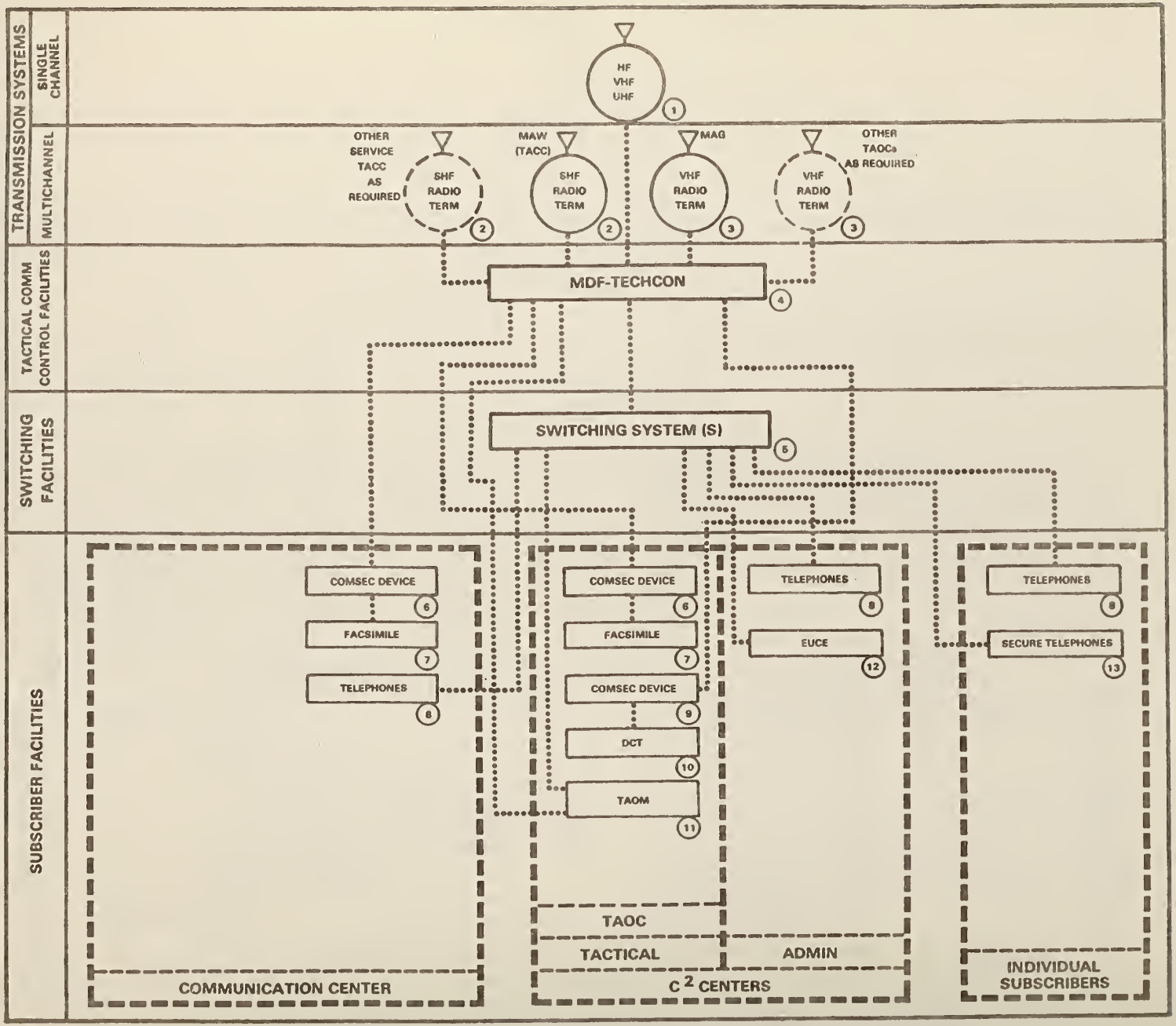

Figure 5-23. Marine Air Control Squadron Node, 1992-1996

Systems/Equipment in Use and Projected Replacements 1992-1996

Single Channel Radios

1. HF: Radio Terminal Set AN/MRC-138.
   Radio Set AN/PRC-104.
   Radio Set AN/GRC-193.
   Radio Set AN/URC-97(V)2.
   VHF: Radio Set AN/PRC-77. To be replaced by Radio Set AN/PRC-119 (SINCGARS) starting 1994.
   Radio Set AN/VRC-12. To be replaced by Radio Set AN/VRC-89 (SINCGARS) starting 1994.
   Receiver-Transmitter Unit RT-524/VRC.
   Radio Receiver R-422/VRC.
   UHF: Radio Set AN/PRC-113.
   Radio Terminal Set AN/MRC-138(UHF).
   Radio Terminal Set AN/GRC-171A(V)2
   Receiver-Transmitter, Radio RT-1272A/GRC-171(V)

Multichannel Radios

2. SHF: Troposcatter Radio Set AN/TRC-170(V)3. IOC 1992. Replaces Radio Set AN/GRC-201.
3. VHF: Radio Terminal Set AN/MRC-139. To replace Radio Set AN/MRC-135 starting 1992.

Other Systems/Equipment

4. Main Distribution Frame-Technical Control.
5. Switching System. Automatic Telephone Switching Unit SB-3865(P)/TT (ULCS). The Automatic Message Switching Set AN/GYC-7 (ULMS) to be fielded during this period may be employed in conjunction with the ULCS.
6. Dedicated Loop Encryption Device (DLED) TSEC/KG-84C.
7. Tactical Facsimile Set AN/UXC-7.
8. Telephones. Digital Nonsecure Voice Terminal (DNVT) TA-954 and the Digital Subscriber Voice Terminal (DSVT) TSEC/KY-68.
9. VINSON Security Equipment TSEC/KY-57.
10. Digital Communications Terminal (DCT) AN/PSC-2.
11. Tactical Air Operations Central AN/TYQ-23. A JTIDS Class 2H Terminal will be fielded for use with the TAOM during this period.
12. End Use Computing Equipment (EUCE).
13. Digital Subscriber Voice Terminal (DSVT) TSEC/KY-68.

Figure 5-23. Marine Air Control Squadron Node, 1992-1996 (con't)

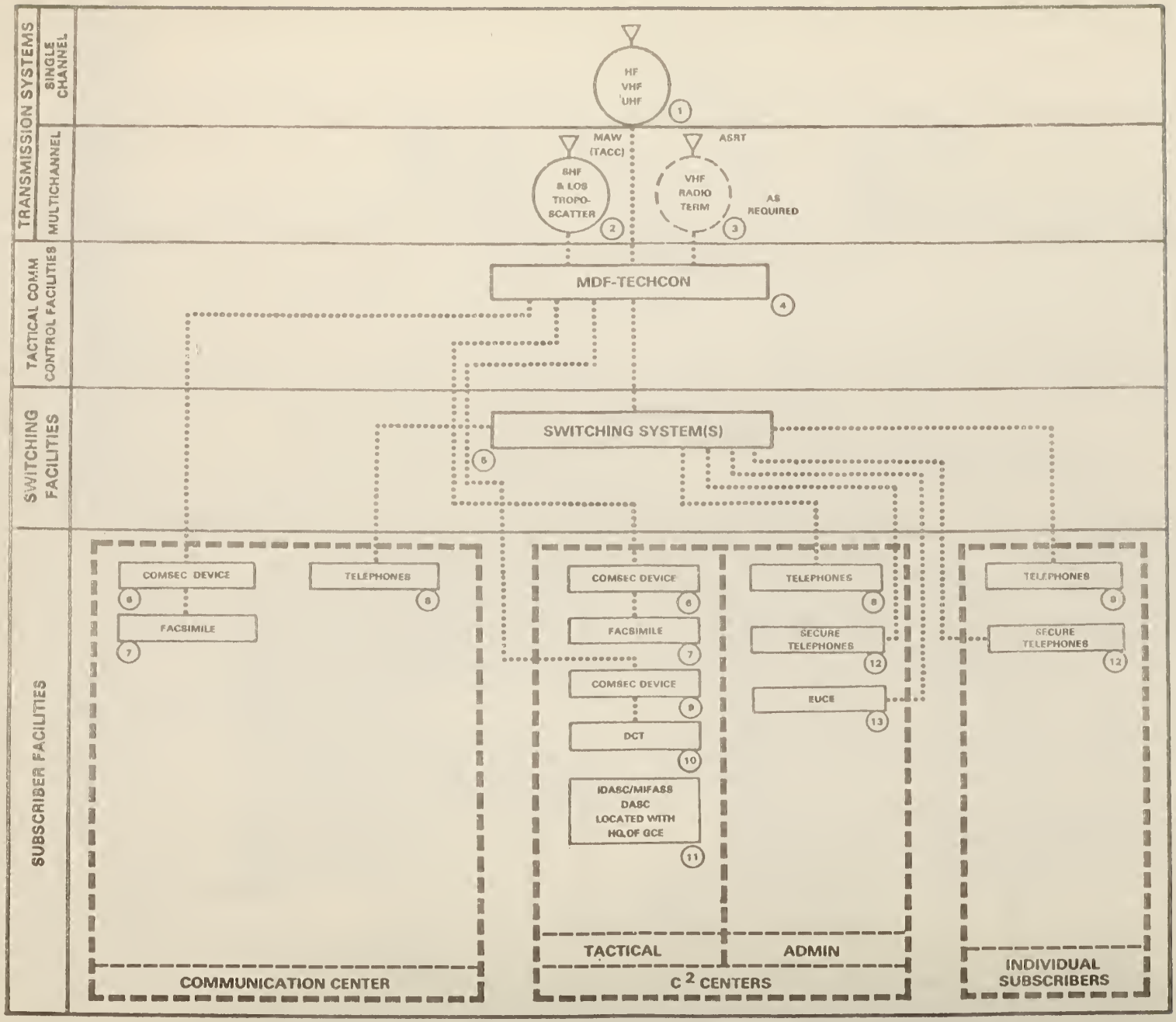

Figure 5-24. Marine Air Support Squadron Node, 1992-1996

Systems/Equipment in Use and Projected Replacements 1992-1996

Single Channel Radios

1. HF: Radio Terminal Set AN/MRC-138.
   Radio Set AN/GRC-193.
   Radio Set AN/PRC-104.

   VHF: Radio Set AN/PRC-77. To be replaced by Radio Set AN/PRC-119 (SINCGARS) starting 1994.
   Radio Set AN/VRC-12. To be replaced by Radio Set AN/VRC-89 (SINCGARS) starting 1994.

   UHF: Radio Terminal Set AN/GRC-171A(V)2
   Radio Terminal Set AN/MRC-138(UHF).
   Radio Set AN/PRC-113.

Multichannel Radios

2. SHF: Troposcatter Radio Set AN/TRC-170(V)3. IOC 1992. Replaces Radio Set AN/GRC-201.
3. VHF: Radio Terminal Set AN/MRC-139. To replace Radio Set AN/MRC-135 starting 1992.

Other Systems/Equipment

4. Main Distribution Frame-Technical Control.
5. Switching Systems. Automatic Telephone Switching Unit SB-3865(P)/TT, (ULCS).
6. Dedicated Loop Encryption Device (DLED) TSEC/KG-84C.
7. Tactical Facsimile Set AN/UXC-7.
8. Telephones. Digital Nonsecure Voice Terminal (DNVT) TA-954.
9. VINSON Security Equipment TSEC/KY-57.
10. Digital Communications Terminal (DCT) AN/PSC-2.
11. Improved Direct Air Support Central (IDASC) to be replaced by Marine Integrated Fire and Air Support System (MIFASS) starting in 1992.
12. Secure Telephones. Digital Subscriber Voice Terminal (DSVT) TSEC/KY-68.
13. End Use Computing Equipment (EUCE).

Figure 5-24. Marine Air Support Squadron Node, 1992-1996 (con't)

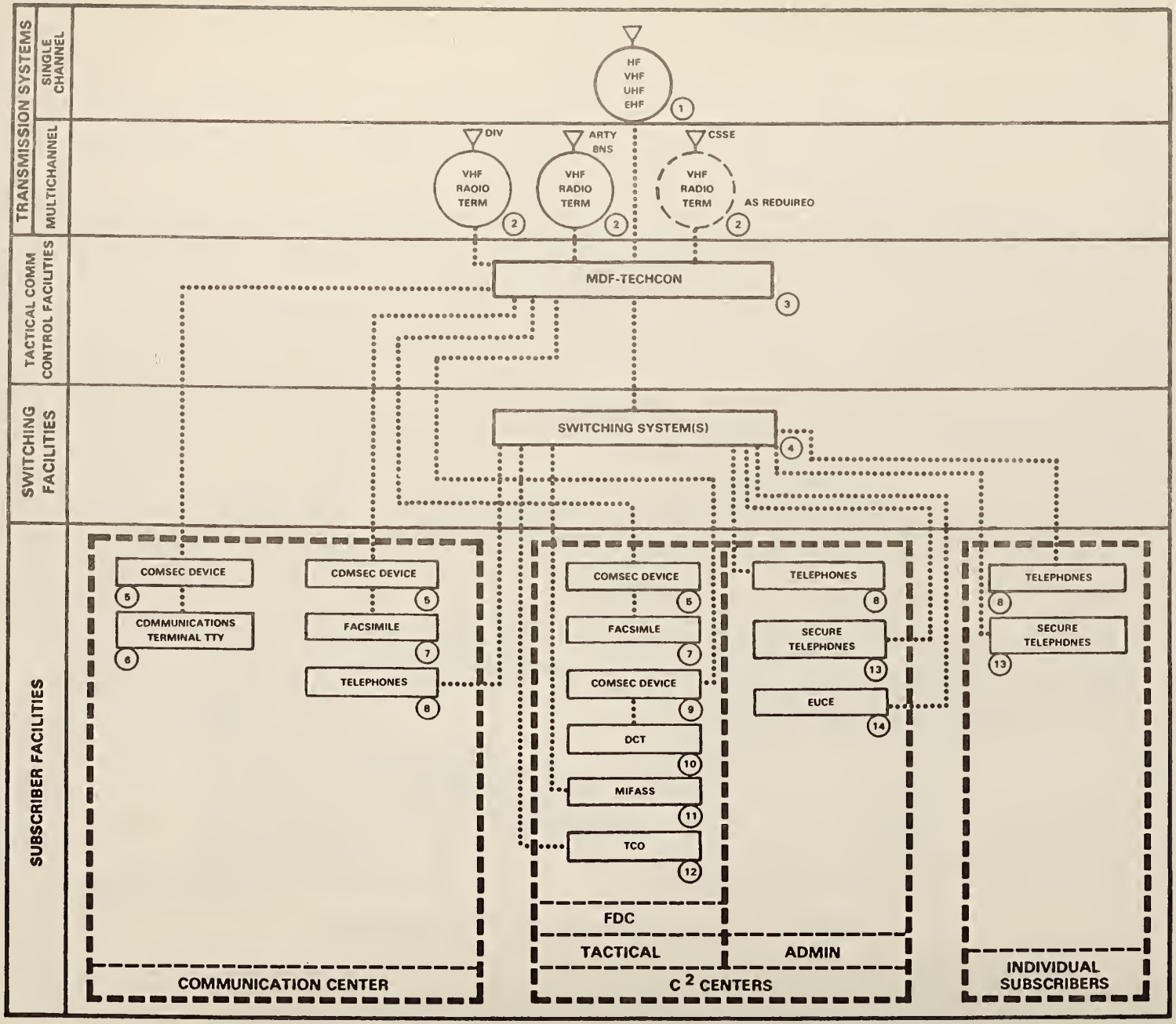

Figure 5-25. Artillery Regimental Headquarters Node, 1992-1996

Systems/Equipment in Use and Projected Replacements 1992-1996

Single Channel Radios

1. HF: Radio Terminal Set AN/MRC-138.
   Radio Set AN/PRC-104.
   VHF: Radio Set AN/PRC-68.
   Radio Set AN/PRC-77. To be replaced by Radio Set AN/PRC-119 (SINCGARS) starting 1994.
   Radio Set AN/VRC-12. To be replaced by Radio Set AN/VRC-89 (SINCGARS) starting 1994.
   UHF: Radio Terminal Set AN/MRC-138(UHF).
   Radio Set AN/PRC-113.
   Radio Set AN/VRC-83.
   EHF: Single Channel Objective Tactical Terminal (SCOTT). IOC 1993.

Multichannel Radios

2. VHF: Radio Terminal Set AN/MRC-139. To replace Radio Set AN/MRC-135 starting 1992.

Other Systems/Equipment

3. Main Distribution Frame and Technical Control.

Other Systems/Equipment (Cont'd)

4. Switching Systems. Automatic Telephone Central Office, AN/TTC-42 (ULCS). The Automatic Message Switching Set, AN/GYC-7, (ULMS), to be fielded during this period may be used in conjunction with the AN/TTC-42.
5. Dedicated Loop Encryption Device (DLED) TSEC/KG-84C.
6. Communications Terminal AN/UGC-74A(V)3.
7. Tactical Facsimile Set AN/UXC-7.
8. Telephones. Digital Nonsecure Voice Terminal (DNVT) TA-954.
9. VINSON Security Equipment TSEC/KY-57.
10. Digital Communications Terminal (DCT) AN/PSC-2.
11. Marine Integrated Fire and Support System (MIFASS) AN/UYQ-38(V). IOC 1992.
12. Tactical Combat Operations (TCO) System. IOC 1994.
13. Secure Telephones. Digital Subscriber Voice Terminal (DSVT) TSEC/KY-68.
14. End Use Computing Equipment (EUCE).

NOTE: This figure does not include required communications equipment if the artillery regimental command post is to function as the alternate division command post.

Figure 5-25. Artillery Regimental Headquarters Node, 1992-1996 (con't)

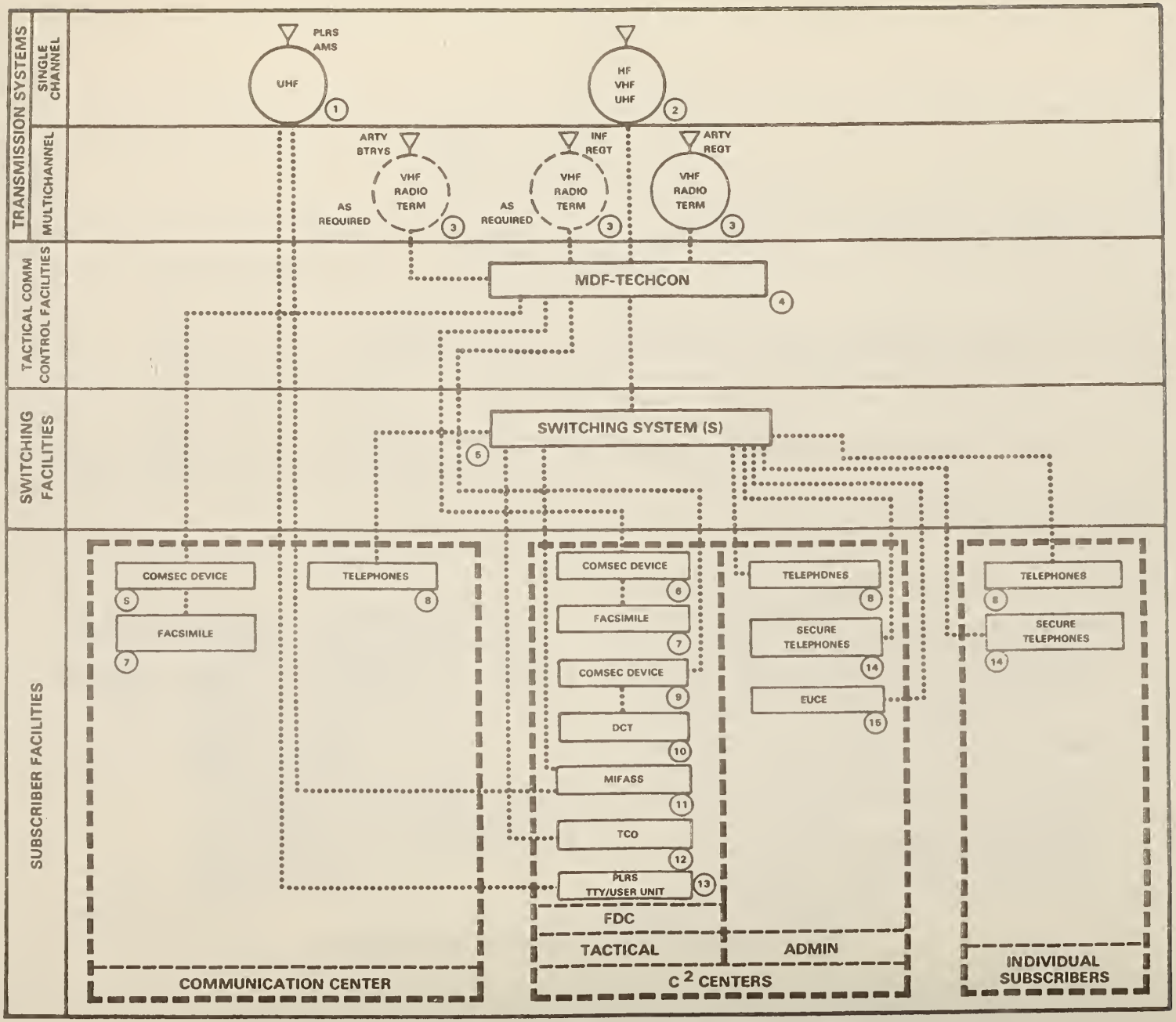

Figure 5-26. Artillery Battalion Headquarters Node, 1992-1996

Systems/Equipment in Use and Projected Replacements 1992-1996

Single Channel Radios

1. UHF: Master Station, Position Location Reporting System, (PLRS) AN/TSQ-129. Alternate Master Station. Direct support battalions only.
2. HF: Radio Terminal Set AN/MRC-138.
   Radio Set AN/PRC-104.
   VHF: Radio Set AN/PRC-68.
   Radio Set AN/PRC-77. To be replaced by Radio Set AN/PRC-119 (SINCGARS) starting 1994.
   Radio Set AN/VRC-12. To be replaced by Radio Set AN/VRC-89 (SINCGARS) starting 1994.
   UHF: Radio Terminal Set AN/MRC-138(UHF).
   Radio Set AN/PRC-113.

Multichannel Radios

3. VHF: Radio Terminal Set AN/MRC-139. To replace Radio Set AN/MRC-135 starting 1992.

Other Systems/Equipment

4. Main Distribution Frame and Technical Control.
5. Switching Systems. Automatic Telephone Switching Unit, SB-3865(P)/TT, (ULCS). The Automatic Message Switching Set, AN/GYC-7, (ULMS), to be fielded during this period may be used in conjunction with the SB-3865(P)/TT.

Other Systems/Equipment (Cont'd)

6. Dedicated Loop Encryption Device (DLED) TSEC/KG-84C.
7. Tactical Facsimile Set AN/UXC-7.
8. Telephones. With the introduction of switches capable of servicing digital telephones, the Digital Nonsecure Voice Terminal (DNVT) TA-954 will replace Telephone Set TA-838( )/TT on nonsecure circuits.
9. VINSON Security Equipment TSEC/KY-57.
10. Digital Communications Terminal (DCT) AN/PSC-2.
11. Marine Integrated Fire and Support System (MIFASS) AN/UYQ-38(V). IOC 1992.
12. Tactical Combat Operations (TCO) System. IOC 1994.
13. Radio Set, Manpack, PLRS AN/PSQ-4//Radio Set, Vehicle, PLRS AN/VSQ-1//Communications Terminal AN/UGC-74A-(V)3.
14. Secure Telephones. Digital Subscriber Voice Terminal (DSVT) TSEC/KY-68.
15. End Use Computing Equipment (EUCE).

Figure 5-26. Artillery Battalion Headquarters Node, 1992-1996 (con't)

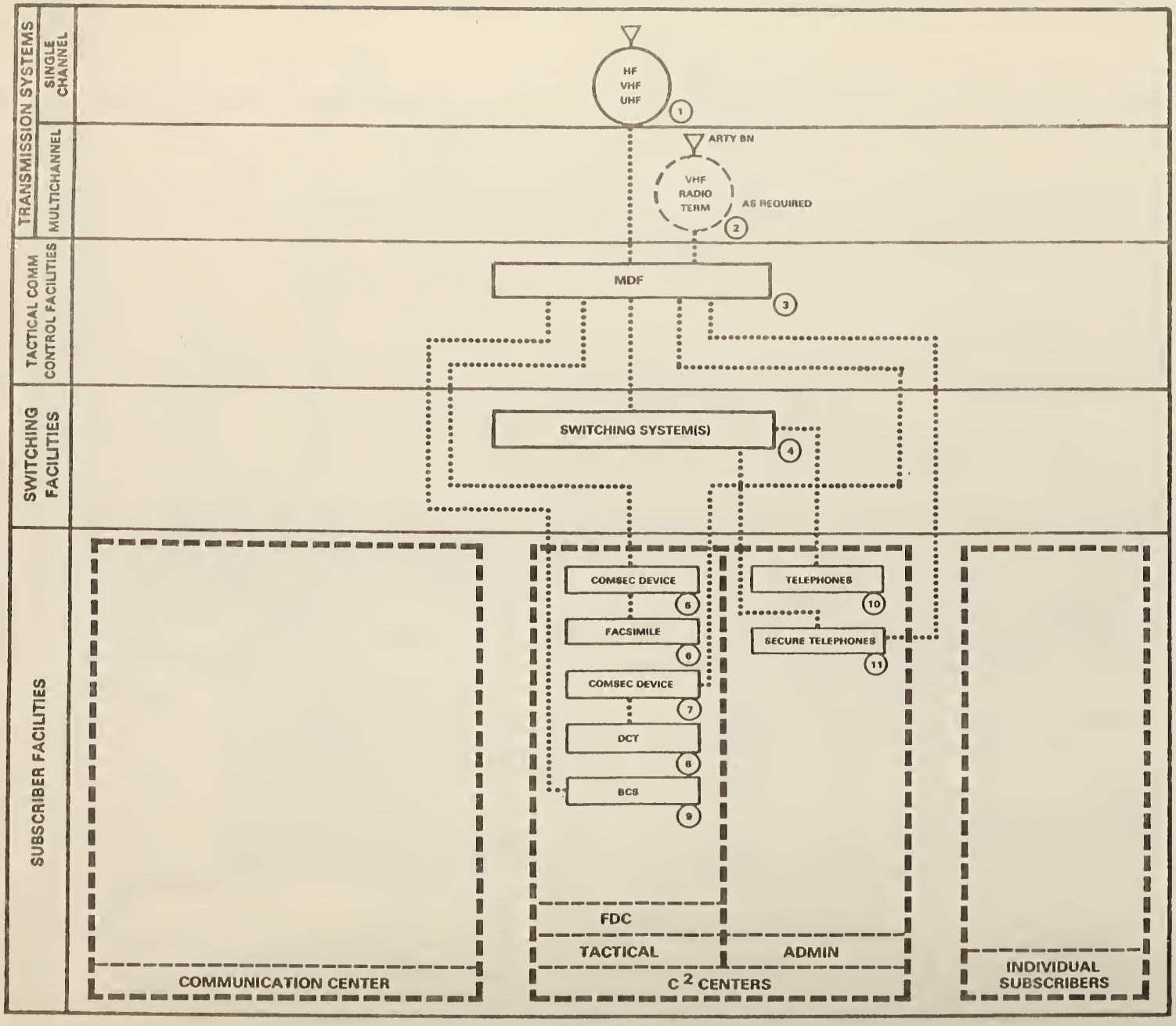

Figure 5-27. Artillery Battery Node, 1992-1996

Systems/Equipment in Use and Projected Replacements 1992-1996

Single Channel Radios

1. HF: Radio Terminal Set AN/MRC-138.
   Radio Set AN/PRC-104.
   VHF: Radio Set AN/PRC-68.
   Radio Set AN/PRC-77. To be replaced by Radio Set AN/PRC-119 (SINCGARS) starting 1994.
   Radio Set AN/VRC-12. To be replaced by Radio Set AN/VRC-89 (SINCGARS) starting 1994.
   UHF: Radio Terminal Set AN/MRC-138(UHF).
   Radio Set AN/PRC-113.

Multichannel Radios

2. VHF: Radio Terminal Set AN/MRC-139. To replace Radio Set AN/MRC-135 starting 1992.

Other Systems/Equipment

3. Main Distribution Frame-Technical Control.
4. Switching Systems. During this period a switchboard capable of servicing digital telephones will be provided. The system is to be determined.
5. Dedicated Loop Encryption Device (DLED) TSEC/KG-84C.
6. Tactical Facsimile Set AN/UXC-7.
7. VINSON Security Equipment TSEC/KY-57.
8. Digital Communications Terminal (DCT) AN/PSC-2.
9. Battery Computer System AN/GYK-29.
10. Telephones. Digital Nonsecure Voice Terminal (DNVT) TA-954.
11. Secure Telephones. Digital Subscriber Voice Terminal (DSVT) TSEC/KY-68.

Figure 5-27. Artillery Battery Node, 1992-1996 (con't)

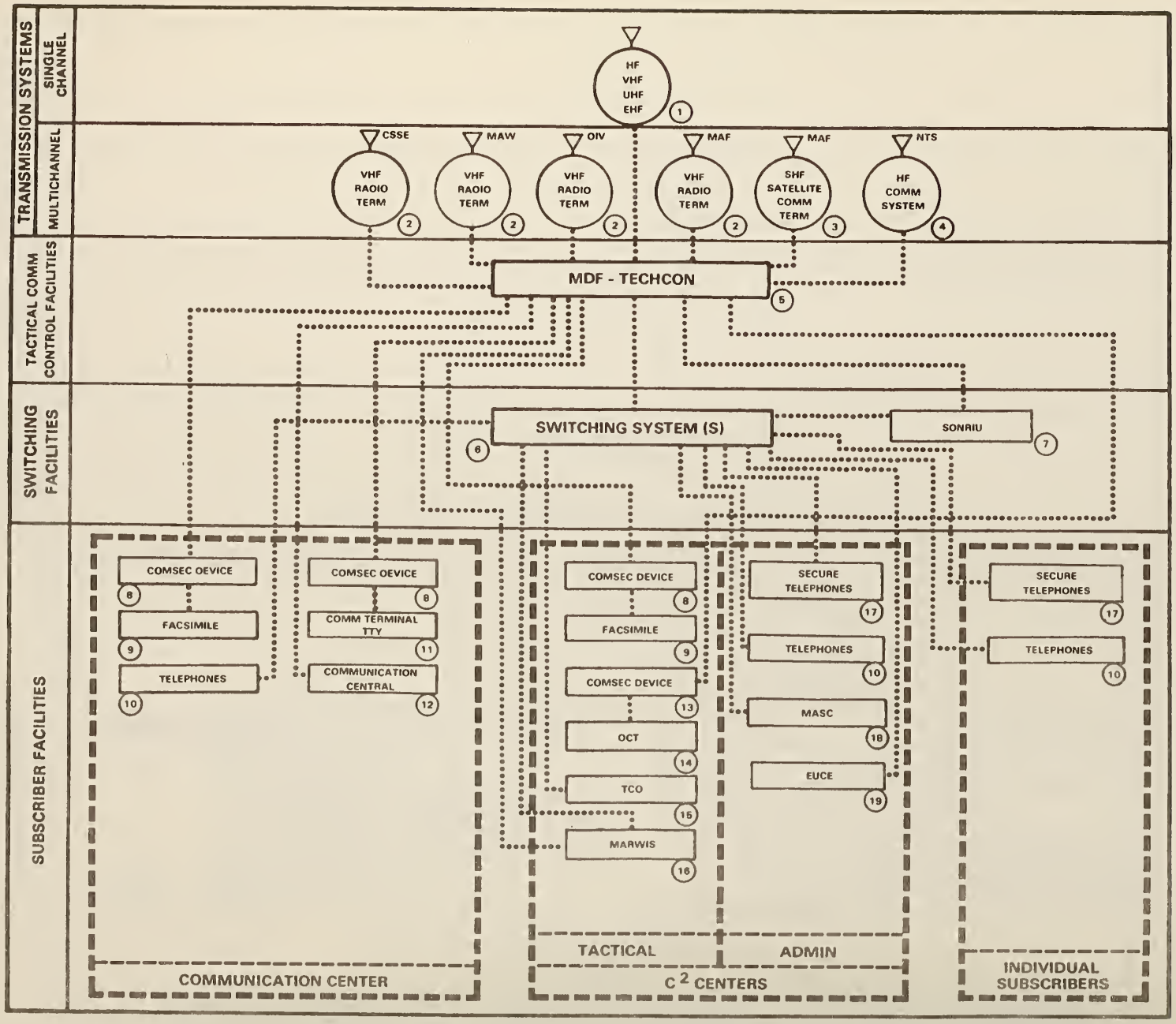

Figure 5-28. Force Service Support Group Headquarters Node, 1992-1996

Systems/Equipment in Use and Projected Replacements 1992-1996

Single Channel Radios

1. HF: Radio Terminal Set AN/MRC-138.
   Radio Set AN/PRC-104.
   VHF: Radio Set AN/PRC-68.
   Radio Set AN/PRC-77. To be replaced by Radio Set AN/PRC-119 (SINCGARS) starting 1994.
   Radio Set AN/VRC-12. To be replaced by Radio Set AN/VRC-89 (SINCGARS) starting 1994.
   UHF: Radio Set AN/PRC-113.
   Radio Set, AN/VRC-83.
   EHF: Single Channel Objective Tactical Terminal (SCOTT). IOC 1993.

Multichannel Radios

2. VHF: Radio Terminal Set AN/MRC-139. To replace Radio Set AN/MRC-135 starting 1992.
3. SHF: Ground Mobile Forces Satellite Communications Terminal AN/TSC-93A.
4. HF: High Frequency Communications Terminal (HFCT).

Other Systems/Equipment

5. Main Distribution Frame and Technical Control. During this period Communications Technical Control Center AN/TSQ-84 will be upgraded, augmented and/or replaced with systems, to be determined, that will provide the required interfaces.

Other Systems/Equipment (Cont'd)

6. Switching Systems. Automatic Telephone Central Office, AN/TTC-42, (ULCS). The Automatic Message Switching Set, AN/GYC-7, (ULMS), to be fielded during this period may be used in conjunction with the AN/TTC-42.
7. Secure Digital Net Radio Interface Unit (SDNRIU), TSEC/KY-90.
8. Dedicated Loop Encryption Device (DLED) TSEC/KG-84C.
9. Tactical Facsimile Set AN/UXC-7.
10. Telephones. Digital Nonsecure Voice Terminal (DNVT) TA-954.
11. Communications Terminal AN/UGC-74A(V)3.
12. Communications Central AN/MSC-63A
13. VINSON Security Equipment, TSEC/KY-57.
14. Digital Communications Terminal (DCT) AN/PSC-2.
15. Tactical Combat Operations (TCO) System. IOC 1994.
16. Marine Corps WWMCCS Information System (MARWIS) Terminal.
17. Secure Telephones. Digital Subscriber Voice Terminal (DSVT) TSEC-KY-68.
18. Deployable Force Automated Service Center (DFASC).
19. End Use Computing Equipment (EUCE).

Figure 5-28. Force Service Support Group Headquarters Node, 1992-1996 (con't)

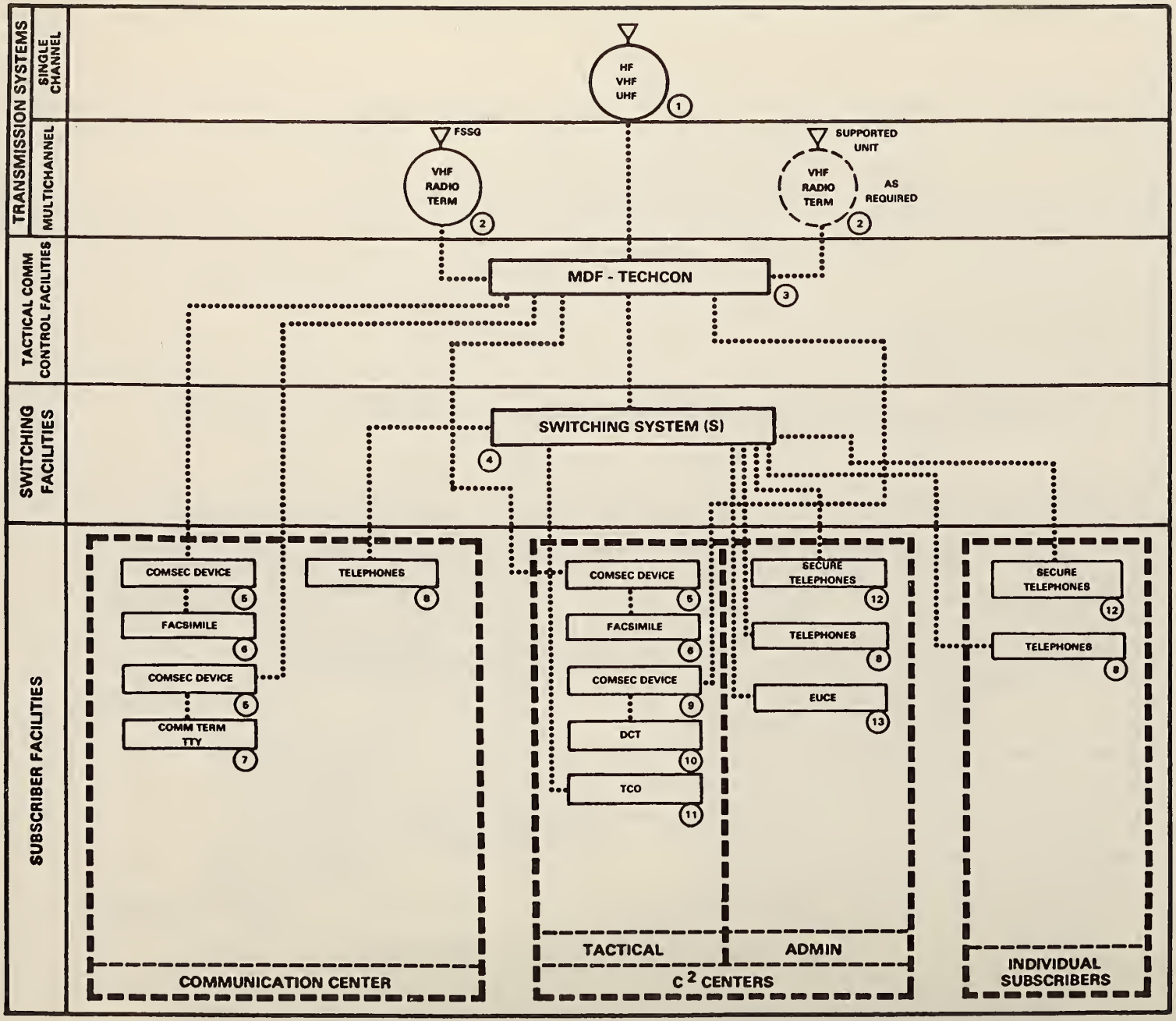

Figure 5-29. Combat Service Support Element Headquarters Node, 1992-1996

Systems/Equipment in Use and Projected Replacements 1992-1996

Single Channel Radios

1. HF: Radio Terminal Set AN/MRC-138.
   Radio Set AN/PRC-104.
   VHF: Radio Set AN/PRC-68.
   Radio Set AN/PRC-77. To be replaced by Radio Set AN/PRC-119 (SINCGARS) starting 1994.
   Radio Set AN/VRC-12. To be replaced by Radio Set AN/VRC-89 (SINCGARS) starting 1994.
   UHF: Radio Terminal Set AN/MRC-138(UHF).
   Radio Set AN/PRC-113.

Multichannel Radios

2. VHF: Radio Terminal Set AN/MRC-139. To replace Radio Set AN/MRC-135 starting 1992.

Other Systems/Equipment

3. Main Distribution Frame and Technical Control.

Other Systems/Equipment (Cont'd)

4. Switching Systems. Automatic Telephone Switchboard SB-3865 (ULCS).
5. Dedicated Loop Encryption Device (DLED) TSEC/KG-84C.
6. Tactical Facsimile Set AN/UXC-7.
7. Communications Terminal AN/UGC-74A(V)3.
8. Telephones. Digital Nonsecure Voice Terminal (DNVT) TA-954.
9. VINSON Security Equipment, TSEC/KY-57.
10. Digital Communications Terminal (DCT) AN/PSC-2.
11. Tactical Combat Operations System (TCO). IOC 1994.
12. Secure Telephones. Digital Subscriber Voice Terminal (DSVT) TSEC/KY-68.
13. End Use Computing Equipment (EUCE).

Figure 5-29. Combat Service Support Element Headquarters Node, 1992-1996 (con't)

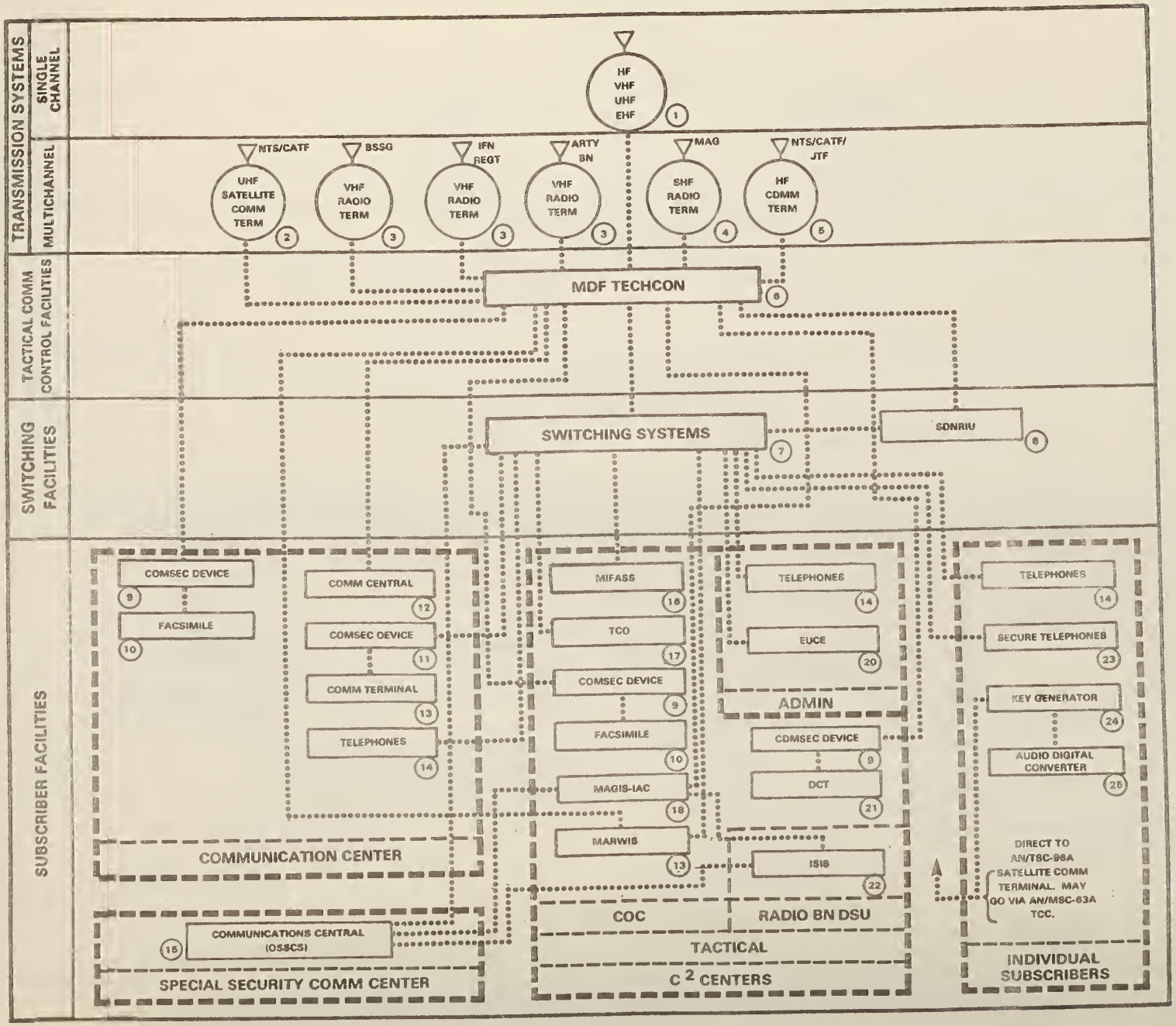

Figure 5-30. Marine Amphibious Brigade Headquarters Node, 1992-1996

Systems/Equipment in Use and Projected Replacements 1992-1996

Single Channel Radios

1. HF: Radio Terminal Set AN/MRC-138.
   Radio Set AN/PRC-104.
   Radio Set AN/GRC-193.
   VHF: Radio Set AN/PRC-68.
   Radio Set AN/PRC-77. To be replaced by Radio Set AN/PRC-119 (SINCGARS) starting 1994.
   Radio Set AN/VRC-12. To be replaced by Radio Set AN/VRC-89 (SINCGARS) starting 1994.
   UHF: Radio Terminal Set AN/MRC-138(UHF).
   Radio Set AN/PRC-113.
   EHF: Single Channel Objective Tactical Terminal (SCOTT). IOC 1993.

Multichannel Radios

2. UHF: Satellite Communications Central AN/TSC-96A
3. VHF: Radio Terminal Set AN/MRC-139. To replace Radio Set AN/MRC-135 starting 1992.
4. SHF: Troposcatter Radio Set AN/TRC-170(V)3. IOC 1992. Replaces Radio Set AN/GRC-201.
5. HF: High Frequency Communications Terminal (HFCT) AN/TSC-120.

Other Systems/Equipment

6. Main Distribution Frame and Technical Control. During this period Communications Technical Control Center AN/TSQ-84 will be upgraded/augmented/replaced with systems, to be determined, that will provide the required interfaces.
7. Switching Systems. Automatic Telephone Central Office, AN/TTC-42, (ULCS). The Automatic Message Switching Set, AN/GYC-7, (ULMS), to be fielded during this period, may be used in conjunction with the AN/TTC-42.

Other Systems/Equipment (Cont'd)

8. Secure Digital Net Radio Interface Unit (SDNRIU), TSEC/KY-90.
9. VINSON Security Equipment TSEC/KY-57.
10. Tactical Facsimile Set AN/UXC-7.
11. Dedicated Loop Encryption Device (DLED) TSEC/KG-84C.
12. Communications Central AN/MSC-63A.
13. Communications Terminal AN/UGC-74A(V)3.
14. Telephones. Digital Nonsecure Voice Terminal (DNVT) TA-954 and the Digital Subscriber Voice Terminal (DSVT) TSEC/KY-68.
15. Communications Central AN/MSC-63A.
16. Marine Integrated Fire and Air Support System (MIFASS). IOC 1992.
17. Tactical Combat Operations (TCO) System. IOC 1994.
18. Marine Air-Ground Intelligence System-Intelligence Analysis Center (MAGIS-IAC) AN/TYQ-19(V).
19. Marine Corps WWMCCS Information System (MARWIS) Terminal.
20. End Use Computing Equipment (EUCE).
21. Digital Communications Terminal (DCT) AN/PSC-2.
22. Integrated Signals Intelligence System (ISIS), Technical Control and Analysis Center (TCAC), AN/TSQ-130.
23. The DSVT TSEC/KY-68 will be used where secure telephones are required.
24. Key Generator TSEC/KG-36.
25. Audio Digital Converter CV-3333/U.

Figure 5-30. Marine Amphibious Brigade Headquarters Node, 1992-1996 (con't)

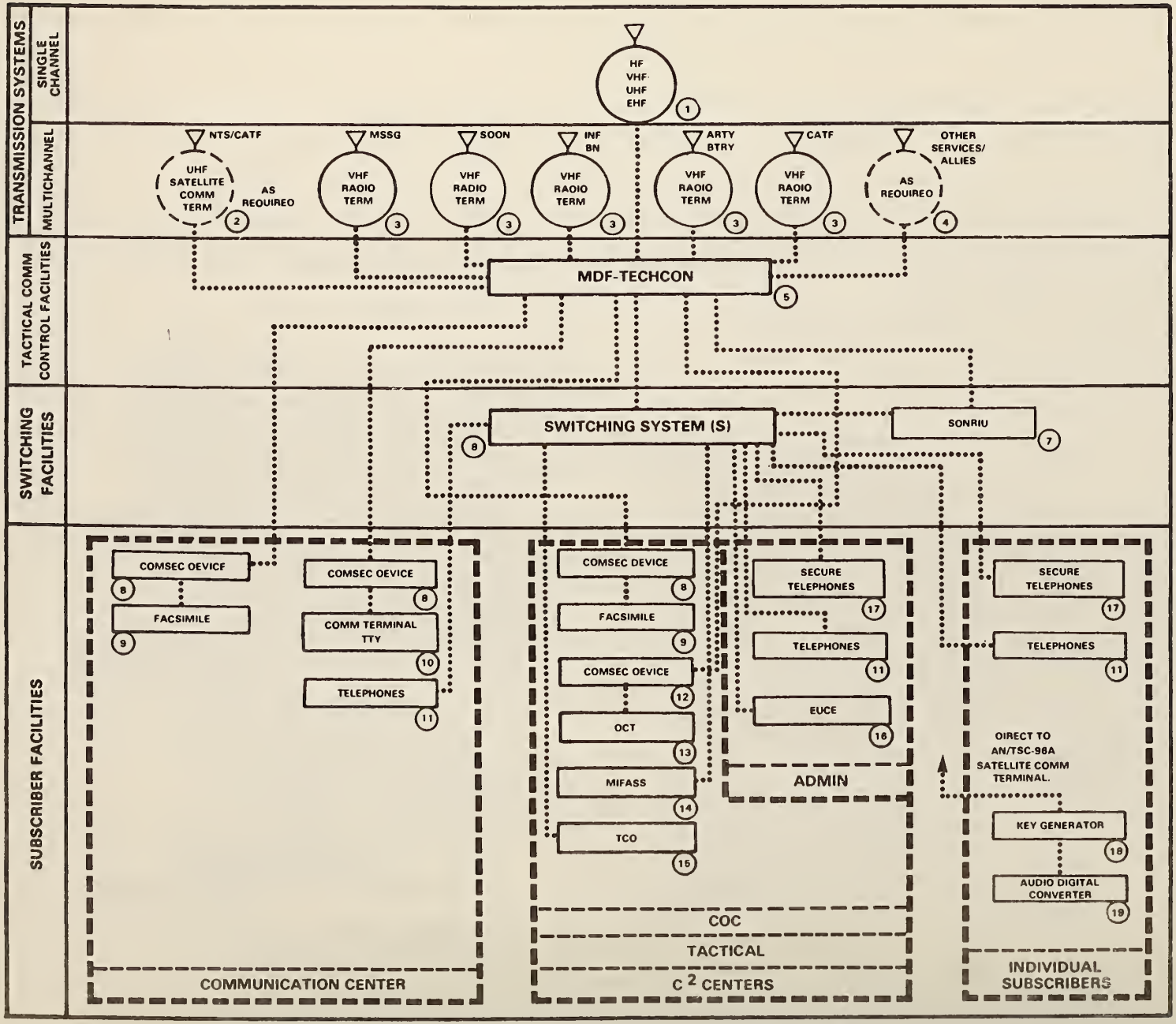

Figure 5-31. Marine Amphibious Unit Headquarters Node, 1992-1996

Systems/Equipment in Use and Projected Replacements 1992-1996

Single Channel Radios

1. HF: Radio Terminal Set AN/MRC-138.
   Radio Set AN/PRC-104.
   VHF: Radio Set AN/PRC-77. To be replaced by Radio Set AN/PRC-119 (SINCGARS) starting 1994.
   Radio Set AN/VRC-12. To be replaced by Radio Set AN/VRC-89 (SINCGARS) starting 1994.
   Radio Set AN/PRC-68.
   UHF: Radio Terminal Set AN/MRC-138(UHF).
   Radio Set AN/PRC-113.
   Manpack Satellite Terminal AN/PSC-3.
   Radio Set AN/VRC-83.
   EHF: Single Channel Objective Tactical Terminal (SCOTT) IOC 1993.

Multichannel Radios

2. UHF: Satellite Communications Central AN/TSC-96A (As Required).
3. VHF: Radio Terminal AN/MRC-139. To replace Radio Set AN/MRC-135 starting 1992.
4. As required for communications with other Services/allies.

Other Systems/Equipment

5. Main Distribution Frame and Technical Control.
6. Switching Systems. Automatic Telephone Switchboard, SB-3865(P)/TT, (ULCS). The Automatic Message Switching Set, AN/GYC-7, (ULMS), to be fielded during this period, may be used in conjunction with the SB-3865(P)/TT.

Other Systems/Equipment (Cont'd)

7. Secure Digital Net Radio Interface Unit (SDNRIU), TSEC/KY-90.
8. Dedicated Loop Encryption Device (DLED) TSEC/KG-84C.
9. Tactical Facsimile Set AN/UXC-7.
10. Communications Terminal AN/UGC-74A(V)3.
11. Telephones. Digital Nonsecure Voice Terminal (DNVT) TA-954 and the Digital Subscriber Voice Terminal (DSVT) TSEC/KY-68.
12. VINSON Security Equipment TSEC/KY-57.
13. Digital Communications Terminal (DCT) AN/PSC-2.
14. Marine Integrated Fire and Air Support System (MIFASS) IOC 1992.
15. Tactical Combat Operations (TCO) System. IOC 1994.
16. Secure Telephones. Digital Subscriber Voice Terminal (DSVT) TSEC/KY-68.
17. End Use Computing Equipment (EUCE).
18. Key Generator TSEC/KG-36. (As Required)
19. Audio Digital Converter CV-3333/U. (As Required)

Figure 5-31. Marine Amphibious Unit Headquarters Node, 1992-1996 (con't)

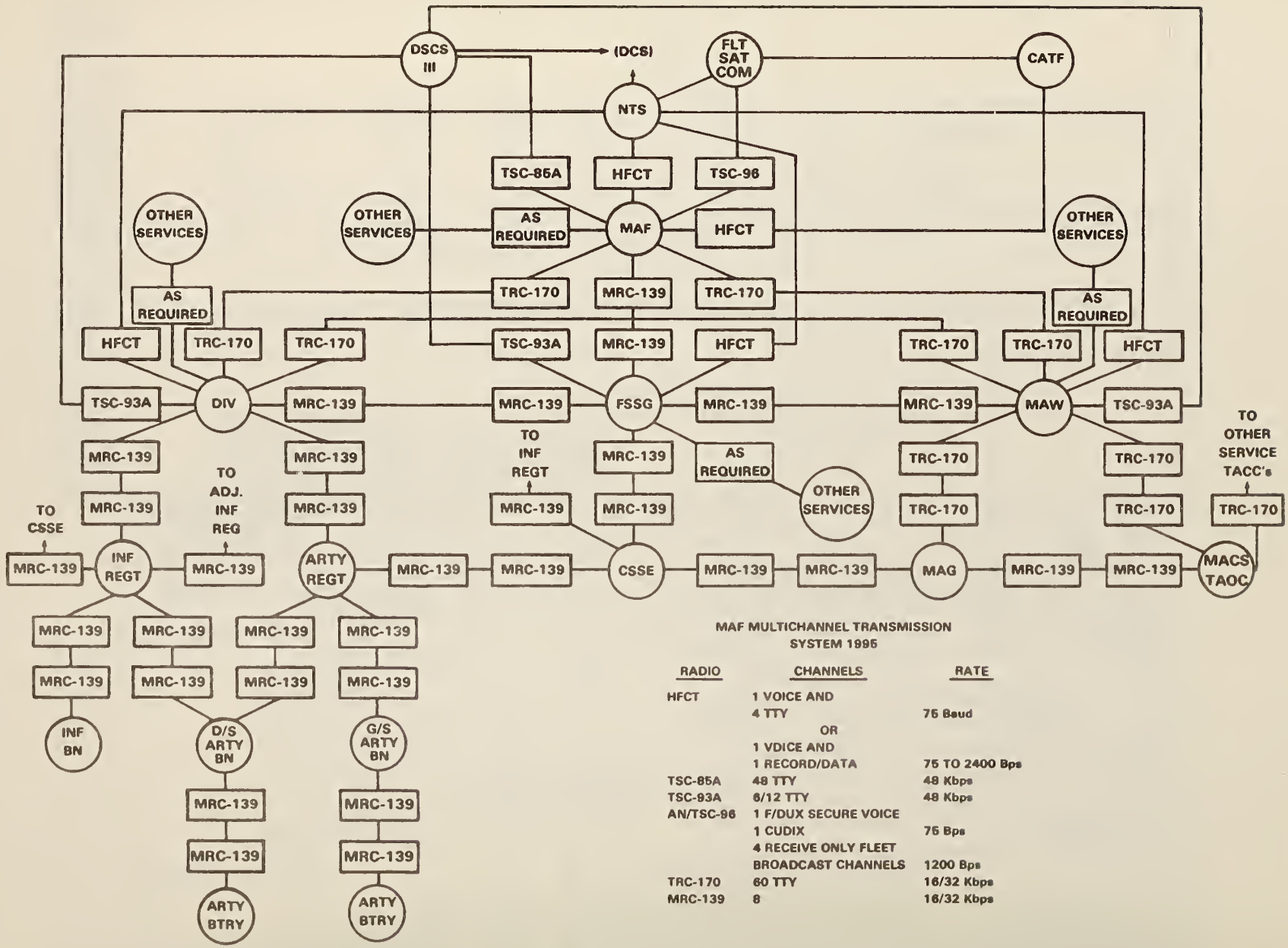

MAF MULTICHANNEL TRANSMISSION SYSTEM 1995

RADIO	CHANNELS	RATE
HFCT	1 VOICE AND	
	4 TTY	75 Baud
	OR	
	1 VOICE AND	
	1 RECORD/DATA	75 TO 2400 Bps
TSC-85A	48 TTY	48 Kbps
TSC-93A	6/12 TTY	48 Kbps
AN/TSC-96	1 F/DUX SECURE VOICE	
	1 CUDIX	75 Bps
	4 RECEIVE ONLY FLEET	
	BROADCAST CHANNELS	1200 Bps
TRC-170	60 TTY	16/32 Kbps
MRC-139	8	16/32 Kbps

Figure 5-32. MAF Multichannel Transmission System, 1995

508 COMMUNICATION ARCHITECTURE PROJECTION 1997-2001

The projected status of the communication architecture during the 1997-2001 time frame is described in this section. By the start of this period, the Marine Corps communication system will have completed the transition to a fully-digital communication system. The variety of equipment necessary to communicate in the all-digital environment will be significantly reduced over that required in the hybrid analog/digital environment of the previous period.

The trend in network control will be away from centralized facilities, such as switches and technical control centers, toward more distributed means, such as that provided by JTIDS, which provide improved network survivability. More sophisticated electronic warfare techniques will require the use of equally-advanced countermeasures in order to meet the threat.

508.1 New Equipment. Many of the new systems described in this section are conceptual and describe only one of several directions that future communication system developments may take. One additional alternative direction, possible Marine Corps adoption of the Mobile Subscriber Equipment (MSE), is discussed in section 509. Prospective IOCs for the new systems listed below have not been established.

NEW ITEM	REPLACES	IOC
Subscriber Facilities		
Terminal Equipment and Tactical Data Systems		
Modular Universal Workstation	Most terminal equipment subscriber equipment, and tactical data systems.	TBD
Switching and Technical Control Equipment		
Modular switch with improved capability to provide simultaneous voice, data and video service and including an integrated technical control facility.	AN/TTC-42, SB-3865 AN/GYC-7	TBD
Universal Communications Security Device	Existing communications security devices.	TBD
Technical Control and Interface Module	New Item	TBD
Transmission Systems		
Single-Channel Radios		
AN/PRC( )	AN/MRC-138 AN/PRC-104 AN/GRC-193 AN/URC-97(V)2	TBD

NEW ITEM	REPLACES	IOC
AN/VRC( )	AN/VRC-SINCGARS TSEC/KY-67 BANCROFT AN/MRC-138(UHF) AN/GRC-171A(V)2 AN/VRC-83 AN/PSC-3 AN/USC-7	TBD
Multichannel Radios		
JTIDS Class 3 Terminal	To Be Determined	TBD
EHF Multichannel System	AN/TSC-85A AN/TSC-93A AN/TSC-96(V)	TBD

508.2 Subscriber Facilities

508.2.1 Telephones. Telephone service will be provided primarily by the DSVT, TSEC/KY-68 and the DNVT, TA-954.

508.2.2 Tactical Data Systems and Communication Centers. By the year 2000 many TDSs, communication centers, and automated information systems, will evolve into a family of modular universal workstations. These workstations will vary in complexity and size from a simple, hand-held device, to terminals capable of supporting large screen displays. Although various users will have different requirements for workstations, most requirements will be satisfied with the following types of modules:

- Applications processors.
- Standard displays.
- Large screen displays.
- Mass storage devices capable of rapid information retrieval.
- Universal COMSEC modules.
- Standard keyboards.
- Mouse-type, touch-sensitive input devices.
- Analog to Digital (A-D) conversion modules.
- Fiber Optic interfaces.

Key elements to the successful use of workstations will be their architecture and the maximum use of common modular components to reduce logistics and life-cycle costs. Mass data storage facilities will permit the on-line storage of centrally controlled data bases. They will also permit external access while denying configuration changes without the knowledge and approval of the data base manager or owner. The workstations will include a

modularly-expandable family of advanced microcomputers for applications-oriented processing. These computers will replace unique equipment used by TDSs and deployable AISs.

508.3 Switching Facilities. The ULCS and the ULMS will be replaced with an integrated services digital network (ISDN) switch. This switch will significantly improve the capabilities of the Marine Corps by providing simultaneous voice, data, and video service. The switch size will be predicated on the number of subscribers who require voice, data, and graphics service, rather than a specified number of lines. Optimally, the switch should have the capability to be expanded or contracted in a fixed number of line increments to support the various MAGTF commanders. The ISDN switch will be designed for transmission of broadband signals using fiber optics for both intracommand post area networks and for intercommand post communications.

508.4 Tactical Communication Control Facilities. Assuming an integrated systems approach for communications in the year 2000, as described above, a separate facility for COMMCON will no longer be required. The new generation of ISDN switches will have an integrated technical control facility to monitor the status of transmission facilities and switch circuits. Reports are generated automatically by the switch and sent to the designated COMMCON agency which is simply a C^2 center with an applications processor programmed for that purpose. COMMCON will be based on distributed control of resources with centralized planning and, where necessary, manual intervention. The network is self-disciplined and management is by exception. However, such a system requires that the data necessary for network configuration and control of the ISDN switches be updated periodically, depending on the requirements of the supported C^2Es and AEs. The integrated monitor and test capability within the ISDN switch is predicated on a functional control core which can support both switching and COMMCON. The control core can be added to incrementally, providing loops and trunks to optimize sizing based on command requirements. The switch and COMMCON are designed around fiber optic links, virtually eliminating the need for copper wire. Individual single-channel and multichannel radios will be provided with a TECHCON and interface module capable of selectively controlling the radio by providing telemetry that will regulate circuit quality and equipment performance.

508.5 Transmission Systems

508.5.1 Multichannel Systems. During this period, the AN/MRC-139 may be replaced with improved JTIDS terminals or a system with similar capabilities for intratheater communications. Satellite multichannel systems will be replaced with an improved EHF multichannel satellite system. An improved HF multichannel radio central also will contribute to network survivability and range extension.

508.5.1.1 Troposcatter Radio Set AN/TRC-170(V)3. The AN/TRC-170 will continue to be the backbone troposcatter system for communications within the theater. A TECHCON and interface module will be integrated into the radio.

508.5.1.2 Joint Tactical Information Distribution System (JTIDS). During this period, the JTIDS terminals will be improved by a TECHCON and interface

module and a fiber optic multiplexer/demultiplexer. A JTIDS Class 3 terminal in manpack and vehicular configurations may be introduced.

508.5.1.3 High Frequency Communication Terminal. The HFCT will continue to be used during this period. It will be integrated with a TECHCON and interface module. The radio will be integrated with the fiber optic links to report automatically to the controller portion of the ISDN switch.

508.5.2 Single-Channel Systems

508.5.2.1 AN/PRC-104 Family of Radios. These radios will be replaced with a substantially-improved, lighter weight HF radio capable of supporting digital data and voice communications.

508.5.2.2 VHF and UHF Radios. VHF and UHF radios in service at the beginning of this period will be replaced by an integrated single-channel radio, thereby reducing the number of different types of single-channel radios required. These radios can function with an airborne retransmission system providing for increased range of VHF/UHF coverage.

508.5.2.3 Satellite Communication Systems. Because of its vulnerability, the AN/TSC-96 satellite communications system may be augmented by an airborne UHF retransmission system.

508.5.2.4 Single Channel Objective Tactical Terminal (SCOTT). SCOTT will receive a product upgrade to include TECHCON and interface with the fiber optic system to make it fully functional with the ISDN switch. The ISDN switch will select a channel from either the HFCT or the SCOTT on a call-by-call basis to preserve the common user nature of the transmission system for intertheater communications. Interoperability with allied forces will be accomplished through the HFCT or the SCOTT and may require a unique interface device.

508.6 System Nodal Diagrams. Figures 5-33 through 5-48 depict the communication architecture for selected type nodes during the 1997-2001 time period. Figure 5-34 depicts a MAF headquarters node in the year 2001 configured with universal workstation modules and with the communication system as it may exist at that time.

a. Although most links between nodes are represented by multichannel radio equipment in each of the nodal diagrams, fiber optic cable may be used in instances where it is satisfactory. Single-channel net radio will be used and JTIDS may be used in the early phases of an amphibious landing, in operations involving rapidly moving forces, and other circumstances when multichannel radio or cable are impractical.

b. Figure 5-49 is an overview of the multichannel transmission system for the 1997-2001 period. It depicts the channels and transmission rates for equipment used for each link, as depicted in the nodal diagrams.

THIS PAGE INTENTIONALLY LEFT BLANK

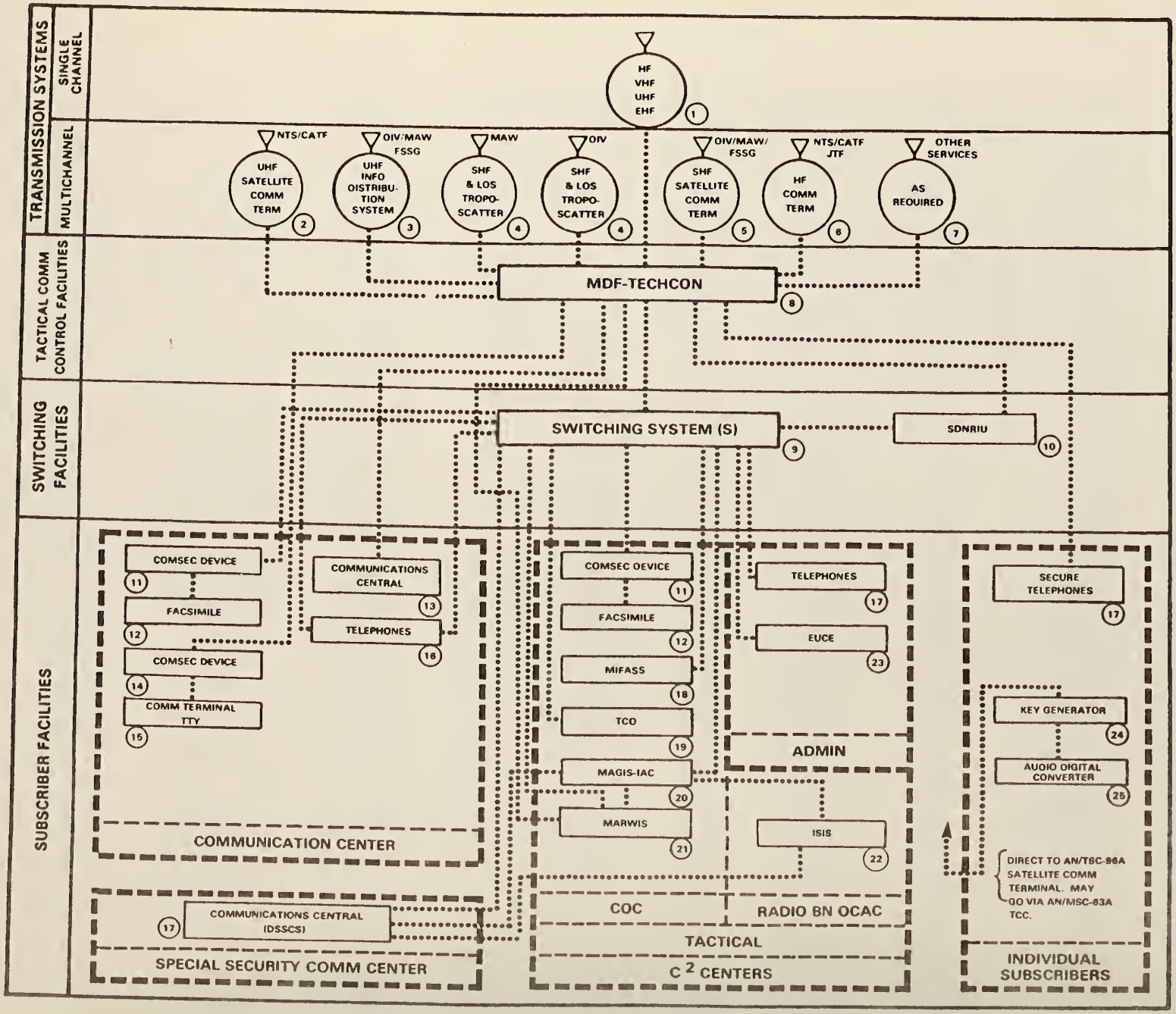

Figure 5-33. Marine Amphibious Force Headquarters Node 1997-2001

Systems/Equipment in Use and Projected Replacements, 1997-2001

Single Channel Radios

1. HF: Radios AN/MRC-138, AN/PRC-104, AN/GRC-193 and Receiver R-2174 in use at the start of this period will be replaced by an improved HF radio capable of supporting digital voice and data communications.

   VHF/UHF: VHF radios AN/GRC-SINCGARS and UHF radios, AN/MRC-138 (UHF), AN/GRC-171A (V)2, AN/VRC-83 and AN/VRC-7 will be replaced by an integrated VHF/UHF radio.

   EHF: Single Channel Objective Tactical Terminal (SCOTT).

Multichannel Radios

2. UHF: Satellite Communications Central AN/TSC-96A to be replaced by SCOTT with multiplex product improvement to provide multichannel capability.
3. VHF: Radio Set AN/MRC-139 may be replaced by JTIDS terminal or similar capability.
4. SHF: Troposcatter Radio Set AN/TRC-170(V)3 (Improved).
5. EHF: Satellite Communications Terminal AN/TSC-85A to be replaced by an EHF multichannel satellite system terminal.
6. HF: High Frequency Communication Terminal (HFCT) AN/TSC-120.
7. Systems as required to communicate with other Services/allies.

Other Systems/Equipment

8,9,10. Main Distribution Frame, Technical Control Facilities, and Switching Systems. The AN/TTC-42 and SB-3865 switchboards will be replaced by a system that will significantly improve the capability to provide simultaneous voice, data, and video service and that will also provide an integrated technical control facility; e.g., an integrated services digital network (ISDN) switch and controller. Individual single channel and multichannel radios will be provided with a technical control and interface module, which will provide telemetry regulating circuit quality and equipment performance, capable of selectively controlling the radio.

Other Systems/Equipment (Cont'd)

11. VINSON Security Equipment TSEC/KY-57. To be replaced by a universal security module.
12. Tactical Facsimile Set AN/UXC-7. To be replaced by UWSM.*
13. Communications Central AN/MSC-63A. May be replaced by UWSM.*
14. DLED TSEC/KG-84C to be replaced by a universal security module.
15. Communications Terminal AN/UGC-74A(V)3. May be replaced by UWSM.*
16. Telephones. The Digital Nonsecure Voice Terminal (DNVT) TA-954 and the Digital Subscriber Voice Terminal (DSVT) TSEC/KY-68 will continue in use through this period.
17. Communications Central AN/MSC-63A may be replaced by UWSM.*
18. Marine Integrated Fire and Air Support System (MIFASS) AN/UYQ-38(V) may be replaced by UWSM.*
19. Tactical Combat Operations System (TCO) may be replaced by UWSM.*
20. MAGIS IAC AN/TYQ-19(V)to be replaced by an improved IAC. Some functions may be performed on UWSMs.*
21. Marine Corps WWMCCS Information System (MARWIS) Terminal.
22. ISIS SAAS and ISIS CCF. Some functions may be performed by UWSMs but other functions may not lend themselves to performance by UWSM.
23. End Use Computing Equipment. May be replaced by a UWSM.
24. Key Generator TSEC/KG-36 will be replaced by a universal security module.
25. Audio Digital Converter CV-3333/U.

NOTE: * Figure 5-34 depicts a MAF headquarters node in the year 2000 and beyond configured with universal work station modules.

Figure 5-33. Marine Amphibious Force Headquarters Node 1997-2001 (con't)

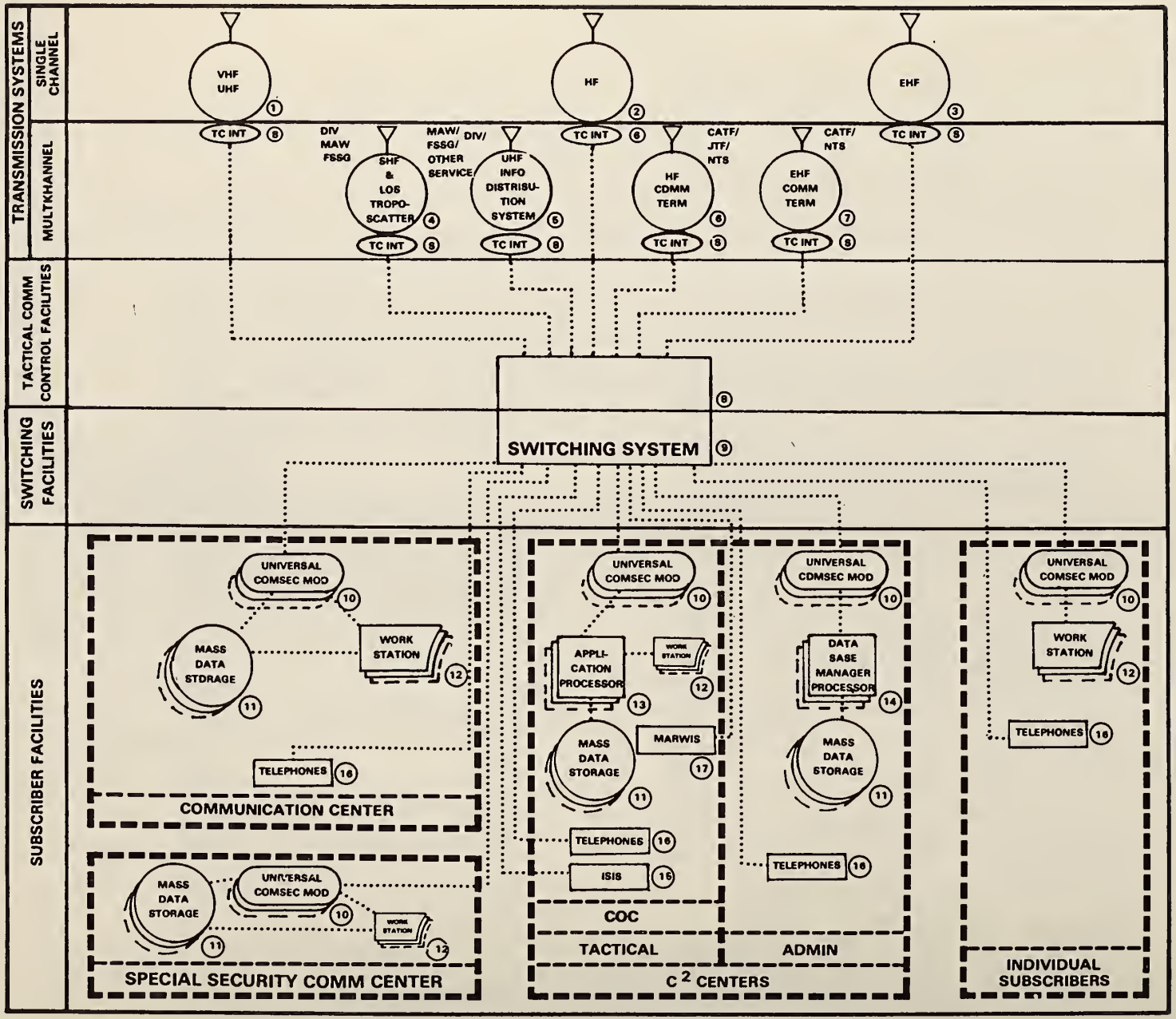

Figure 5-34. Marine Amphibious Force Headquarters Node, Year 2001

Systems/Equipment Projected to be in use in Year 2001

Single Channel Radios

1. HF: Radios AN/MRC-138, AN/PRC-104, and AN/GRC-193 will be replaced by the AN/PRC-( ), an improved, lighter weight HF radio capable of supporting digital voice and data communications.
2. VHF/UHF: VHF radios AN/GRC-SINCGARS and UHF Radios AN/MRC-138(UHF), AN/GRC-171A(V)2, AN/VRC-83 and AN/VRC-7 will be replaced by an integrated VHF/UHF radio, the AN/VRC-( ). Line-of-sight limitations of the VHF/UHF radio will be minimized by use of airborne relay; e.g., a retransmission module mounted in a remotely piloted vehicle (PRV).
3. EHF: Single Channel Objective Tactical Terminal (SCOTT).

Multichannel Radios

4. SHF: Troposcatter Radio Set AN/TRC-170(V)3(Improved).
5. UHF: JTIDS terminal or system with similar capabilities.
6. HF: High Frequency Communication Terminal (HFCT) AN/TSC-120.
7. EHF: EHF multichannel satellite system terminal.

Other Systems/Equipment

8. Main Distribution Frame and Technical Control. A technical control module and interface module (TC INT) will provide telemetry regulating circuit quality and equipment performance and will be capable of selectively controlling a radio.
9. The AN/TTC-42 and SB-3865 ULCSs and AN/GYC-7 ULMS will be replaced by a system that will significantly improve the capability to provide simultaneous voice, data, and video service and that will also provide an integrated technical control facility; e.g., an integrated services digital network (ISDN) switch and controller. Individual single channel and multichannel radios will be provided with a technical control and interface module, which will provide telemetry regulating circuit quality and equipment performance, capable of selectively controlling the radio.
10. Universal Security Module. A universal security module will replace the TSEC/KY-57 VINSON Security Equipment, the TSEC/KG-84C DLED, and the TSEC/KY-36 Key Generator.

11, 12,13, 14. MIFASS, TCO and TAOM functions may be performed by an integrated family of devices known as modular universal work stations (UWSMs). MAGIS IAC functions will be performed by an improved IAC. Some IAC functions may be performed on UWSMs. The work stations will vary in size depending on the functions to be performed with similar requirements met with common equipment modules. The key element is the maximum use of common modular components to reduce the number of different items of equipment with resulting logistics and life-cycle cost savings. The AN/TSC-96(V)(OL-188), AN/UXC-7, AN/MSC-63A, AN/MSC-63B, and End Use Computing Equipment (EUCE) will also be replaced by UWSMs.

15. ISIS. Some ISIS functions may be performed by UWSMs.
16. Telephones. The Digital Nonsecure Voice Terminal (DNVT) TA-954, and the Digital Subscriber Voice Terminal (DSVT) TSEC/KY-68 will remain in service during this period. Individual subscribers may also use UWSMs.
17. Marine Corps WWMCCS Information System (MARWIS) Terminal.

Figure 5-34. Marine Amphibious Force Headquarters Node, Year 2001 (con't)

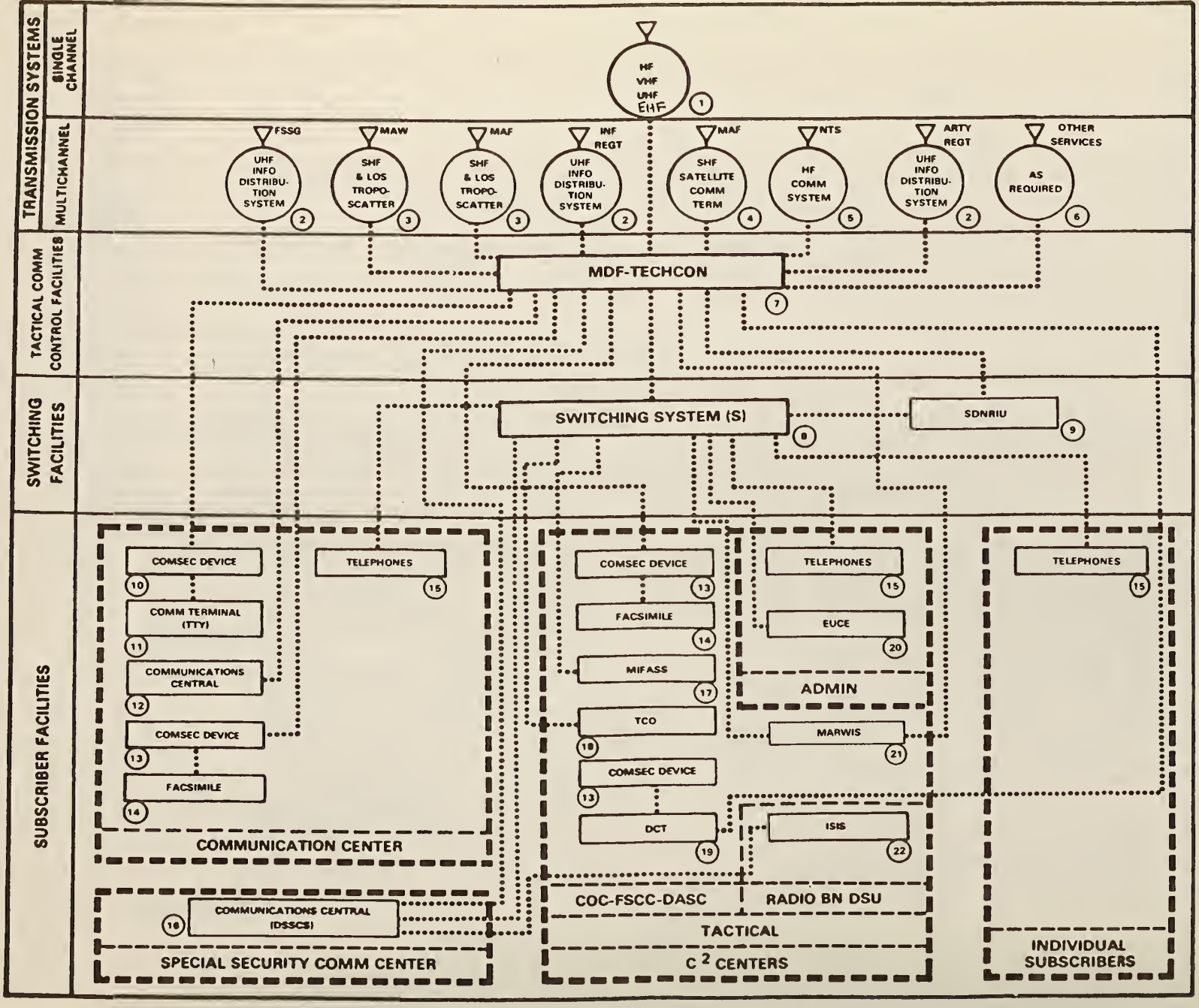

Figure 5-35. Marine Division Headquarters Node, 1997-2001

Systems/Equipment in Use and Projected Replacements, 1997-2001

Single Channel Radios

1. HF: Radios AN/MRC-138, AN/GRC-193, and AN/PRC-104 in use at the start of this period will be replaced by an improved HF radio capable of supporting digital voice and data communications.

VHF/ UHF: VHF Radios AN/GRC-SINCGARS and AN/PRC-68 and UHF Radios AN/MRC-138 (UHF), AN/PRC-113, and AN/PSC-3 will be replaced by an integrated VHF/UHF radio.

EHF: Single Channel Objective Tactical Terminal (SCOTT).

Multichannel Radios

2. VHF: Radio Set AN/MRC-139 may be replaced by a JTIDS terminal or system with similar capabilities.
3. SHF: Troposcatter Radio Set AN/TRC-170(V)3(Improved).
4. EHF: Ground Mobile Forces Satellite Communications Terminal AN/TSC-93A will be replaced by an EHF multichannel satellite system terminal.
5. HF: High Frequency Communication Terminal (HFCT) AN/TSC-120.
6. Systems as required to communicate with other Services/allies.

Other Systems/Equipment

7,8,9. Main Distribution Frame, Technical Control Facilities and Switching Systems. The AN/TTC-42 ULCS and the AN/GYC-7 ULMS will be replaced by a system that will significantly improve the capability to provide simultaneous voice, data, and video service and that will also prove an

Other Systems/Equipment (Cont'd)

integrated technical control facility; e.g., an integrated services digital network (ISDN) switch and controller. Individual single channel and multichannel radios will be provided with a technical control and interface module, which will provide telemetry regulating circuit quality and equipment performance, capable of selectively controlling the radio.

10, 13. TSEC/KG-84C DLED and TSEC/KY-57 VINSON Security equipment will be replaced by a universal communications security module.

11, 12,14, 16. Communication center systems/equipment including the AN/UGC-74A(V)3, the AN/MSC-63A, and the AN/UXC-7, will be replaced with universal work station modules (UWSMs) by the end of this period.

15. Telephones. The Digital Nonsecure Voice Terminal (DNVT) TA-954 and the Digital Subscriber Voice Terminal TSEC/KY-68 will continue to be used during this period. Individual subscribers may also use UWSMs.

17, 18,20. MIFASS, AN/UYQ-38(V), TCO, and EUCE may be replaced by UWSMs by the end of this period.

19. Digital Communications Terminal AN/PSC-2. The DCT will continue in use during this period.
21. Marine Corps WWMCCS Information System (MARWIS) Terminal.
22. ISIS. Some functions may be performed by UWSMs.

Figure 5-35. Marine Division Headquarters Node, 1997-2001 (con't)

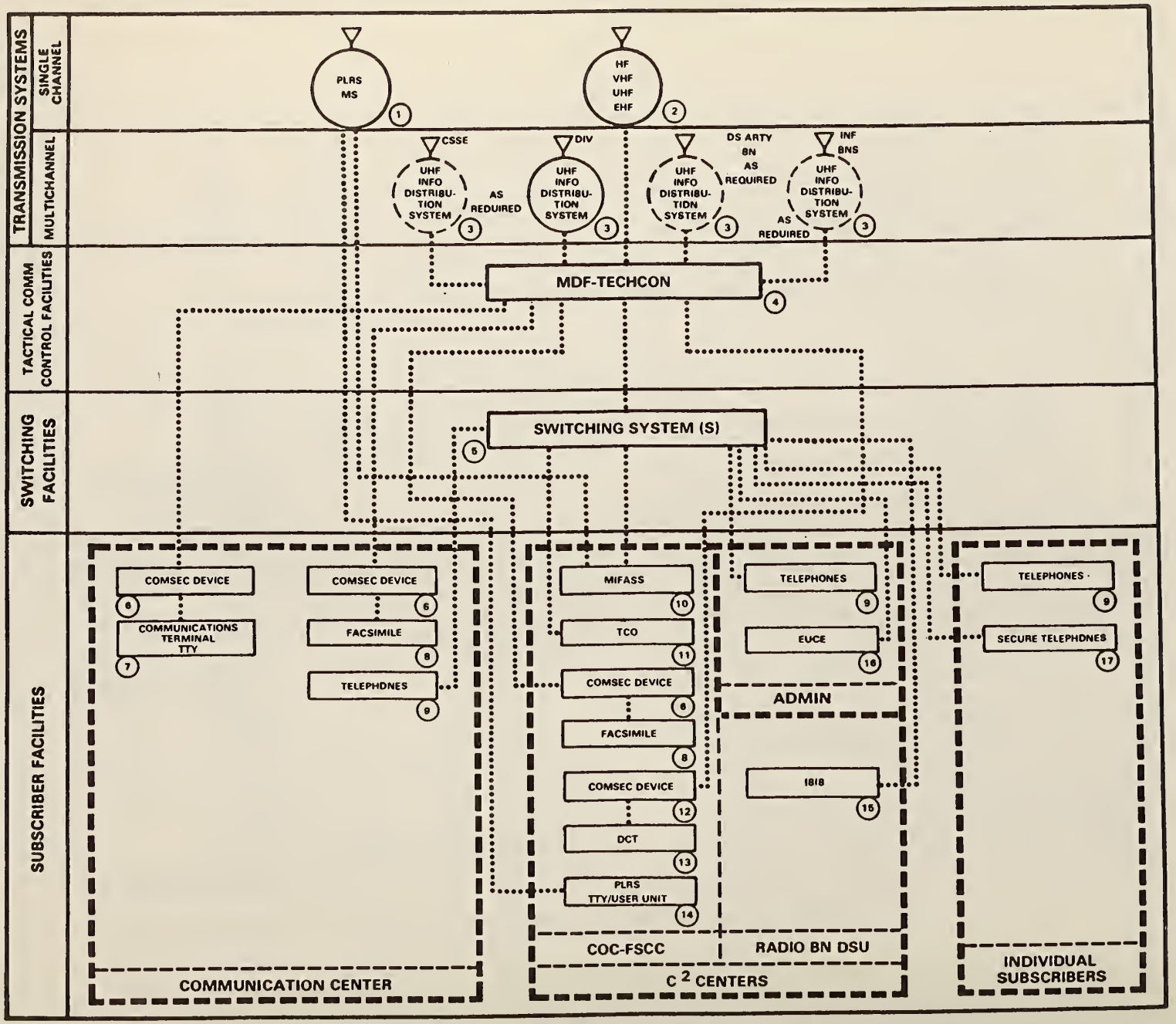

Figure 5-36. Infantry Regiment Headquarters Node, 1997-2001

Systems/Equipment in Use and Projected Replacements, 1997-2001

Single Channel Radios

1. UHF: Master Station, Position Location Reporting System (PLRS) AN/TSQ-129.
2. HF: Radios AN/MRC-138 and AN/PRC-104 in use at the start of this period will be replaced by an improved HF radio capable of supporting digital voice and data communications.

   VHF/UHF: VHF Radios AN/GRC-SINCGARS, and AN/PRC-68 and UHF Radio AN/MRC-138(UHF) will be replaced by an integrated VHF/UHF radio.

   EHF: Single Channel Objective Tactical Terminal (SCOTT).

Multichannel Radios

3. VHF: Radio AN/MRC-139 may be replaced during this period with a JTIDS terminal or system with similar capabilities.

Other Systems/Equipment

4,5. Main Distribution Frame, Technical Control and Switching Facilities. The SB-3865 ULCS and the AN/GYC-7 ULMS will be replaced by a system that will significantly improve the capability to provide simultaneous voice, data, and video service and that will also provide an integrated technical control facility; e.g., an integrated services digital network (ISDN) switch and controller. Individual single channel and multichannel radios will be provided with a

Other Systems/Equipment (Cont'd)

technical control and interface module, which will provide telemetry regulating circuit quality and equipment performance, capable of selectively controlling the radio.

6, 12. The TSEC/KG-84C and the TSEC/KY-57 VINSON will be replaced with a universal communications security module.

7, 8. The AN/UGC-74A(V)3 and the AN/UXC-7 Facsimile will be replaced by universal work station modules (UWSMs).

9, 18. The Digital Nonsecure Voice Terminal (DNVT) TA-954 and the Digital Subscriber Voice Terminal (DSVT) TSEC/KY-68 will remain in use during this period. Individual subscribers may also use UWSMs.

10, 11. MIFASS AN/UYG-38(V), and TCO may be replaced by UWSMs by the end of this period.

13. Digital Communications Terminal (DCT) AN/PSC-2 will continue to be used through this period.

14. Radio Set, Manpack, PLRS AN/PSQ-4//Radio Set, Vehicle, PLRS AN/VSQ-1//Communications Terminal AN/UGC-74A-(V)3 will remain in use during this period.

15. ISIS. Some ISIS functions will require continued use of existing ISIS equipment; other functions may be performed on UWSMs.

16. EUCE functions may be performed using UWSMs.

Figure 5-36. Infantry Regiment Headquarters Node, 1997-2001 (con't)

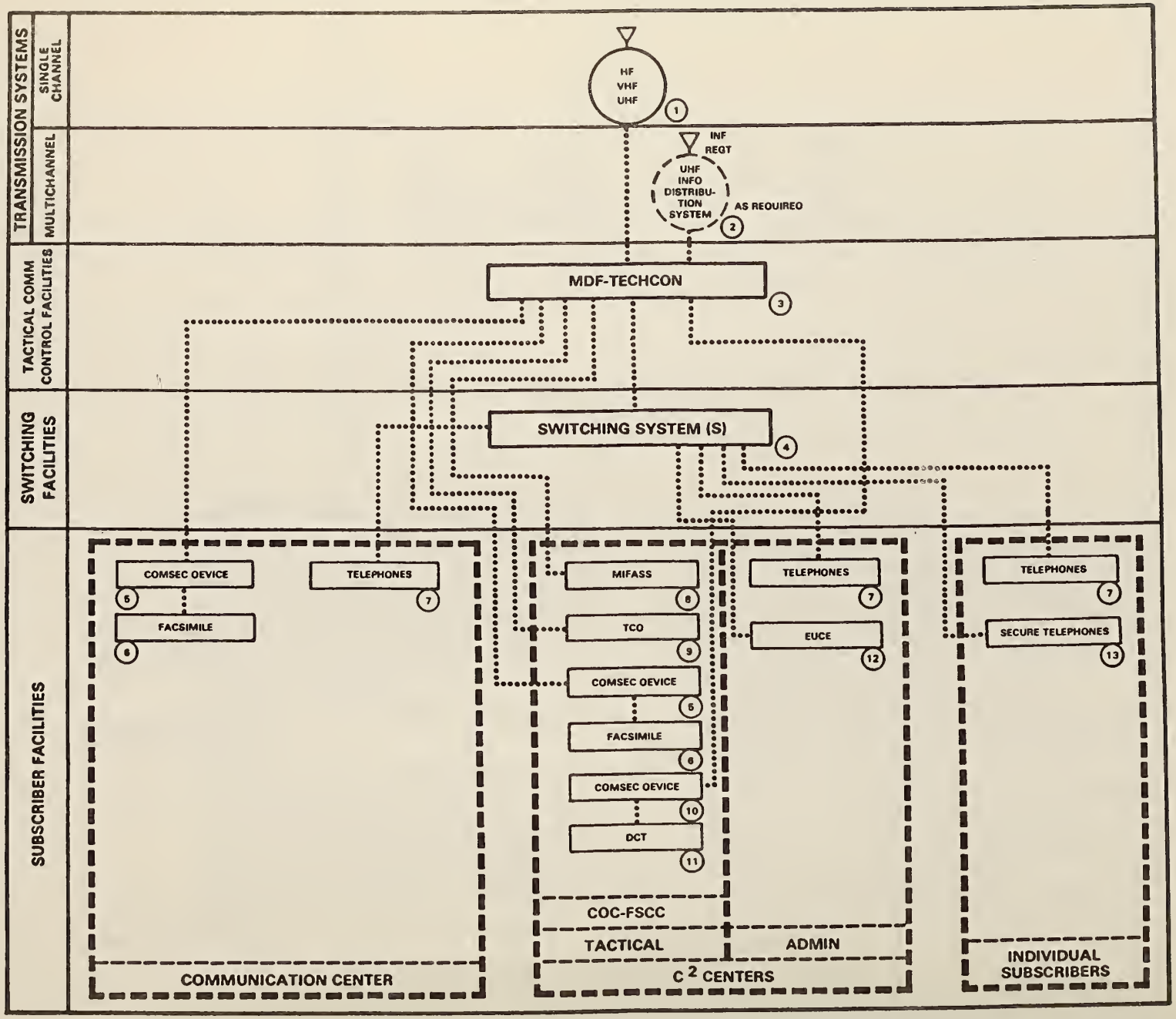

Figure 5-37. Infantry/Light Armored Vehicle Battalion Headquarters Node, 1997-2001

Systems/Equipment in Use and Projected Replacements, 1997-2001

Single Channel Radios

1. HF: Radios AN/MRC-138 and AN/PRC-104 in use at the start of this period will be replaced by an improved HF radio capable of supporting digital voice and data communications.

VHF/UHF: VHF Radios AN/GRC-SINCGARS, and AN/PRC-68 and UHF Radio AN/MRC-138(UHF) and AN/PRC-113 will be replaced by an integrated VHF/UHF radio.

Multichannel Radios

2. UHF: Radio Terminal Set, AN/MRC-139 may be replaced by a JTIDS terminal or system with similar capabilities.

Other Systems/Equipment

3. Main Distribution Frame-Technical Control. Individual single channel and multichannel radios will be provided with a technical control and interface module, which will provide telemetry regulating circuit quality and equipment performance, capable of selectively controlling the radio.

Other Systems/Equipment (Cont'd)

4. Switching System. A system, to be determined, that will provide secure digital voice and data service will be provided.

5, 10. TSEC/KG-84C DLED and TSEC/KY-57 VINSON will be replaced with a universal communications security module.

6,8, 9,12. The AN/UXC Facsimile, AN/UYQ-38(V) MIFASS, TCO, and and EUCE may be replaced by universal work station modules (UWSMs).

7, 13. The Digital Nonsecure Voice Terminal (DNVT) TA-954 and the Digital Subscriber Voice Terminal (DSVT) TSEC/KY68 will remain in use through this period. Individual subscribers may also use UWSMs.

11. Digital Communications Terminal (DCT) AN/PSC-2 will remain in use through this period.

Figure 5-37. Infantry/Light Armored Vehicle Battalion Headquarters Node, 1997-2001 (con't)

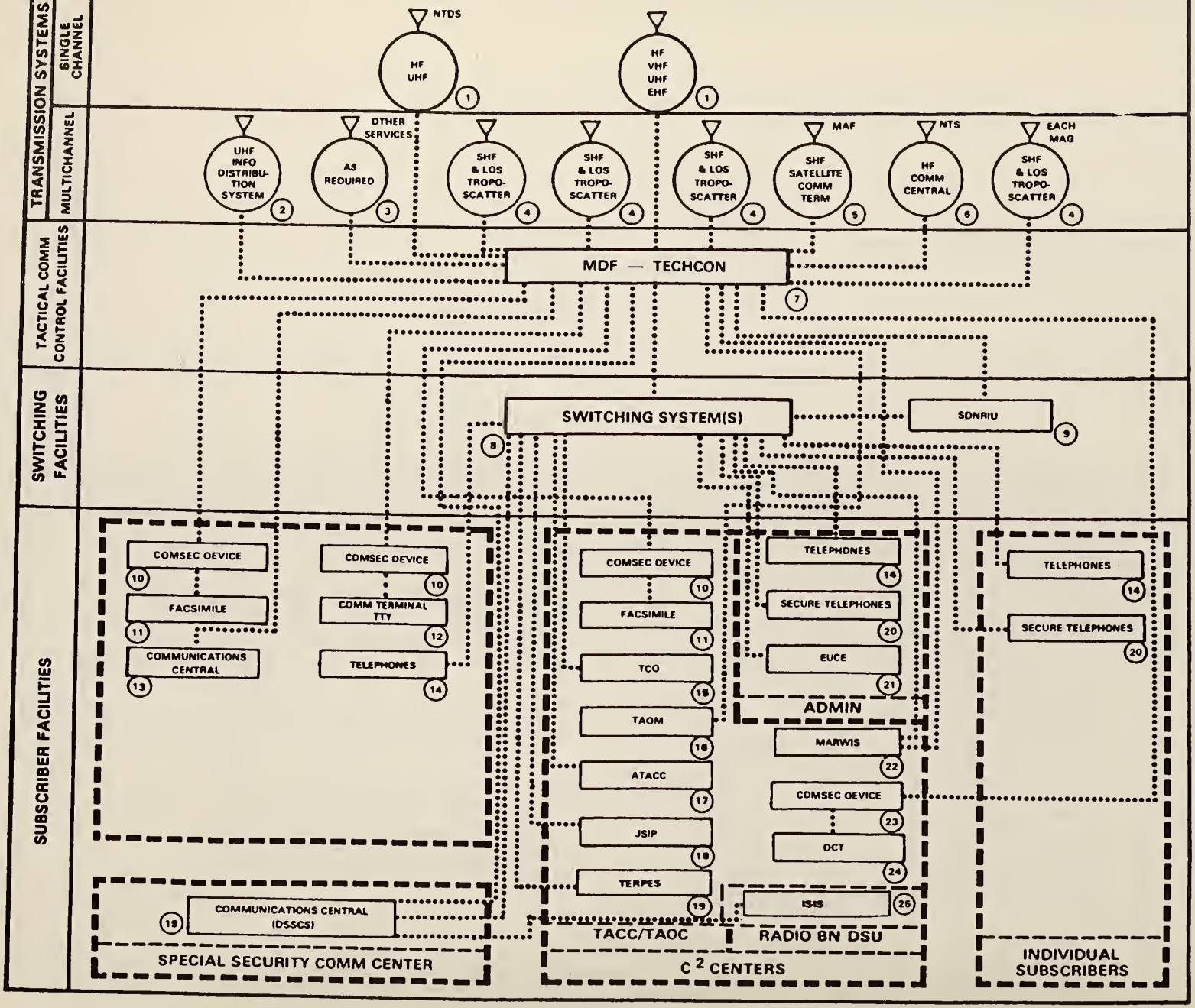

Figure 5-38. Marine Aircraft Wing Headquarters Node, 1997-2001

Systems/Equipment in Use and Projected Replacements, 1997-2001

Single Channel Radios

1. HF: Radios AN/MRC-138 and AN/PRC-104 in use at the start of this period will be replaced by an improved HF radio capable of supporting digital voice and data communications.

   VHF/UHF: VHF Radios AN/GRC-SINCGARS and AN/PRC-68 and UHF Radios AN/MRC-138(UHF) and AN/PRC-113 will be replaced by an integrated VHF/UHF radio.

   EHF: Single Channel Objective Tactical Terminal (SCOTT).

Multichannel Radios

2. UHF: Radio Terminal Set, AN/MRC-139 may be replaced by a JTIDS terminal or system with similar capabilities. JTIDS modules with a Class 2H Terminal will support the TACC and the TAOC.
3. As required for communications with other Services and allies. JTIDS terminals may at least partially meet this requirement.
4. SHF: Troposcatter Radio Set AN/TRC-170(V)3.
5. EHF: Satellite Communications Terminal AN/TSC-93A will be replaced by an EHF multichannel satellite system terminal.
6. HF: High Frequency Communication Terminal (HFCT). AN/TSC-120.

Other Systems/Equipment

7,8, 9. Main Distribution Frame, Technical Control and Switching Facilities. The AN/TTC-42 ULCS, the AN/GYC-7 ULMS, and other technical control and switching systems in use at the start of this period will be replaced by a system that significantly improves the capability to provide simultaneous voice, data, and video service and that will also provide an integrated technical control facility; e.g., an integrated services digital network (ISDN) switch and controller. Individual single channel and multichannel radios will be provided with a technical control and interface module, which will provide telmetry regulating circuit quality and equipment performance, capable of selectively controlling the radio.

10, 23. The TSEC/KG-84C DLED and the TSEC/KY-57 VINSON will be replaced by a universal communications security module.

11, 12,13. Communication center systems/equipment including the AN/UXC-7 facsimile, the AN/UGC-74A(V)3 TTY, and the AN/MSC-63A communications central may be replaced by universal work station modules (UWSMs).

14, 20. Telephones. The Digital Nonsecure Voice Terminal (DNVT) TA-954 and the Digital Subscriber Voice Terminal (DSVT) TSEC/KY-68 will remain in use through this period. Individual subscribers may also use UWSMs.

15,16, 17,21. TCO, AN/TYQ-23 TAOM, ATACC, and EUCE may be replaced by UWSMs.

18, 19,25. JSIP, TERPES and ISIS will continue in use; however, some functions may be performed by UWSMs.

22. Marine Corps WWMCCS Information System (MARWIS) Terminal.

24. The Digital Communications Terminal (DCT) AN/PSC-2 will remain in use during the period.

Figure 5-38. Marine Aircraft Wing Headquarters Node, 1997-2001 (con't)

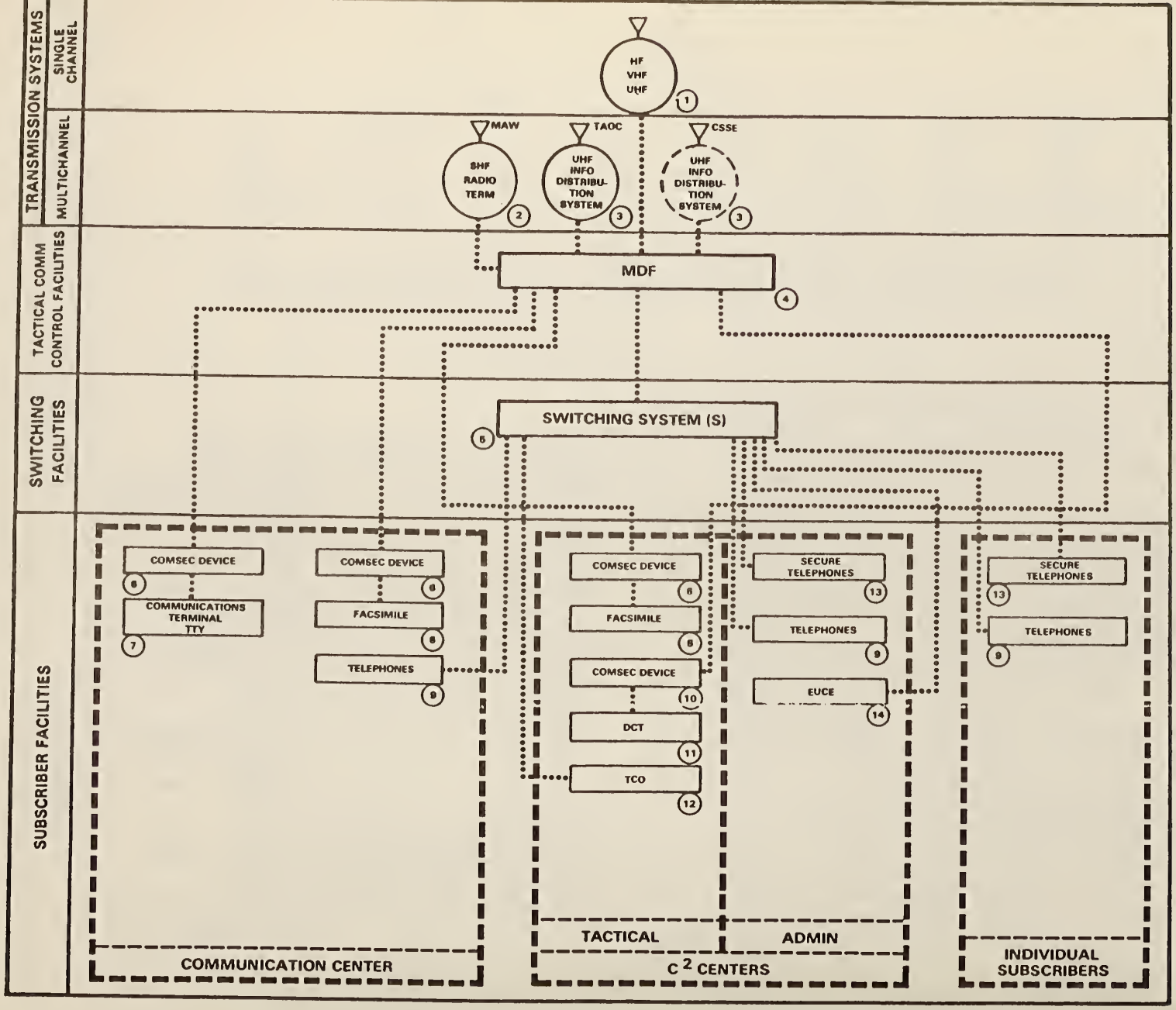

Figure 5-39. Marine Aircraft Group Headquarters Node, 1997-2001

Systems/Equipment in Use and Projected Replacements, 1997-2001

Single Channel Radios

1. HF: Radios AN/MRC-138, AN/PRC-104 and AN/GRC-193 will be replaced by an improved HF radio capable of supporting digital voice and data communication.

VHF/UHF: VHF radios AN/GRC-SINCGARS and UHF Radios AN/MRC-138 (UHF), AN/PRC-113 and AN/GRC-171A(V)2 will be replaced by an integrated VHF/UHF radio.

Multichannel Radios

2. SHF: Troposcatter Radio Set AN/TRC-170(V)3.
3. UHF: Radio Terminal Set, AN/MRC-139 may be replaced by a JTIDS terminal or a system with similar capabilities.

Other Systems/Equipment

4,5. Main Distribution Frame, Technical Control and Switching systems. The SB-3865 and other systems/equipment in this category will be replaced by a system that will significantly improve the capability to provide simultaneous voice, data, and video service and that will also provide an integrated technical control facility; e.g., an integrated services digital network (ISDN) switch and controller. Individual single channel and multichannel radios will be provided with a technical control and interface module, which will provide telemetry regulating circuit quality and equipment performance, capable of selectively controlling the radio.

Other Systems/Equipment (Cont'd)

6, 10. The TSEC/KY-84C DLED and the TSEC/KY-57 VINSON will be replaced by a universal communications security module.

7, 8. Communication center equipment including the AN/UXC-7 Facsimile and the AN/UGC-74A(V)3 TTY will be replaced by universal work station modules (UWSMs).

9, 13. The Digital Nonsecure Voice Terminal (DNVT) TA-954 and the Digital Subscriber Voice Terminal (DSVT) TSEC/KY-68 will remain in use through this period. Individual subscribers may also use UWSMs.

11. The Digital Communications Terminal (DCT) AN/PSC-2 will remain in use through this period.

12, 14. The TCO and EUCE may be replaced by UWSMs.

Figure 5-39. Marine Aircraft Group Headquarters Node, 1997-2001 (con't)

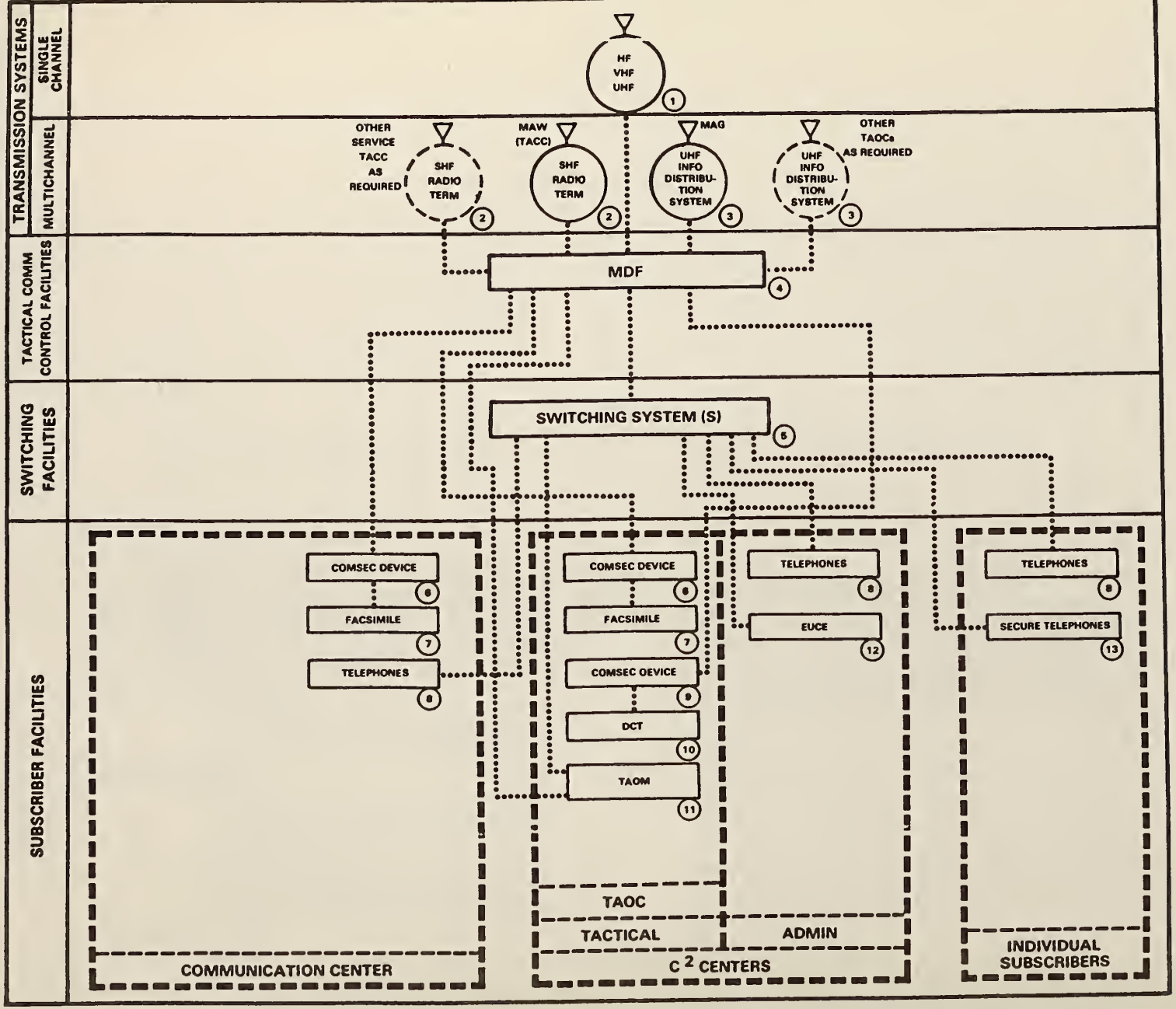

Figure 5-40. Marine Air Control Squadron Node, 1997-2001

Systems/Equipment in Use and Projected Replacements, 1997-2001

Single Channel Radios

1. HF: Radios AN/MRC-138, AN/PRC-104, AN/GRC-193, and AN/URC-97(V)2 will be replaced by an improved HF radio capable of supporting digital voice and data communications.

VHF/UHF: VHF radios AN/GRC-SINCGARS, RT-524/VRC and R-422/VRC, and UHF radios AN/PRC-113, AN/GRC-171A(V)2, and RT1272A/GRC-171(V) will be replaced by an integrated VHF/UHF radios.

Multichannel Radios

2. SHF: Troposcatter Radio Set AN/TRC-170(V)3.
3. UHF: Radio Terminal Set, AN/MRC-139 may be replaced by a JTIDS terminal or a system with similar capabilities.

Other Systems/Equipment

4,5. Main Distribution Frame, Technical Control, and Switching Facilities. The SB-3865 ULCS and the AN/GYC-7 ULMS will be replaced by a system that will significantly improve the capability to provide simultaneous voice, data, and video service and that will also provide an integrated technical control facility; e.g., an integrated

Other Systems/Equipment (Cont'd)

services digital network (ISDN) switch and controller. Individual single channel and multichannel radios will be provided with a technical control and interface module, which will provide telemetry regulating circuit quality and equipment performance, capable of selectively controlling the radio.

6, 9. The TSEC/KG-84C DLED and the TSEC/KY-57 VINSON will be replaced with a universal communications security module.

7. The AN/UXC-7 facsimile will be replaced by a universal work station module (UWSM).

8, 13. The Digital Nonsecure Voice Terminal (DNVT) TA-954 and the Digital Subscriber Voice Terminal (DSVT) TSEC/KY-68 will remain in use through the period. Individual subscribsrs may also use UWSMs.

10. The Digital Communications Terminal (DCT) AN/PSC-2 will remain in use through the period.

11, 12. Functions of the AN/TYQ-23 TAOM and of the EUCE may be performed by UWSMs by the end of the period.

Figure 5-40. Marine Air Control Squadron Node, 1997-2001 (con't)

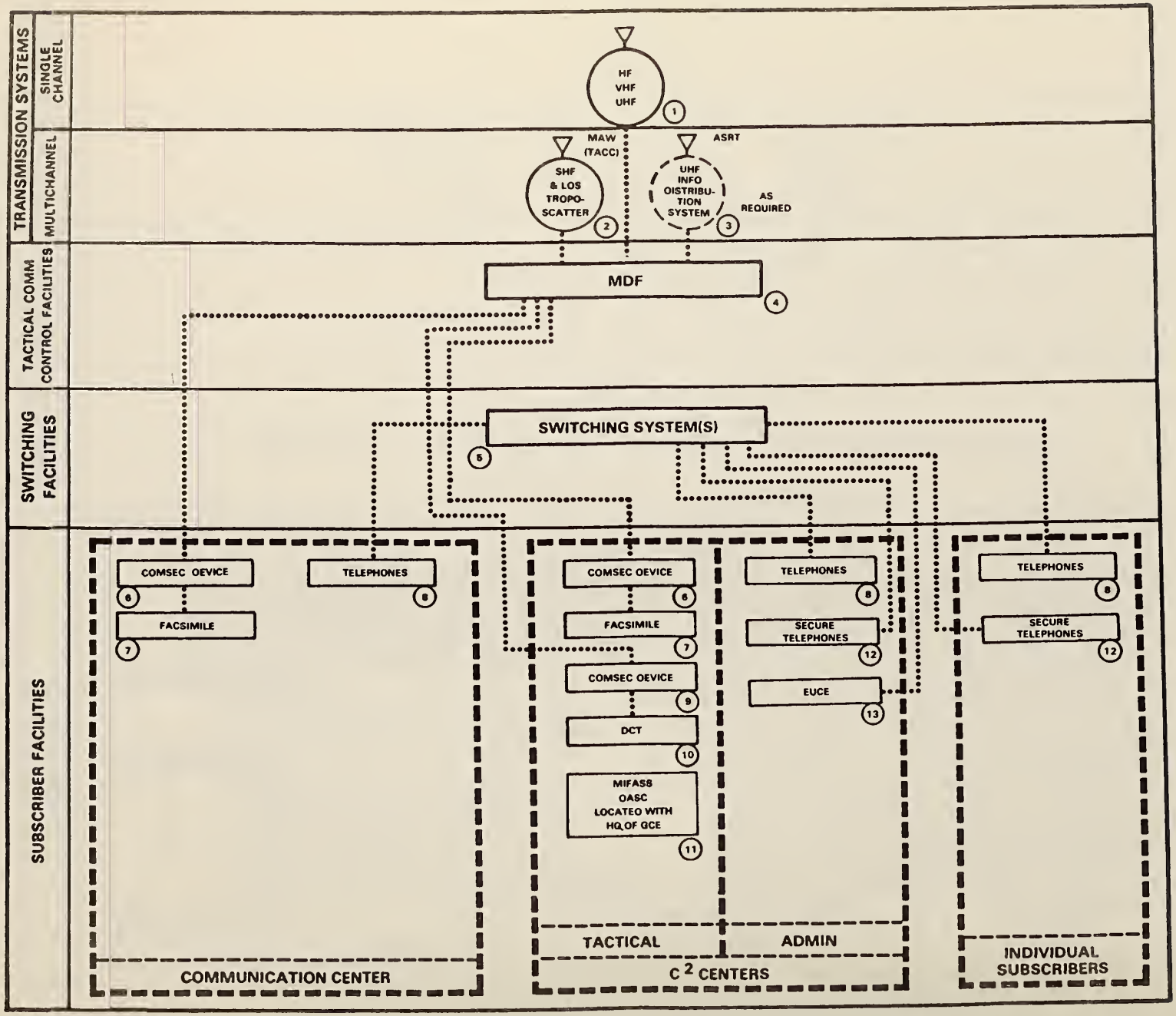

Figure 5-41. Marine Air Support Squadron Node, 1997-2001

Systems/Equipment in Use and Projected Replacements, 1997-2001

Single Channel Radios

1. HF: Radios AN/MRC-138, AN/PRC-104 and AN/GRC-193 in use at the start of this period will be replaced by an improved HF radio capable of supporting digital voice and data communications.

VHF/UHF: VHF radios AN/GRC-SINCGARS and UHF radios AN/PRC-113, AN/MRC-138(UHF), and AN/GRC-171A(V)2 will be replaced by an integrated VHF/UHF radio.

Multichannel Radios

2. SHF: Troposcatter Radio Set AN/TRC-170(V)3.
3. UHF: Radio Terminal Set, AN/MRC-139 may be replaced by a JTIDS terminal or a system with similar capabilities.

Other Systems/Equipment

4. Main Distribution Frame-Technical Control. Individual single channel and multichannel radios will be provided with a technical control and interface module, which will provide telemetry regulating circuit quality and equipment performance capable of selectively controlling the radio.

Other Systems/Equipment (Cont'd)

5. Switching System. A switching system, to be determined, that will provide secure digital voice and data service will be provided.
6, 9. The TSEC/KG-84C DLED and the TSEC/KY-57 VINSON will be replaced by a universal communications security module.
7. The AN/UXC-7 facsimile will be replaced by a universal work station module (UWSM).
8, 12. Telephones. The Digital Nonsecure Voice Terminal (DNVT) TA-954 and the Digital Subscriber Voice Terminal (DSVT) TSEC/KY-68 will remain in use through this period. Individual subscribers may use UWSMs.
10. Digital Communications Terminal (DCT) AN/PSC-2 will remain in service through the period.
11, 13. Functions of the AN/UYQ-38(V) Marine Integrated Fire and Air Support System (MIFASS) and the EUCE may be performed on UWSMs.

Figure 5-41. Marine Air Support Squadron Node, 1997-2001 (con't)

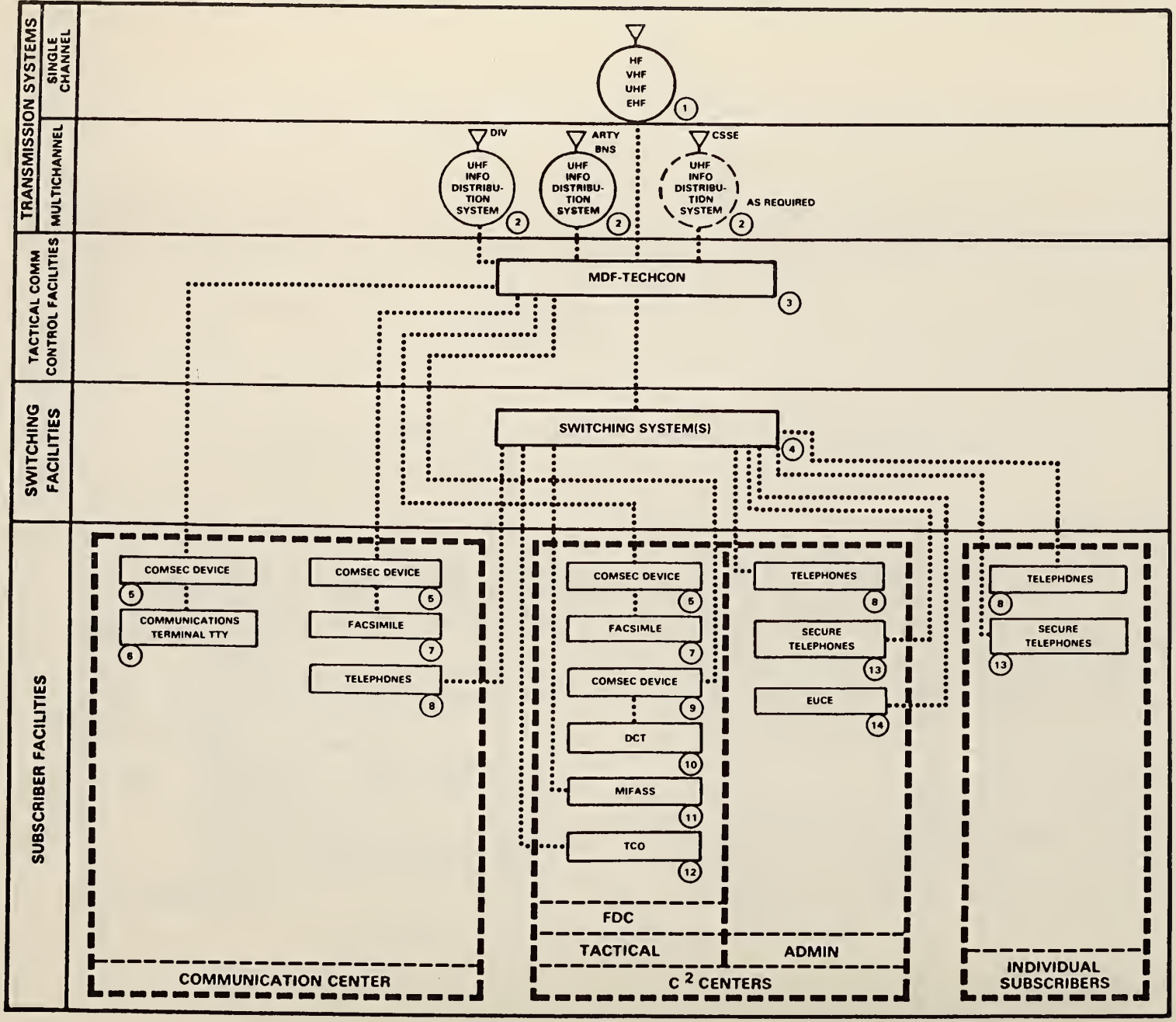

Figure 5-42. Artillery Regimental Headquarters Node, 1997-2001

Systems/Equipment in Use and Projected Replacements, 1997-2001

Single Channel Radios

1. HF: Radios AN/MRC-138 and AN/PRC-104 in use at the start of this period will be replaced by an improved HF radio capable of supporting digital voice and data communications.

VHF/UHF: VHF radios AN/PRC-68 and AN/GRC-SINCGARS and UHF radios AN/MRC-138 (UHF), AN/PRC-113, and AN/VRC-83 will be replaced by an integrated VHF/UHF radio.

EHF: Single Channel Objective Tactical Terminal (SCOTT).

Multichannel Radios

2. UHF: Radio Terminal Set, AN/MRC-139 may be replaced by a JTIDS terminal or a system with similar capabilities.

Other Systems/Equipment

3,4. Main Distribution Frame, Technical Control and Switching Facilities. The An/TTC-42 ULCS and the AN/GYC-7 ULMS will be replaced by a system that will significantly improve the capability to provide simultaneous voice, data, and video service and will also provide an integrated technical control facility; e.g., an integrated services digital network (ISDN) switch and controller.

Other Systems/Equipment (Cont'd)

Individual single channel and multichannel radios will be provided with a technical control and interface module, which will provide telemetry regulating circuit quality and equipment performance capable of selectively controlling the radio.

5, 9. The TSEC/KG-84C DLED and the TSEC/KY-57 VINSON will be replaced with a universal communications security module.

6, 7. The AN/UXC-7 facsimile and the AN/UGC-74A(V)3 TTY will be replaced by a universal work station module (UWSM).

8, 13. Telephones. The Digital Nonsecure Voice Terminal (DNVT) TA-954 and the Digital Subscriber Voice Terminal (DSVT) TSEC/KY-68 will remain in service through this period. Individual subscribers may use UWSMs.

10. The Digital Communications Terminal (DCT) AN/PSC-2 will remain in service through this period.

11, 12,14. AN/UYG-38(V) MIFASS, TCO, and EUCE functions may be performed on UWSMs.

NOTE: This figure does not include communications equipment required if the artillery regimental command post is to function as the alternate division command post.

Figure 5-42. Artillery Regimental Headquarters Node, 1997-2001 (con't)

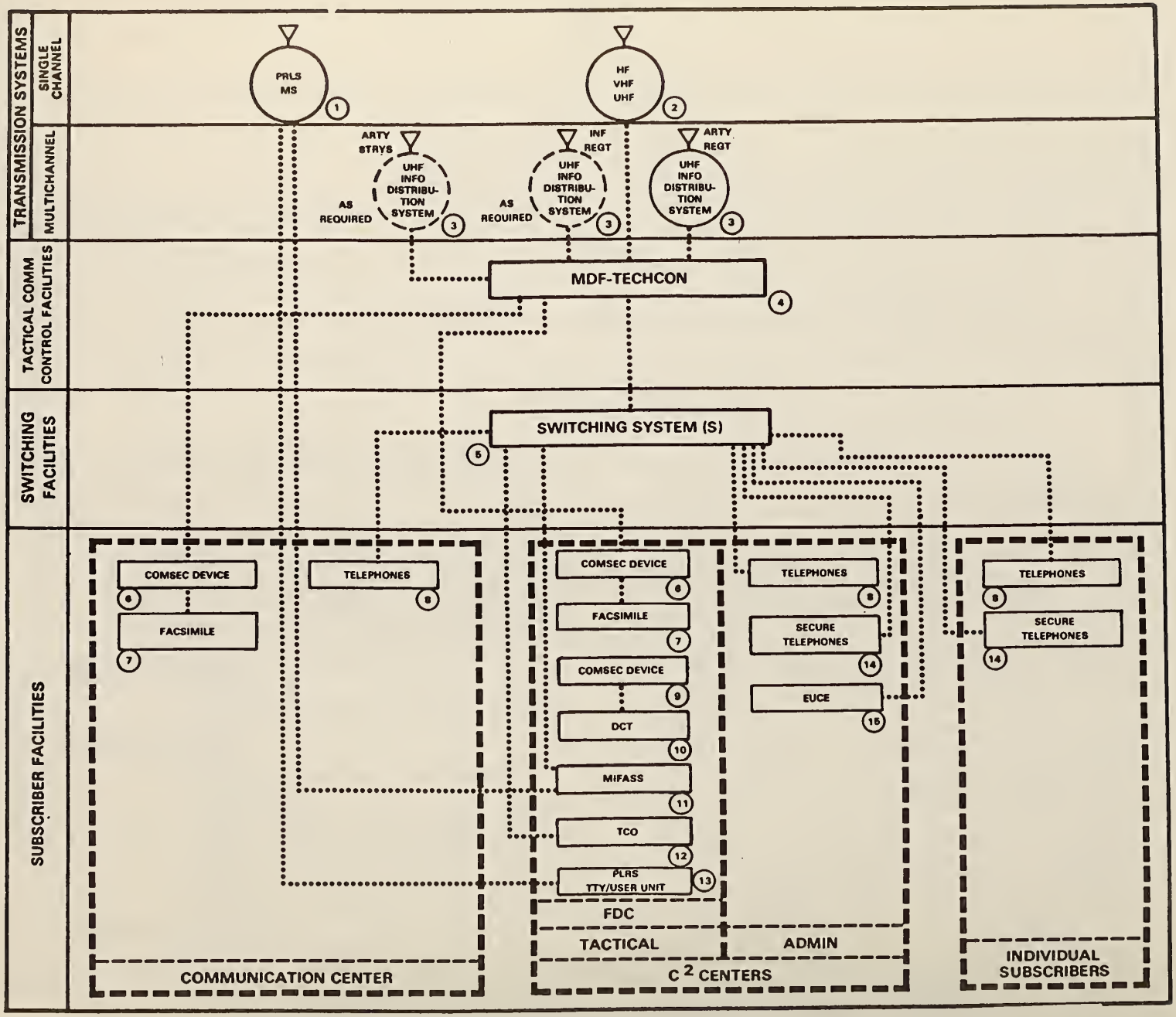

Figure 5-43. Artillery Battalion Headquarters Node, 1997-2001

Systems/Equipment in Use and Projected Replacements, 1997-2001

Single Channel Radios

1. UHF: Master Station, Position Location Reporting System (PLRS) AN/TSQ-129. (Direct support battalions only.)
2. HF: Radios AN/MRC-138 and AN/PRC-104 will be replaced by an improved HF radio capable of supporting digital voice and data communications.

VHF/UHF: VHF radios AN/PRC-68 and AN/GRC-SINCGARS and UHF radios AN/MRC-138(UHF) and AN/PRC113 will be replaced by an integrated VHF/UHF radio.

Multichannel Radios

3. UHF: Radio Terminal Set, AN/MRC-139 may be replaced by a JTIDS terminal or a system with similar capabilities.

Other Systems/Equipment

4,5, Main Distribution Frame, Technical Control, and Switching Facilities. The SB-3865 ULCS and the AN/GYC-7 ULMS will be replaced by a system that will significantly improve the capability to provide simultaneous voice, data, and video service and that will also provide an integrated technical control facility; e.g., an integrated services digital network (ISDN) switch and

Other Systems/Equipment (Cont'd)

controller. Individual single channel and multichannel radios will be provided with a technical control and interface module, which will provide telemetry regulating circuit quality and equipment performance, capable of selectively controlling the radio.

6, 9. The TSEC/KG-84C DLED and the TSEC/KY-57 VINSON will be replaced by a universal communications security module.

7. Communication Central Equipment such as the AN/UXC-7 facsimile will be replaced by universal work station modules (UWSMs).

8, 14. Telephones. The Digital Nonsecure Voice Terminal (DNVT) TA-954 and the Digital Subscriber Voice Terminal (DSVT) TSEC/KY-689 will remain in service during this period. Individual subscribers may use UWSMs.

10. The Digital Communications Terminal (DCT) AN/PSC-2 will remain in service during this period.

11, 12,15. Functions of the AN/UYQ-38(V) MIFASS, TCO, and EUCE may be performed on UWSMs.

13. Radio Set, Manpack, PLRS AN/PSQ-4//Radio Set, Vehicle, PLRS AN/VSQ-1//Communications Terminal AN/UGC-74A(V)3.

Figure 5-43. Artillery Battalion Headquarters Node, 1997-2001 (con't)

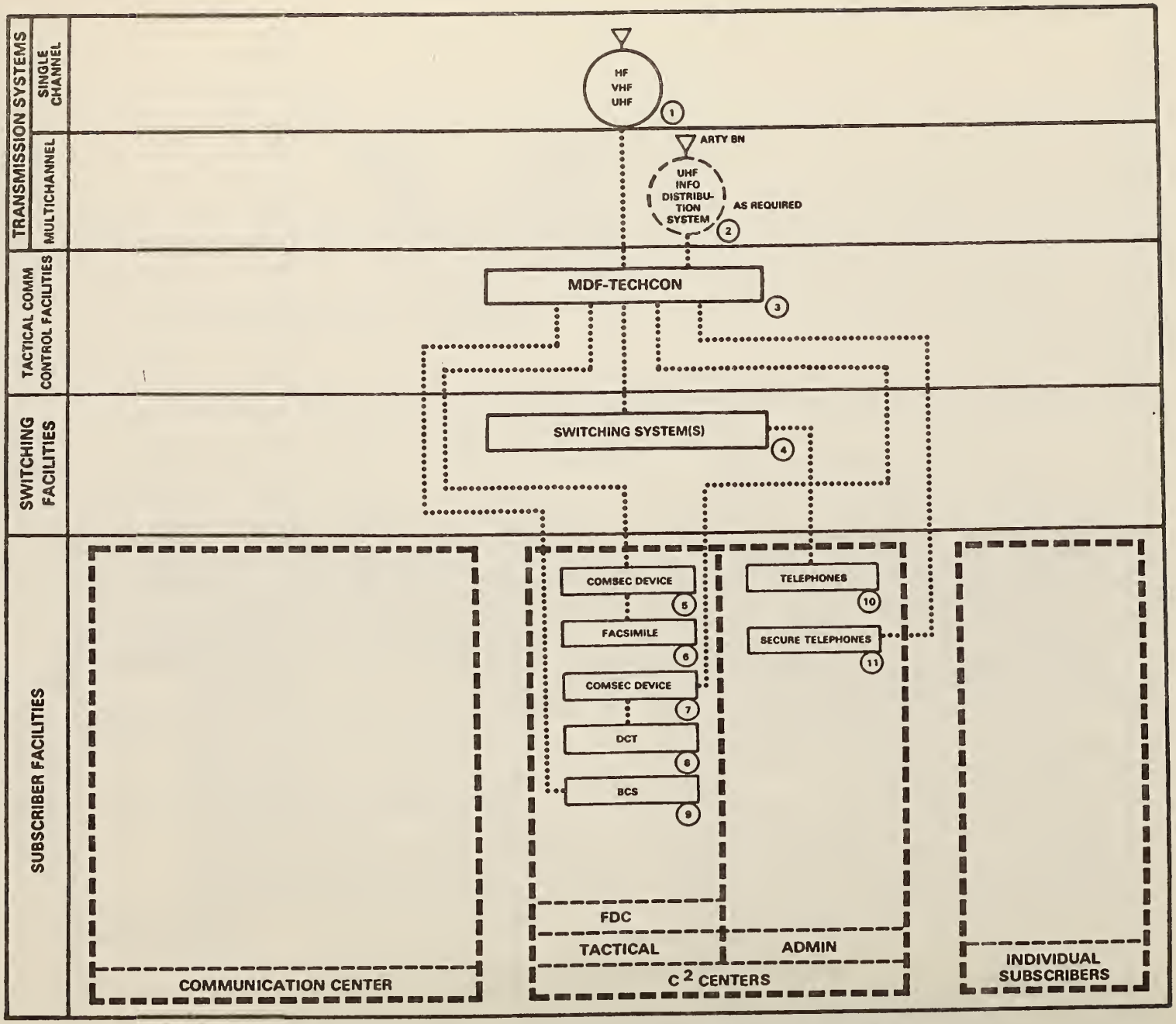

Figure 5-44. Artillery Battery Node, 1997-2001

Systems/Equipment in Use and Projected Replacements, 1997-2001

Single Channel Radios

1. HF: Radios AN/MRC-138 and AN/PRC-104 in use at the start of this period will be replaced with an improved HF radio capable of supporting digital voice and data communications.

VHF/UHF: VHF radios AN/PRC-68 and AN/GRC-SINCGARS and UHF radios AN/MRC-138(UHF) and AN/PRC-113 will be replaced by an integrated VHF/UHF radio.

Multichannel Radios

2. VHF: Radio Terminal Set, AN/MRC-139 may be replaced during this period by a JTIDS terminal or a system with similar capabilities.

Other Systems/Equipment

3. Main Distribution Frame-Technical Control. Individual single channel and multichannel radios will be provided with a technical control and interface module, which will provide telemetry regulating circuit quality and equipment performance capable of selectively controlling the radio.

Other Systems/Equipment (Cont'd)

4. Switching System. A switching system, to be determined, that will provide secure digital voice and data service will be provided.

5, 7. The TSEC/KG-84C DLED and the TSEC/KY-57 VINSON will be replaced with a universal communications security module.

6, 9. The Battery Computer System AN/GYK-29, the Backup Computer System, and the Tactical Facsimile AN/UXC-7 may be replaced by universal work station modules (UWSMs).

8. Digital Communications Terminal (DCT) AN/PSC-2 will remain in use through this period.

10, 11. Telephones. The Digital Nonsecure Voice Terminal TA-954 and the Digital Subscriber Voice Terminal TSEC/KY-68 will remain in service through this period.

Figure 5-44. Artillery Battery Node, 1997-2001 (con't)

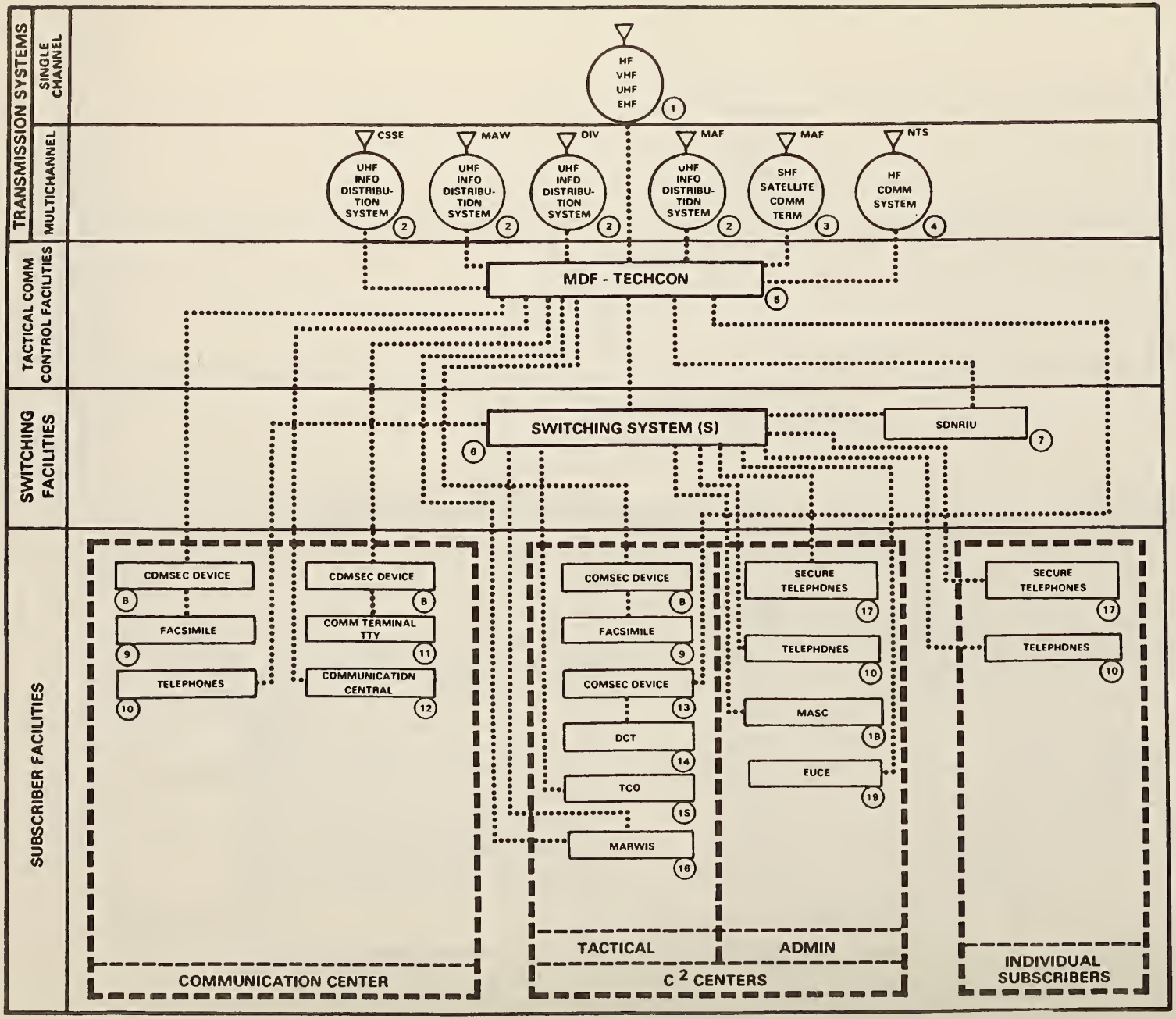

Figure 5-45. Force Service Support Group Headquarters Node, 1997-2001

Systems/Equipment in Use and Projected Replacements, 1997-2001

Single Channel Radios

1. HF: Radios AN/MRC-138 and AN/PRC-104 in use at the start of this period will be replaced with an improved HF radio capable of supporting digital voice and data communications.

VHF/UHF: VHF radios AN/PRC-68 and AN/GRC-SINCGARS and UHF radios AN/MRC-138(UHF) and AN/PRC-113 will be replaced by an integrated VHF/UHF radio.

EHF: Single Channel Objective Tactical Terminal (SCOTT).

Multichannel Radios

2,3. UHF: Radio Terminal Set, AN/MRC-139 and the Ground Mobile Forces Satellite Communications Terminal AN/TSC-93A may be replaced by a JTIDS terminal or a system with similar capabilities.

4. HF: High Frequency Communication Terminal (HFCT).

Other Systems/Equipment

5,6,7. Main Distribution Frame, Technical Control and Switching Facilities. The AN/TTC-42 ULCS, the AN/GYC-7 ULMS and other equipment in this category will be replaced by a system that will significantly improve the capability to provide simultaneous voice, data, and video service and that will also provide an integrated technical control facility; e.g., an integrated services digital network (ISDN) switch and controller.

Other Systems/Equipment (Cont'd)

Individual single channel and multichannel radios will be provided with a technical control and interface module, which will provide telemetry regulating circuit quality and equipment performance, capable of selectively controlling the radio.

8, 13. The TSEC/KG-84C DLED and the TSEC/KY-57 VINSON will be replaced by a universal communications security module.

9, 11,12 Communication center equipment including the AN/UXC-7 facsimile, the AN/UGC-74A(V)3 communications terminal, and the Communications Central AN/MSC-63A will be replaced by universal work station modules (UWSMs).

10, 17. Telephones. The Digital Nonsecure Voice Terminal TA-954 and the Digital Subscriber Voice Terminal TSEC/KY-68 will remain in use through the period. Individual subscribers may also use UWSMs.

14. Digital Communications Terminal (DCT) AN/PSC-2 will remain in use through the period.

15, 18,19. TCO, MASC and EUCE may be replaced by UWSMs during this period.

16. Marine Corps WWMCCS Information System (MARWIS)

Figure 5-45. Force Service Support Group Headquarters Node, 1997-2001 (con't)

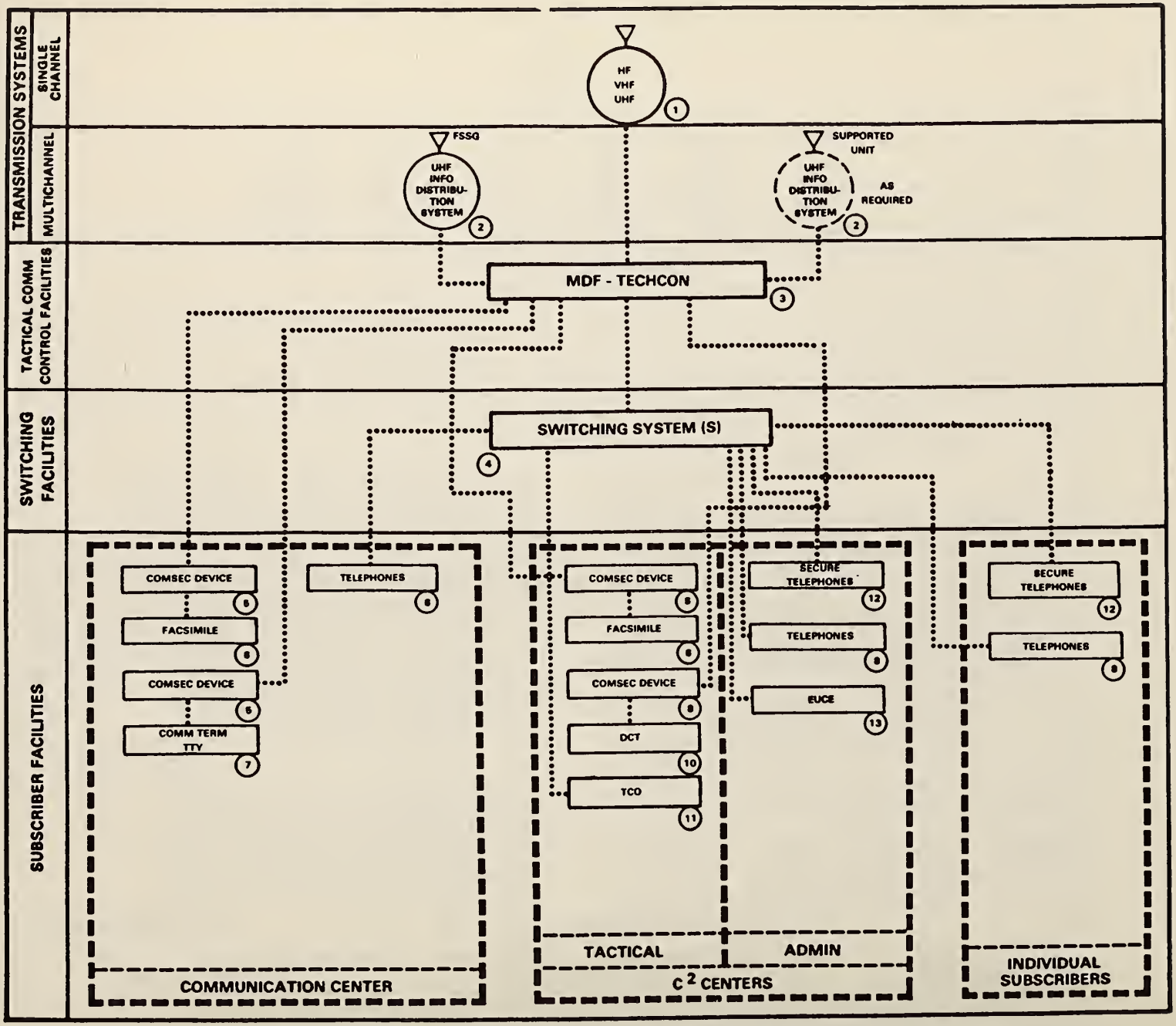

Figure 5-46. Combat Service Support Element Headquarters Node, 1997-2001

Systems/Equipment in Use and Projected Replacements, 1997-2001

Single Channel Radios

1. HF: Radios AN/MRC-138 and AN/PRC-104 in use at the start of this period will be replaced with an improved HF radio capable of supporting digital voice and data communications.

VHF/UHF: VHF radios AN/PRC-68 and AN/GRC-SINCGARS and UHF radios AN/MRC-138(UHF) and AN/PRC-113 will be replaced by an integrated VHF/UHF radio.

Multichannel Radios

2. VHF: Radio Terminal Set, AN/MRC-139 may be replaced by a JTIDS terminal or a system with similar capabilities.

Other Systems/Equipment

3,4, Main Distribution Frame-Technical Control. Technical Control and Switching Systems. The SB-3865 ULCS and other equipment in this category will be replaced by a system that will significantly improve the capability to provide simultaneous voice, data, and video service and that will also provide an integrated technical control facility; e.g., an integrated services digital network (ISDN) switch and controller.

Other Systems/Equipment (Cont'd)

Individual single channel and multichannel radios will be provided with a technical control and interface module, which will provide telemetry regulating circuit quality and equipment performance, capable of selectively controlling the radio.

5, 9. The TSEC/KG-84C DLED and the TSEC/KY-57 VINSON will be replaced with a universal communications security module.

6, 7. The AN/UXC-7 facsimile and the AN/UGC-74A(V)3 communications terminal in the communications center will be replaced by universal work station modules (UWSMs).

8, 12. Telephones. The Digital Nonsecure Voice Terminal TA-954 and the Digital Subscriber Voice Terminal TSEC/KY-68 will remain in service through this period. Individual subscribers may also use UWSMs.

10. Digital Communications Terminal (DCT) AN/PSC-2 will remain in use through this period.

11, 13. TCO and EUCE functions may be performed on UWSMs.

Figure 5-46. Combat Service Support Element Headquarters Node, 1997-2001 (con't)

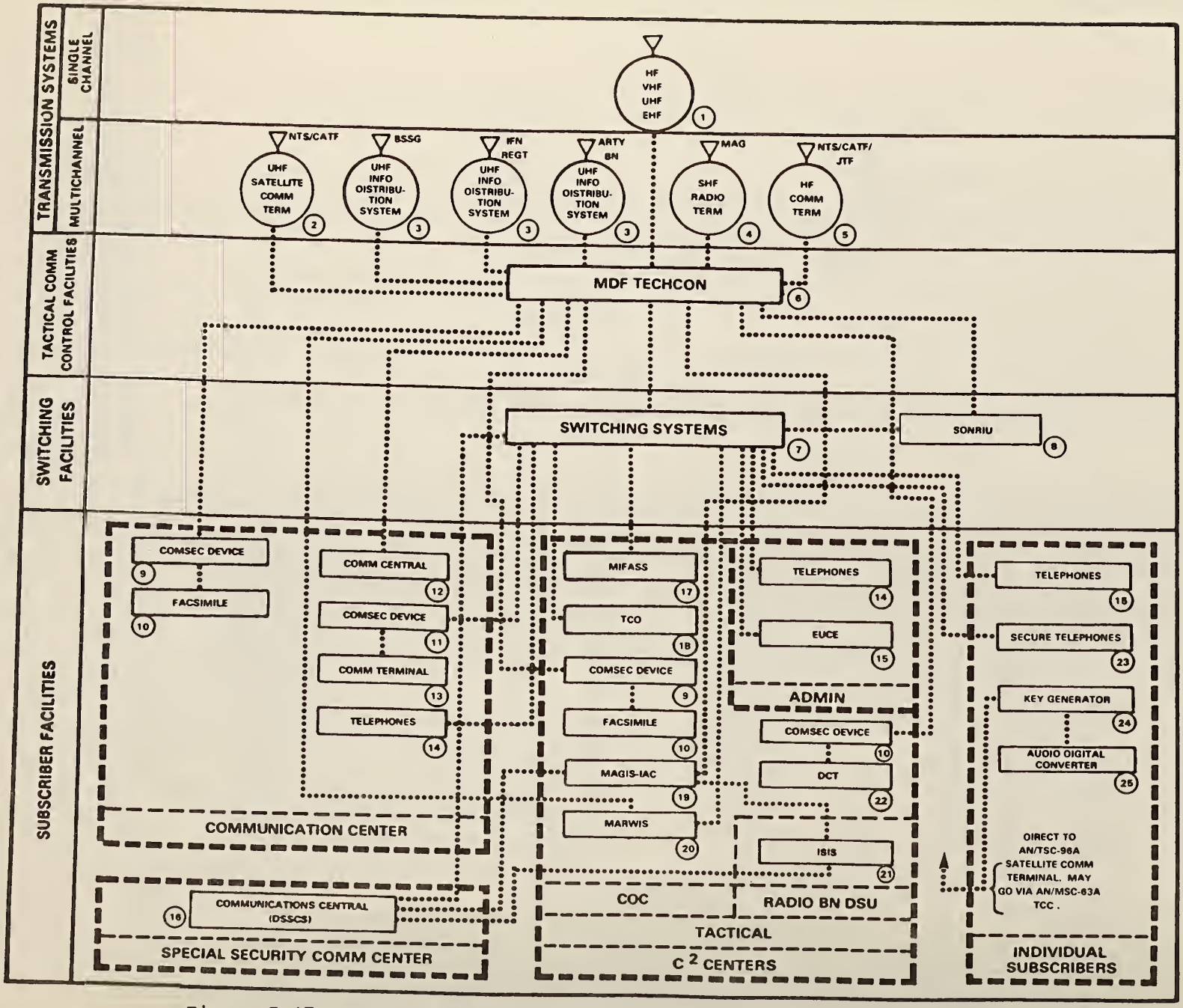

Figure 5-47. Marine Amphibious Brigade Headquarters Node, 1997-2001

Systems/Equipment in Use and Projected Replacements, 1997-2001

Single Channel Radios

1. HF: Radios AN/MRC-138, AN/PRC-104 and AN/GRC-193 in use at the start of this period will be replaced with an improved HF radio capable of supporting digital voice and data communications.

VHF/UHF: VHF radios AN/PRC-68 and AN/GRC-SINCGARS and UHF radios AN/MRC-138(UHF) and AN/PRC-113 will be replaced by an integrated VHF/UHF radio.

EHF: Single Channel Objective Tactical Terminal (SCOTT).

Multichannel Radios

2. EHF: Satellite Communications Central AN/TSC-96A to be replaced by an EHF multichannel satellite system terminal.

3. VHF: Radio Terminal Set, AN/MRC-139 may be replaced by a JTIDS terminal or a system with similar capabilities.

4. SHF: Troposcatter Radio Set AN/TRC-170(V)3.

5. HF: High Frequency Communication Terminal (HFCT) AN/TSC-120.

Other Systems/Equipment

6,7,8. Main Distribution Frame, Technical Control and Switching Facilities. The AN/TTC-42 ULCS and the AN/ GYC-7 ULMS will be replaced by a system that will significantly improve the capability to provide simultaneous voice, data, and video service and that will also provide an integrated technical control facility; e.g., an integrated services digital network (ISDN) switch and controller. Individual single channel and multichannel radios will be provided with a technical control and interface module, which will provide telemetry regulating circuit quality and equipment performance, capable of selectively controlling the radio.

Other Systems/Equipment (Cont'd)

10,12, 13,16. the AN/UXC-7 facsimile, the AN/MSC-63A Communications Central, and the AN/UGC-74A(V)3 Communications Terminal will be replaced with universal work station modules (UWSMs) during this time period.

9, 11,24. The TSEC/KY-84C DLED, the TSEC/KY-57 VINSON and the TSEC/KG-36 will be replaced by a universal communications security module.

14, 23. Telephones. The Digital Nonsecure Voice Terminal (DNVT) TA-954 and the Digital Subscriber Terminal (DSVT) TSEC/KY-68 will remain in service through this period. Individual subscribers may also use UWSMs.

15, 17,18, 19. The AN/UYQ-38(V) MIFASS, the TCO, and EUCE functions may be performed on UWSMs. MAGIS IAC functions will be performed by an improved IAC. Some IAC functions may be performed on UWSMs.

20. Marine Corps WWMCCS Information System Terminal

21. Some ISIS functions may be performed on UWSMs; other functions will continue to require ISIS peculiar equipment.

22. Digital Communications Terminal (DCT) AN/PSC-2 will remain in service through this period.

24, 25. The Advanced Narrowband Digital Voice Terminal (ANDVT) TACTERM and the CV-3333/U Audio Digital Converter may continue in use through this period.

Figure 5-47. Marine Amphibious Brigade Headquarters Node, 1997-2001 (con't)

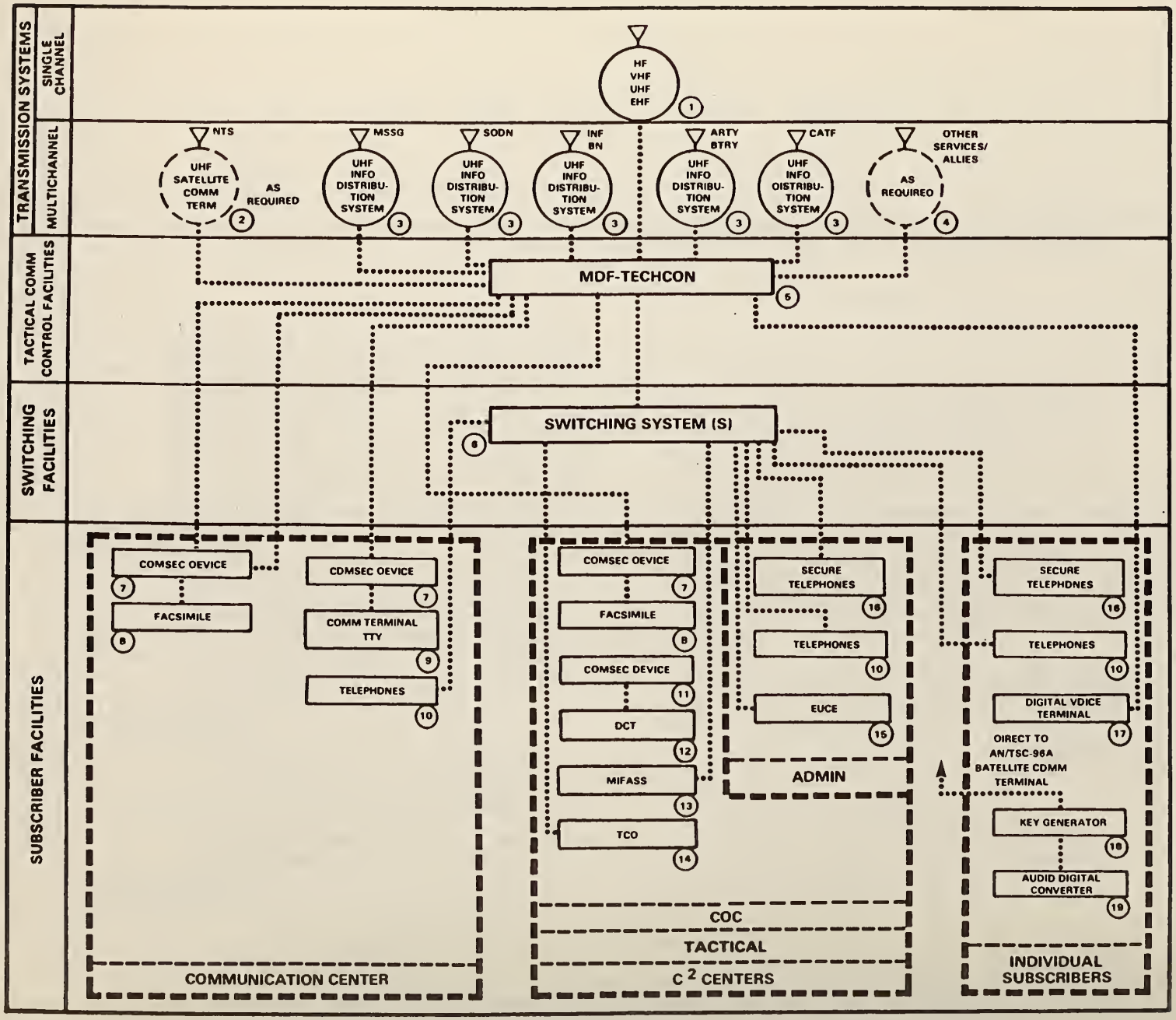

Figure 5-48. Marine Amphibious Unit Headquarters Node, 1997-2001

Systems/Equipment in Use and Projected Replacements, 1997-2001

Single Channel Radios

1. HF: Radios AN/MRC-138 and AN/PRC-104 in use at the start of this period will be replaced with an improved HF radio capable of supporting digital voice and data communications.

   VHF/UHF: VHF radios AN/PRC-68 and AN/GRC-SINCGARS and UHF radios AN/MRC-138(UHF), AN/PRC-113, AN/PSC-3 and AN/VRC-83 will be replaced by an integrated VHF/UHF radio.

   EHF: Single Channel Objective Tactical Terminal (SCOTT).

Multichannel Radios

2. EHF: Satellite Communications Central AN/TSC-96A to be replaced by an EHF multichannel satellite system terminal.
3. VHF: Radio Set AN/MRC-139 may be replaced with the UHF JTIDS terminal or a system with similar capabilities.
4. As required for communications with other Services/allies.

Other Systems/Equipment

5,6. Main Distribution Frame, Technical Control and Switching Facilities. The SB-3865 ULCS and the AN/GYC-7 ULMS will be replaced by a system that will significantly improve the capability to provide simultaneous voice, data, and video service and that will also provide an ingegrated technical control facility; e.g., an integrated services digital network (ISDN) switch and controller. Individual single channel and multichannel radios will be provided with a

Other Systems/Equipment (Cont'd)

technical control and interface module, which will provide telemetry regulating circuit quality and equipment performance, capable of selectively controlling the radio.

8, 9. The AN/UXC-7 facsimile, and the AN/UGC-74A(V)3 Communications Terminal in the communication center will be replaced with universal work station modules (UWSMs).

7, 11,18. The TSEC/KY-84C DLED, the TSEC/KY-57 VINSON and the TSEC/KG-36 Key Generator will be replaced by a universal communications security module.

10, 15. Telephones. The Digital Nonsecure Voice Terminal (DNVT) TA-954 and the Digital Subscriber Voice Terminal TSEC/KY-68 will remain in service through this period. Individual subscribers may also use UWSMs.

12. Digital Communications Terminal (DCT) AN/PSC-2 will remain in service through this period.

13, 14,16. The AN/UYQ-38(V) MIFASS), TCO and EUCE functions may be performed on UWSMs.

17. The ANDVT TACTERM or MINTERM may continue in use through this period.

19. The CV-3333/U Audio Digital Converter may continue in use through this period.

Figure 5-48. Marine Amphibious Unit Headquarters Node, 1997-2001 (con't)

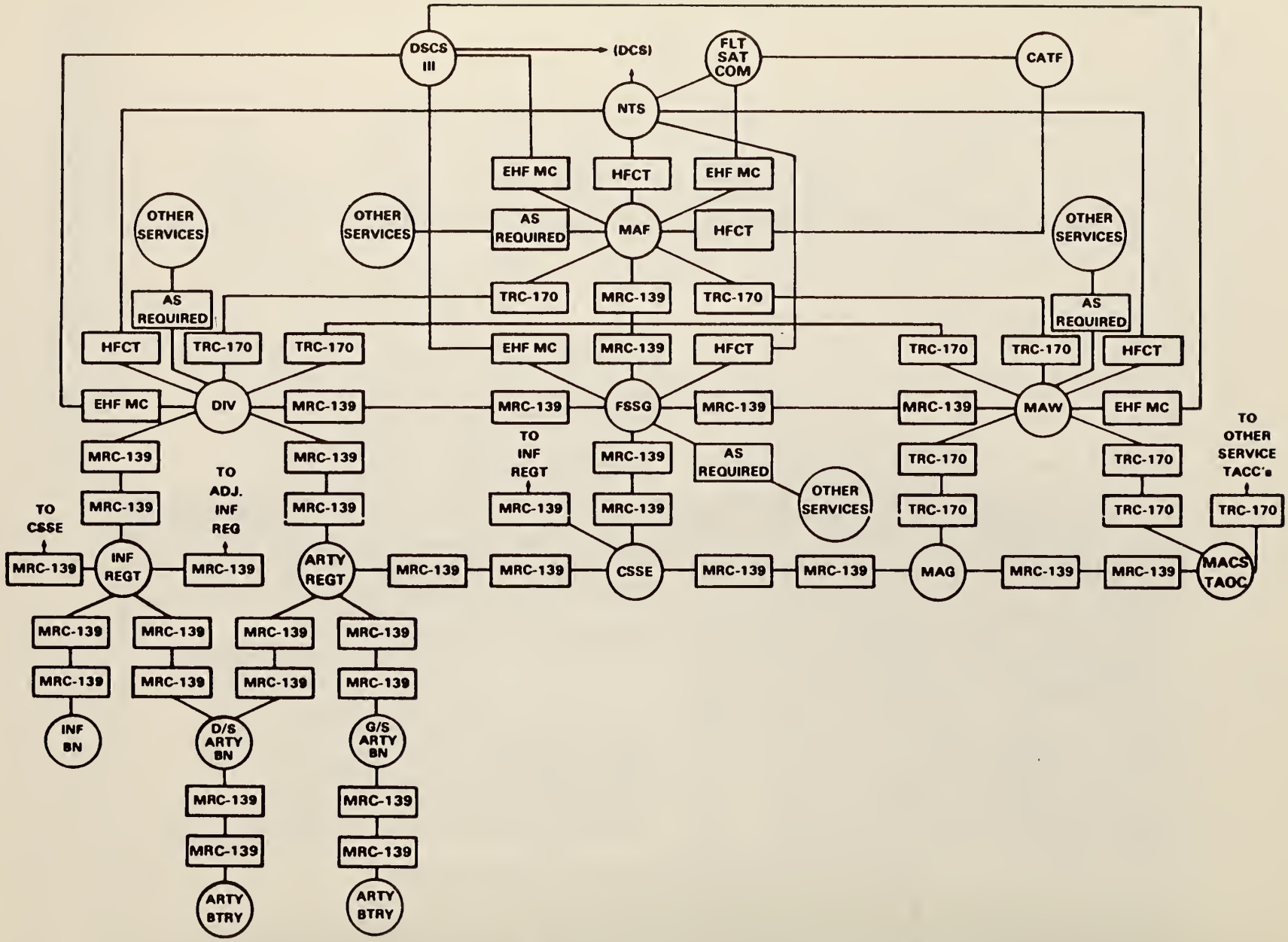

Figure 5-49. MAF Multichannel Transmission System, 2001

509 OTHER SERVICE AND DEPARTMENT OF DEFENSE COMMUNICATION SYSTEMS.

509.1 Introduction. Other Service and DoD communication systems referred to in previous sections of this chapter are described in more detail in this section.

509.2 Navy UHF Satellite Communications (SATCOM) System. The Navy UHF SATCOM System provides worldwide communications links via satellites between designated mobile units and between those units and shore sites between the latitudes of 70 degrees north and 70 degrees south. Installations which are part of this system are located on ships, submarines, and aircraft and at shore stations, to include deployed Fleet Marine Force units. The Navy UHF SATCOM System consists of information exchange subsystems for system quality monitoring, for system control, and for communications. These subsystems are:

509.2.1 Fleet Satellite Broadcast (FSB) Subsystem. The Fleet Satellite Broadcast Subsystem provides for the transmission of Fleet Broadcast message traffic in a high-level jamming environment. The subsystem has 15 subchannels for encrypted message traffic at an input data rate of 75 bps per channel, and one subchannel for frame synchronization. The subchannels are multiplexed and transmitted at 1200 bps to the satellite by the shore terminal, a NAVCAMS, or a NAVCOMMSTA, on a direct-sequence, spread-spectrum SHF link. Within the satellite, the signal is rebroadcast to the subscribers on a UHF down-link.

509.2.2 Common-User Digital Information Exchange Subsystem/Naval Modular Automated Communications Subsystem (CUDIXS/NAVMACS). This subsystem is divided into two major elements, the CUDIXS and the NAVMACS.

The CUDIXS element of this subsystem is a shore-based installation of processors and peripheral equipment that provides RF link control of the network and processing of message traffic at shore installations.

The NAVMACS element has similar equipment at subscriber terminals in ships and in the Marine Corps Satellite Communications Central, AN/TSC-96(V). The NAVMACS follows the CUDIXS link control protocol and processes message traffic at those locations.

Collectively, CUDIXS/NAVMACS provides improved ship-to-shore and shore-to-ship operational communications, and reduces writer-to-reader time, operator workload, and human error.

CUDIXS installations are located at NAVCAMS LANT (Norfolk, Virginia), NAVCAMS MED (Bagnoli, Italy), NAVCAMS WESTPAC (Finegayan, Guam), NAVCAMS EASTPAC (Wahiawa, Hawaii), and NAVCOMMSTA Stockton (Stockton, California). NAVMACS equipment is installed in most US Navy ships, to include all amphibious types, as well as in the Marine Corps AN/TSC-96(V).

509.2.3 Submarine Satellite Information Exchange Subsystem (SSIXS). The SSIXS was designed to complement existing VLF and MF/HF communication links between shore-based submarine Broadcast Control Authorities and submarines.

509.2.4 Officer in Tactical Command Information Exchange Subsystem (OTCIXS) The OTCIXS provides a two-way satellite link to support battle group over-the-horizon (OTH) command and control and tactical targeting communication requirements. OTCIXS is capable of handling both teletypewriter message traffic and processor-formatted tactical data on an automatically controlled time-shared basis over the same OTCIXS satellite channel.

509.2.5 Secure Voice Subsystem. The Secure Voice Subsystem enables the transmission of ship-to-ship, ship-to-shore, and shore-to-ship voice communications. Ship-to-shore secure voice communications beyond the immediate vicinity of the connected NAVCOMMSTA are provided by the Department of Defense's AUTOSEVOCOM network. The subsystem transmits and/or receives secure voice communications via a half-duplex, push-to-talk satellite link. Control of the voice channels is maintained by the secure voice control operator at the responsible NAVCAMS/NAVCOMMSTA within a satellite footprint. The Marine Corps AN/TSC-96(V) provides access to the Secure Voice Subsystem. With few exceptions, all US Navy ships, as well as flag-configured Maritime Prepositioning Ships (MPS), have a Secure Voice Subsystem capability.

509.2.6 Tactical Intelligence Subsystem (TACINTEL). The TACINTEL Subsystem is used for transmission of special intelligence communications.

509.2.7 Teletypewriter (ORESTES) Subsystem. The ORESTES Subsystem is an expansion of existing teletypewriter communication networks, but uses satellites as relay stations. Circuits employing the ORESTES include full-period terminations for beyond-line-of-sight (BLOS) tactical and report-back use, as well as full-period and on-call contingency links, and as back-up for networks such as CUDIXS/NAVMACS and TACINTEL.

509.2.8 Tactical Data Information Exchange Subsystem (TADIXS). The TADIXS Subsystem provides the means of broadcasting tactical data-link traffic on a one-way transmission path from shore sites to fleet-based Navy Cruise Missile Combat Support Systems (CMCSSs).

509.2.9 Demand Assigned Multiple Access (DAMA) Subsystem. The UHF DAMA Subsystem was developed to multiplex several baseband subsystems, or users, on one 25 kHz satellite channel thus effectively adding circuit capacity to the UHF SATCOM system. The Marine Corps AN/TSC-96(V) equipment is being modified for DAMA operation at about the same rate as the entire UHF SATCOM system is being modified. Interim procedures are available to ensure interoperability between DAMA and non-DAMA subscribers to the Secure Voice, Teletypewriter, and CUDIXS/NAVMACS Subsystems. TACINTEL subscribers within a particular satellite footprint or operating area will be switched to DAMA simultaneously without a DAMA/non-DAMA transition. Future plans include the transition of OTCIXS, TADIXS and SSIXS to DAMA operation.

509.2.10 Control Subsystem. The Control Subsystem senses and collects system status information and provides the means to control system resources. The Naval Telecommunications Command Operations Center (NTCOC) controls the operations of Naval satellite communications assets, assisted by the NAVCAMS and NAVCOMMSTAS, and in coordination with the USAF Satellite Operations Center and certain contractor-operated control facilities.

509.2.11 LEASAT Telemetry, Tracking, and Command Subsystem. This subsystem provides the means for the Navy, in coordination with the contractor, to track and control leased communication satellites.

509.2.12 Quality Monitoring Subsystem. The Quality Monitoring Subsystem permits the four NAVCAMS and one NAVCOMMSTA to monitor, analyze, and resolve system and equipment related problems. Shipboard UHF SATCOM subscribers, using currently available quality monitoring equipment, will have a limited capability to monitor and possibly correct system performance.

509.3 U.S. Navy Super High Frequency (SHF) Satellite Communications. The U.S. Navy will make limited use of satellite communications in the SHF band. Five NAVCAMS, LCC 19, and LCC 20 will be equipped with jam-resistant SHF satellite terminals to provide service to the embarked major fleet commanders. Defense Satellite Communication System (DSCS) satellites DSCS II and DSCS III, operating in the 7/8 gHz band, will be used to link the embarked commanders with other authorities through WWMCCS.

509.4 U.S. Navy Extremely High Frequency (EHF) Satellite Communications. The Military Strategic, Tactical and Relay (MILSTAR) satellite communications system, designed for the post-1990 era, will operate in the EHF band at an uplink frequency of 43.5 - 45.5 GHz, and a downlink frequency of 20.2 - 21.2 GHz with processing transponders and cross-links. MILSTAR will also provide UHF access for compatibility with the present inventory of UHF terminals. The MILSTAR satellite constellation will consist of satellites in geostationary and inclined circular orbits, spaced to give maximum world coverage, to include the polar regions. MILSTAR will provide highly survivable low-data-rate communications to high priority users. The system uses a standard waveform that ensures interoperability between all MILSTAR users. Eventually, landing force elements will be equipped with SCOTT for use with the MILSTAR system.

509.5 Naval Modular Automated Communications System (NAVMACS) AN/SYQ-7(V)( )
NAVMACS is a shipboard automated message processing system of modular design, in which component parts are assembled into sets of varying capabilities to satisfy the needs of individual ship types. NAVMACS is designed to be compatible with the Fleet Broadcast, the CUDIXS and ship-shore full period terminations (FPT). All versions of NAVMACS provide for the screening of four message channels for ownship guard list, message logging, serial checking, minimal message retention and CUDIXS transmit. Larger versions of NAVMACS include mass message retention and distribution to and from remote terminals throughout the ship. Generally, each larger system includes the functions of the smaller systems. The capabilities of the various NAVMACS versions are summarized as follows:

NAVMACS CAPABILITIES

1.	MESSAGE SCREENING (4 CHANNELS)				
2.	MESSAGE LOGGING				
3.	MESSAGE SERIAL CHECKING	AN/SYQ-7(V)1			
4.	MINIMAL MESSAGE RETENTION				
5.	CUDIXS TRANSMIT		AN/SYQ-7(V)2		
6.	CUDIXS RECEIVE				
7.	IMPROVED TRAFFIC PROCESSING			AN/SYQ-7(V)3	
8.	ADDED MESSAGE ACCOUNTABILITY				
9.	MESSAGE STORAGE ON MAG TAPE				
10.	MESSAGE RETRIEVAL				
11.	COMM REPORT GENERATION				
12.	IMPROVED TRAFFIC PROCESSING				
13.	SUPPLY COMMUNICATIONS INTERFACE				
14.	ADVANCED MESSAGE ACCOUNTABILITY				
15.	MASS MESSAGE RETENTION ON TAPE/DISK				
16.	IMPROVED TRAFFIC PROCESSING				
17.	DUPLICATE MESSAGE SEARCHING				
18.	ELECTRONIC MESSAGE RELEASING				
19.	INTERNAL ROUTING/DISTRIBUTION TO REMOTE TERMINALS				AN/SYQ-7(V)5

509.6 Single Audio System (SAS). The Single Audio System (SAS) is a shipboard automated switching system that controls the routing of voice radio circuits from the operator's handset to the appropriate crypto equipment and then to the intended receiver/transmitter. The heart of the SAS is the secure voice switch that can be programmed to permit authorized users to select, at will from a remote position in the ship, entry into any voice radio net for which the switch and associated equipment have been programmed.

509.7 Defense Communications System (DCS). The Defense Communications System, consisting of both government and commercial facilities, provides global telecommunications service to the Department of Defense and certain other authorized users. The Defense Communications Agency manages the DCS, but the Services operate and maintain the system. Tactical communications that are organic to combat, combat support, and combat service support commands/units are not part of the DCS. Major subsystems and networks of the DCS are the AUTODIN, AUTOVON, AUTOSEVOCOM, and the DSCS. Major improvements in the DCS have been made recently and are in progress. Some of these are:

509.7.1 Defense Switched Network (DSN). The existing AUTOVON and other telephone systems will be converted gradually into a new system called the Defense Switched Network (DSN). Phase I of DSN will be fully operational in FY87 and will provide telephone, data, and video services in portions of the Western Hemisphere. Overseas acquisition will be completed and a major portion of Phase I will be operational in Europe and the Pacific. The conversion of AUTOVON to the DSN will mean the replacement of manpower-intensive telephone systems with more modern survivable networks.

509.7.2 Integrated AUTODIN System (IAS). IAS will replace the 20-year-old AUTODIN system that has been DoD's primary means of transmitting and receiving

formal message traffic. IAS consists of three components: the Defense Data Network (DDN), the Inter-Service/Agency Automated Message Processing Exchange (I-S/A AMPE) and the BLACKER program. Each component begins fielding in 1989, with full system operational capability to be achieved in the mid 1990's.

509.7.3 Defense Data Network (DDN). The DDN is an on-line, real-time, terminal-to-terminal and terminal-to-host packet-switched network providing integrated data telecommunications services world wide. The Marine Corps Data Network (MCDN) will enter the DDN through packet switching nodes (PSNs) at various locations throughout CONUS and overseas. The DDN is operated under the auspices of the Defense Communications Agency (DCA). All Services will be required to achieve DDN integration by the 1990's. Ideally, DDN will then serve to eliminate duplicate routes employed by the various Services and inter-service networks. End-to-end encryption will permit integration of the several classified segments operating at various security classification levels into a single classified segment, thus providing increased capability and responsiveness to information exchange needs.

509.7.4 Inter-Service/Agency Automated Message Processing Exchange (I-S/A AMPE). This program fields approximately 90 I-S/A AMPE systems replacing a wide variety of the current Service/Agency exchanges and AUTODIN switching centers. Existing systems do not provide the requisite security to support full DoD operational requirements. I-S/A AMPE will improve the survivability of the record message network by increasing the number and dispersal of switching sites.

509.7.5 BLACKER. The BLACKER component provides end-to-end multilevel security protection to the DDN and the I-S/A AMPE.

509.7.6 Defense Satellite Communications System (DSCS). In order to improve the jam-resistance of this major satellite system, antijam modems have been installed at selected key locations, and an antijam network between these and other locations has been established.

509.7.7 Secure Voice System (SVS). The number of secure voice users will be increased significantly with the implementation of the Secure Voice Improvement Program (SVIP). This program shares equipment and facilities with the Federal Secure Telephone System and will be interoperable with other DoD and civilian networks. Under the Secure Conferencing Project (SCP), survivable secure voice and a graphics conferencing capability will be provided to command centers worldwide.

509.8 Joint Tactical Information Distribution System (JTIDS). JTIDS is a high-capacity, jam-resistant, secure, complex, and expensive communications, location, and identification system. Currently planned to be used in air defense and air control roles, JTIDS will provide standardization and interoperability among U.S and NATO forces involved in those warfare areas. JTIDS is a time-division, multiple-access (TDMA) radio system operating in the frequency range of 960 to 1215 mHz. Until October 1985, there were two separate JTIDS development efforts underway in the United States. The Air Force and Army concentrated on one version and the Navy and Marine Corps

pursued a more costly and complex approach. On 16 October 1985 the Secretary of the Navy directed that the development of the Navy/Marine Corps version of JTIDS be stopped and that these Services join with the Air Force/Army program, of which the Air force is the executive agent.

JTIDS will function as the means to interconnect certain different tactical data systems, and will also provide limited secure voice links. Tactical digital link "J", or TADIL J, is a standard, the equivalent of NATO LINK-16, which will provide the common, bit-oriented messages, transmission and reception rules, and operating procedures between tactical data systems using JTIDS as their intercommunications medium. The Air Force will make extensive use of JTIDS, with lesser applications by Naval aviation, while the Army will use JTIDS in its conventional air defense role.

The tactical air operations center (TAOC) will be the first Marine Corps operational facility to be equipped with JTIDS. The JTIDS Class 2H terminal will be integrated with the AN/TYQ-23 Tactical Air Operations Module (TAOM). This application of JTIDS will provide the TAOC with a high-capacity, secure, anti-jam data link (LINK-16 and TADIL J) and voice communications to interoperate with other Services' air command and control platforms, and to control other Services' JTIDS-equipped aircraft. Current plans do not include the installation of JTIDS terminals in Marine Corps aircraft. As plans develop, the tactical air command center (TACC) may be the second Marine Corps operational facility to be equipped with JTIDS. The installation of JTIDS/TADIL J into the TAOC and TACC would meet the minimum interoperability requirements for any joint or NATO operations in which the Marine Corps would participate. However, other Marine Corps tactical data systems are potential candidates to use the communications capabilities of JTIDS in the future.

509.9 Mobile Subscriber Equipment (MSE). The U.S. Army has embarked on an eight year program to acquire and field a battlefield communications network not unlike a commercial cellular telephone system. The MSE will tie together more than 8,000 mobile radios, 1,400 switching centers, and 25,000 telephones, using equipment already designed or available and based on a system in use in the French and Belgian armies. The MSE will be provided to five U.S. Army corps and 26 active, reserve, and National Guard divisions. With this new system, the Army will be able to have voice, facsimile, and data communications within and between fixed and mobile elements. MSE will integrate both wire and radio systems, will use discrete addresses for each subscriber in a given tactical area, and will automatically search for the addressee and connect the message originator to him. Figure 5-50 depicts the proposed employment of MSE within an Army Corps area. The Marine Corps has no plans to acquire MSE equipment. Interoperability with Marine Corps systems will be achieved using joint standards incorporated in the ULCS.

509.10 NATO Integrated Communications System (NICS). NATO command and control facilities are designed to direct the conventional land, sea and air forces of the Alliance against a Soviet attack. NATO C^2 has the capability to support escalation from conventional combat to tactical nuclear war and ultimately to strategic nuclear war, if required to stop Soviet aggression. The communications network which supports NATO command and control at the highest levels is the NICS. NICS provides a flow of information among the

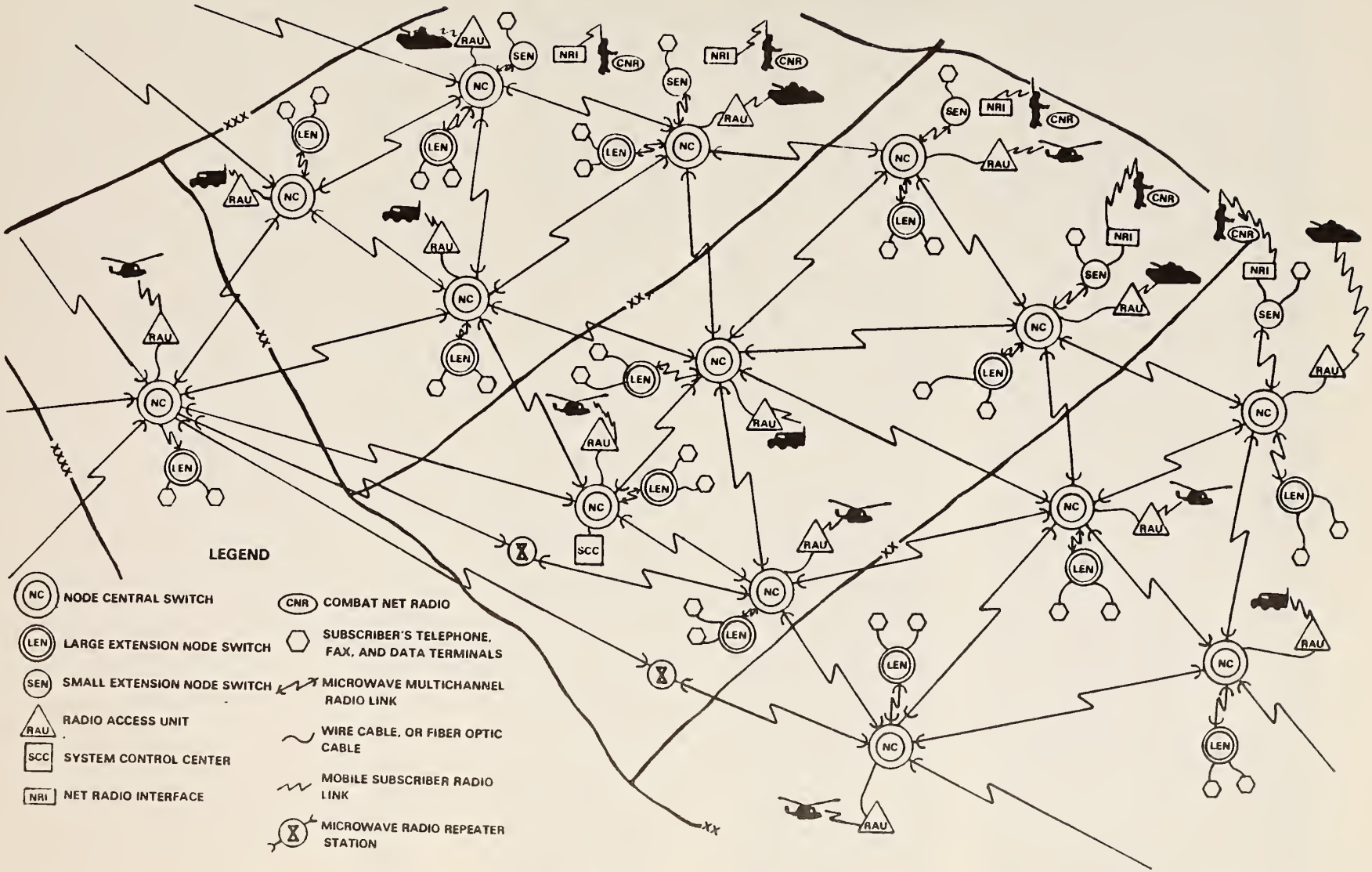

Figure 5-50. Mobile Subscriber Equipment (MSE) in a U.S. Army Corps Area

political leaders of the member states; among the three major military commands, Supreme Allied Commander Europe, Supreme Allied Commander Atlantic and Commander in Chief Channel, and their principal subordinate commanders; and among these military commanders and political authorities. Each nation is responsible for the command, control and communications of its own conventional forces, however. NICS links the national capitals and the major and principal subordinate commanders using leased national commercial telephone and telegraph, microwave, tropospheric scatter, and satellite radio systems, and fiber optic cables, combined with NATO military infrastructure communications systems and security devices. NICS includes or supports the Telegraph Automatic Relay Equipment (TARE) network, the Initial Voice Switched Network (IVSN), the Status Control and Alert Reporting System (SCARS), and the ACE HIGH transmission system extending from Norway to Turkey. NICS is gradually being converted from an analog to a digital system.

The Alliance thus has a reasonable and responsive long-haul communications network which is being improved to give even better service. Efforts are being made to provide interfaces with national tactical and civil systems. Further, standards are in place, and more capable new standards, such as Open Systems Interconnection (OSI) are being prepared. Funding is being made available to integrate airborne, sea, and land surveillance and warning systems and to tie these into the Alliance command, control and communications network. Marine Corps elements conducting NATO combat operations would not normally be interconnected directly with the NICS, but an indirect connection via a senior joint or combined command would be likely.

Management of the NICS and the function of acquiring and integrating command and control information systems are the responsibility of the NATO Communications and Information Systems Agency (NACISA), which is located in Brussels, Belgium. NACISA is developing an integrated NATO C^3 architecture and master plan which is based on the threat, operational requirements and priorities, available resources, technology, and other factors. This system architecture, through the master plan, will be the basis for C^3 resource procurement into the next century.

CHAPTER VI
MARINE CORPS AUTOMATED INFORMATION SYSTEMS (AISs)

600 INTRODUCTION

600.1 Purpose. This chapter presents an overview of the administrative AISs which have significance for deployed FMF units. Aspects of some of the AISs contained herein may not be useful in a deployed scenario, but certain subsystems or deployable modules of these AISs greatly enhance a deployed unit's capability. Primary categories of support center around logistical and manpower concerns for both ground and aviation elements. Specific situations will dictate the degree of administrative AIS support required for deployed units. In no case will administrative AIS support impede mobility, or detract from combat capability.

600.2 Scope. SECNAVINST 5231.1B defines an Information System (IS) as the people, equipment, and facilities operating together in accordance with established procedures to collect, refine, combine, communicate, store, or retrieve information. Information technology is defined as any technology used to process information and includes hardware, software, text processing, data communications, other communicators, micrographics, reprographics, printing, and other information processing functions. This chapter includes discussion of information technology, AISs, and telecommunications in support of deployed FMF units. These resources include:

- Aviation AISs
- Logistics AISs
- Manpower/Pay AISs
- Policy/Plans/Operations AISs
- JINTACCS Automated Message System (JAMS)
- Joint Matters/Strategic Mobility Sponsored AISs
- Automated Data Processing Equipment for the Fleet Marine Force (ADPE-FMF) (Green Machines)
- FMF End User Computing Equipment (FMF-EUCE)
- Deployed Force Automated Services Center (DFASC)
- MAGTF Automated Services Center (MASC)

601 AVIATION AUTOMATED INFORMATION SYSTEMS

Marine Corps aviation units operate in both the Marine Corps and Navy automated data processing environments. Two systems are Marine Corps unique while two are provided by the Navy. A third Navy system is currently in service but will be absorbed by another Navy system in the near future. The Marine Corps standard aviation AISs operate on ADPE-FMF equipment organic to the squadrons. Navy standard aviation AISs operate on the AN/UYK-65 computer provided to the Marine Corps units by the Navy. When the AN/UYK-65 computers are being used, data can be input directly from the Marine aircraft group (MAG) to the Navy supply/maintenance system. At the present time, the Marine aircraft wing (MAW) headquarters does not have Navy processors, and aviation-unique information currently cannot be compiled at the MAW level for staff use as a management tool. There are no current plans to provide such a capability.

AISs supporting Marine Corps aviation functions, currently and into the midrange time frame, are:

- Navy Aviation AISs.
  - Shipboard Uniform Automated Data Processing System - Real Time (SUADPS-RT).
  - Naval Aviation Logistics Command Management Information System (NALCOMIS).
  - Maintenance and Material Management System (3M) (to be absorbed by NALCOMIS).
- Marine Corps Aviation AISs.
  - Naval Flight Record Subsystem (NAVFLIRS).
  - Standard Naval Aviation Supply System (SNASS).

3M, NAVFLIRS, and SNASS currently operate on ADPE-FMF and IBM computers. When the AN/UYK-65 computer is fully available, these programs will be modified to operate on the AN/UYK-65. Full changeover is expected by FY 88.

601.1 Shipboard Uniform Automated Data Processing System - Real Time (SUADPS-RT)

a. Function. SUADPS-RT is an enhanced, automated, on-line, integrated, and interactive supply inventory management system. It uses source data automation (SDA) equipment and advanced data management techniques to provide responsive file maintenance and query capabilities. SUADPS-RT is deployable.

b. Equipment. AN/UYK-65 (V) (Honeywell DPS-6 family).

c. Interface Requirements. SUADPS-RT files are transportable to the 3M system and NALCOMIS.

d. Status. SUADPS-RT is currently operational.

601.2 Maintenance and Material Management System (3M)

a. Function. The 3M system provides integrated aeronautical equipment maintenance management support. The objective of 3M is to achieve the readiness and safety standards established by The Chief of Naval Operations (CNO), with optimum use of manpower, facilities, material, and funds. This objective is achieved by:

- Repairing aeronautical equipment and materiel at the level of maintenance that will make the optimum use of resources.
- Protecting weapons systems from corrosive elements through the implementation of an active corrosion control program.
- Implementing a systematic, planned, preventative maintenance program.
- Collecting, analyzing, and using pertinent data to improve materiel readiness and safety.

The 3M system provides the commander with information on part failure, work output, aircraft readiness, and parts requirements. It uses a three level maintenance concept - organizational, intermediate and depot. 3M is a deployable system.

b. Equipment. Currently, 3M data collection is accomplished on ADPE-FMF, and mainframe processing occurs at the nearest Regional Automated Services Center (RASC).

c. Interface Requirements. None.

d. Status. Fielded; to be replaced by NALCOMIS in FY 88.

601.3 Naval Aviation Logistics Command Management Information System (NALCOMIS)

a. Function. NALCOMIS is an automated management information system that will provide aviation maintenance and material managers with timely, accurate, and complete information on which to base day-to-day decisions. The overall objective of NALCOMIS is to implement a system that will provide assistance for the worker, supervisor, and manager at the organizational maintenance activity (OMA), intermediate maintenance activity (IMA) and supply support center (SSC) levels. NALCOMIS will be a deployable system.

b. Equipment. Each MAG and its squadrons will have a Navy-provided AN/UYK-65(V). Marine Corps Air Stations will be provided a commercial version of the AN/UYK-65(V) for use in support of NALCOMIS.

c. Interface Requirements. The hardware for NALCOMIS will normally be connected by wire to interactive terminals throughout the MAG. NALCOMIS hardware will be dedicated to processing the data previously contained in 3M. It will interoperate with SUADPS-RT and SNASS.

d. Status

1. Hardware. NALCOMIS hardware was acquired for full implementation in MAG 14 and its squadrons during FY 83. Hardware for MAG's 11 and 31 was provided during FY 86 to support the IMA and SSC. All other MAG's will receive hardware to support NALCOMIS in the IMA and SSC during FY 87. Squadrons outside MAG 14 will receive hardware to support NALCOMIS at their OMA's during the FY 87 - FY 90 period.

2. Software. NALCOMIS software is being implemented in two phases. Phase I, entitled NALCOMIS Repairable Management Module (NRMM), has been implemented in MAG's 11 and 31 for IMA and SSC support. NRMM will be implemented in the remaining MAG's (less MAG 14) during FY 87. Phase I OMA support software will be implemented during the FY 87 - FY 90 time frame. MAG 14 was designated for the prototype program for Phase II NALCOMIS software. Phase II software is currently implemented in MAG 14 for IMA and SSC support. Software for the MAG 14 squadrons' OMA's is under development with implementation anticipated by May 1987.

601.4 Naval Flight Record Subsystem (NAVFLIRS)

a. Function. NAVFLIRS is a subsystem of NALCOMIS. The major purpose of this system is to construct an automated data base which will contain the data elements needed to manage Marine Corps aviation assets (aircraft and aircrews). It includes data on all scheduled flights. The data base is derived from daily flight activity at the squadron level. Data are entered on ADPE-FMF and processed at the RASC or DFASC depending on geographical location. Input transactions are prepared on each scheduled flight, completed or not, and for each flight crew member on completed flights. NAVFLIRS is a deployable system.

b. Equipment. NAVFLIRS receives data input from ADPE-FMF or the replacement FMF-EUCE. Prime processing will be accomplished at the nearest DFASC/RASC. When NALCOMIS is fully implemented, NAVFLIRS will be processed on the AN/UYK-65.

c. Interface Requirements. NAVFLIRS is a subsystem of NALCOMIS.

d. Status. NAVFLIRS became operational on 1 January 1987. It replaced the Flight Readiness Evaluation Data System (FREDS).

601.5 Standard Naval Aviation Supply System (SNASS)

a. Function. SNASS compiles the SUADPS output from all MAGs twice each month. Currently, output is printed on microfiche and distributed to all MAWs and MAGs. In a deployment, some other medium may be required as a substitute for the microfiche. Functionally, SNASS is used to locate and transfer aviation spare parts stocked within the MAG, and from one MAG/MAW to another.

b. Equipment. DFASC/RASC equipment is currently used to compile and process SNASS data.

c. Interface Requirements. None.

d. Status. Fielded in all MAGs.

602 LOGISTICS AUTOMATED INFORMATION SYSTEMS

602.1 General

The logistic functions requiring deployable AIS capabilities are supply, maintenance, embarkation, and transportation. As currently performed in the FMF, these functions may be expected to undergo significant operational and doctrinal changes through the 1990's. Moreover, there will be procedural changes necessitated by the transition from existing AISs to the Marine Corps Standard Supply System (M3S). Table 6-1 lists current and future systems.

Table 6-1. Logistics Automated Information Systems

FUNCTION	CURRENT CLASS I SYSTEMS	FUTURE CLASS I SYSTEMS
Supply	Support Activities Supply System (SASSY)	M3S
Maintenance	Marine Corps Integrated Maintenance Management System (MIMMS)	M3S
Embarkation	Standard Embarkation Management System (SEMS)	Computer-Aided Embarkation Management System (CAEMS)
	NONE	Combat Service Support Information Network (CSSIN)
	NONE	Maritime Prepositioning Ships Decision Support System (MDSS)
	NONE	Marine Automated Cargo Throughput Documentation System (MACTDS)

602.2 Supply. The supply function is one of the oldest and largest users of AISs. Automated support has become so ingrained in daily supply operations that substitution of manual techniques would probably cause an unacceptable degradation of support. In a deployed/employed scenario, the supply, maintenance, and embarkation AISs will encompass only those essential functions required to fulfill the basic mission of the particular situation. These systems will be processed on the minimum hardware configuration that satisfies the requirements, and employ minimal manpower for operation and/or analysis. Higher level or more detailed processing will be accomplished by rear echelons.

602.2.1 Supported Activities Supply System (SASSY)

a. Function. SASSY currently provides the primary supply accounting functions, requisitioning capability, requirements determination, and asset visibility for all FMF units. It was designed to operate in a garrison environment on mainframe computers and therefore was not readily deployable. However, a deployable subsystem has been created for processing on the DFASC. SASSY does not possess the capability to account for subsistence, ammunition, bulk fuel, medical supplies, or lumber.

b. Equipment. SASSY transaction input programs reside on ADPE-FMF devices at the unit level. The deployable subsystem of SASSY is in use at the DFASC/RASC. It provides for a local data base and possesses a capability for generating local reports on ADPE-FMF devices. SASSY programs provide an interface with the local MIMMS data base. Input to SASSY is accomplished by delivery of diskettes (floppy disks) from the user to the RASC. Transaction status data for use at the user level is obtained via a returned ADPE-FMF diskette, to update the local files. For deployed units, the data on diskette can be converted to paper tape and entered into the Naval Telecommunications System for transmission to the cognizant, external SASSY Management Unit (SMU), or can be sent to the nearest RASC via courier.

c. Interface Requirements. Data files produced by SASSY are transportable to MIMMS, Marine Air-Ground Financial Accounting and Reporting System (MAGFARS), and other authorized supply systems using standard military transaction formats.

d. Status. SASSY is currently in use and will be replaced by M3S in the FY87-FY90 period. The portion of SASSY written for the DFASC is currently deployed.

602.2.2 Marine Corps Standard Supply System (M3S)

a. Function. M3S is presently being developed as a replacement for SASSY and MIMMS. It will, however, be capable of replacing most of the logistics AIS's, encompassing both the retail and wholesale functions for FMF units and the supporting establishment. M3S will support and consolidate the functions now performed by SASSY, Marine Corps Unified Material Management System (MUMMS), Direct Support Stock Control System (DSSC) and a number of base property control systems. The supply functions and operations currently practiced in the FMF will undergo little change. The system will be capable of interactive or batch input through interactive terminals or SDA devices. An M3S goal is to develop a system whose subsystems will operate in the same manner whether deployed or in garrison and will provide for phased commitment of logistics elements in an objective area. Support of FMF units will be maintained by a central accounting unit configured as a retail issue point (RIP). FMF units will be supported through the RIP unit by materiel issue points (MIPs), established geographically or task-organized to support contingency plans. Portions of M3S will be deployable.

b. Equipment. FMF-EUCE and DFASC.

c. Interface Requirements. M3S will be interoperable with the Standard Accounting, Budget and Reporting System (SABRS) which is not a deployable system.

d. Status. M3S will be implemented in phases during the FY86-FY90 timeframe.

602.3 Marine Corps Integrated Maintenance Management System (MIMMS). The current maintenance AIS is MIMMS.

a. Function. MIMMS provides equipment maintenance status for all FMF units. It includes repair parts requirements, equipment modification status, and maintenance actions pending or completed for a particular item of equipment. MIMMS consists of the following subsystems:

1. Headquarters Maintenance Subsystem (HMSS). This subsystem provides maintenance management information for the management of ground equipment to the Marine Corps Logistics Base (MCLB), Albany, Georgia, and HQMC weapons systems managers.

2. Field Maintenance Subsystem (FMSS). This subsystem supports all ground equipment maintenance performed at the organizational and intermediate maintenance echelons in the FMF, supporting establishment, and selected Marine Corps Reserve units. In a deployed status, the FMSS is processed by the DFASC. FMSS files are automatically updated in terms of materiel requisitions, issues, turn-ins, and status information. This is accomplished through an automated interface with SASSY. Upon processing, FMSS produces status and equipment readiness reports for all levels of MAGTF commands on a daily or periodic basis. FMSS also provides selected information to the MIMMS HMSS on a scheduled basis; e.g., equipment repair order history data, equipment status, and readiness data.

b. Equipment. MIMMS is a two-level system. Initial input is recorded on diskettes by user units with ADPE-FMF devices. These transactions then update the unit's data on the ADPE-FMF data base prior to their being forwarded to the DFASC for processing. Output is returned to the user on diskettes and paper.

c. Interface Requirements. Data files produced by MIMMS are transportable to SASSY.

d. Status. MIMMS is currently operational and will be incorporated into M3S during the 1987 time period.

602.4 Standard Embarkation Management System (SEMS)

a. Function. SEMS provides a standardized embarkation data system applicable to all Marine Corps and selected Navy units. It permits the establishment and maintenance of embarkation data bases at the battalion, squadron,

and separate company level. It also provides the capability to manipulate and consolidate data based on the embarkation task organization and transportation mode. The data bases can be updated readily in garrison, during embarkation, and in a deployed area, for all movement operations. SEMS also produces reports for embarkation management, lift requirements, loading-plan documentation, and selected reports defined by the user.

The cornerstone of embarkation planning is the development of embarkation data bases at the battalion, squadron, and separate company level. These data bases are developed and maintained by each unit on ADPE-FMF devices, and consist of five basic files:

- Unit profile.
- Billet (personnel).
- Cargo.
- Vehicle.
- Pallet.

These data are provided, on a periodic or as-required basis. When directed or alerted for a mission, the data is processed and manipulated using record-linking to produce output data and reports. Upon determination of the embarkation task organization, unit and detachment embarkation data are consolidated at the embarkation team, unit, element, or group level. Output consists of standard embarkation reports and other user-defined reports. The various types of SEMS record-linking are listed below. They will vary depending on the transportation mode.

- Mobile loading.
- Palletizing.
- Troop space assignment.
- Floating dump assignment.
- Landing serial/fuselage station assignment.
- D-1 assignment.
- Unitized cargo assignment.
- Hazardous cargo and munitions assignment.
- Transportation mode assignment.
- Landing force material assignment.
- Priority number assignment.
- Hold and level assignment.

Logistics Applications of Marking and Reading Symbols (LOGMARS) or bar code scanning technology is being used with the integrated system concept to provide a quick and efficient means for recording key data elements in updating the status or location of specific principal end items or containers.

b. Equipment. ADPE-FMF.

c. Interface Requirements. None.

d. Status. Operational.

602.5 Computer-Aided Embarkation Management System (CAEMS). CAEMS will be a microcomputer-based AIS that will assist Marine Corps planners at all levels of command from FMF and MAF headquarters down to and including battalions and squadrons in developing embarkation plans for amphibious and other rapid deployment operations. It will reduce the time required for embarkation planning and assist in making optimal use of allocated lift resources including amphibious ships, Military Sealift Command (MSC) ships, maritime prepositioning ships (MPS), and military aircraft. CAEMS will include three separate but interrelated systems: The staff planning system, the load planning system, and the unit embarkation database management system.

a. Functions. CAEMS will include:

- The capability to maintain all applicable automated files and databases.
- Computer programs to create and maintain databases, conduct staff planning, conduct load planning, and produce loading and embarkation plans in text and graphic form.
- Communications software needed to permit the exchange of data between CAEMS computers and between CAEMS and the Air Force Computer Aided Load Manifesting (CALM) system.
- Incorporation of the Air Force CALM system within CAEMS.

In addition, CAEMS will include system service functions such as the capability to perform word processing and to generate reports.

b. Equipment. CAEMS will operate on FMF-EUCE equipment. There will be five general types of equipment configuration with some variations in configuration within types based on supported unit requirements. The types will be:

- High level staff planning equipment configuration employed by FMF and MAF headquarters and with a lesser capability for MAB and MAU headquarters.

- Intermediate level staff planning equipment configuration used at division, aircraft wing, infantry regimental headquarters, force service support group headquarters, and brigade service support group headquarters.

- Load planning system equipment configuration employed by battalions, squadrons, combat service support element embarkation teams and Marine air control group headquarters.

- Special purpose CAEMS equipment configuration employed by landing force training commands; Marine Corps Logistics Base, Albany; and the Marine Corps Central Design and Programming Activity (MCCDPA), Albany.

- Unit embarkation database management equipment configuration employed by all FMF units from MAF headquarters down to and including battalion and squadron level for unit embarkation database management. Units listed above as receiving CAEMS equipment configurations will use that equipment for embarkation database management. Other units will use their FMF-EUCE.

c. Interface Requirements. CAEMS will have external interfaces, primarily at the high level staff planning and load planning systems. Interfaces will be provided with:

- MAGTF Lift Model II.

- M3S.

- Air Force CALM System.

- Navy Management Information System (MIS)/Tactical Information Processing System (TIPS) element of the Integrated Tactical Amphibious Warfare Data System (ITAWDS).

- Defense Communications System.

d. Status. Software is currently under development. An IOC of early FY89 is planned. CAEMS will replace SEMS.

602.6 Combat Service Support Information Network (CSSIN)

The results of the development of many and varied logistic AISs by several independent efforts of the Marine Corps and other DoD agencies have resulted in duplication of effort, redundancy of certain AIS capabilities with gaps in AIS capabilities in other areas, and little or no interoperability among many of the systems. Because of this, the MAGTF commander often does not have a complete, integrated family of combat service support (CSS) AISs for use in directing, coordinating and supervising CSS during all phases of an amphibious operation or other deployment. To remedy this situation, a requirement for the development of a CSSIN was established.

a. Function. The primary purpose of this network of CSS AISs will be to assist in the rapid deployment and sustainment of a MAGTF in combat operations. In addition, the CSSIN will be employed on other occasions to assist in exercises and routine deployments, to prepare and update contingency plans, and to maintain day-to-day accountability and visibility for supplies and equipment. CSSIN will consist of not one single AIS but a family of CSS AISs.

b. Equipment. The various members of the family of CSS AISs will operate on differing sizes of computers (i.e., mainframe, mini, micro), will be located at various levels of command, in both the FMF and the supporting establishment, and will perform distinct but interrelated CSS functions.

c. Interface Requirements. CSSIN represents the interface of MAGTF-II, SUADPS, MDSS, CAEMS, CALMS, MACTDS, and such other systems as prove necessary to support the MAGTF commander's warfighting readiness in an objective area.

d. Status. Requirement statements for CSSIN are being refined and will form a basis for examination and evaluation of alternative methods for meeting user requirements.

602.7 Maritime Prepositioning Ships Decision Support System (MDSS)

a. Function. MDSS is the AIS developed to provide a basic logistics management capability tailored to a specific application, that of managing and controlling the more than 20,000 principal items available to maritime prepositioned brigades. The system is designed to account for, determine the location of, track and manage maritime prepositioning ships (MPS) assets as they leave the ships and move through marshaling yards and into the amphibious objective area (AOA). MDSS provides MPS information at all command levels and can be employed to support MPS planners in performing all planning and management functions with respect to MPS operations, exercises or actual contingencies.

b. Equipment. The MDSS currently operates on portable Compaq 286 microcomputers configured with 30 megabyte hard disks. It is anticipated that the ultimate hardware will be the FMF-EUCE. The personal computer (PC)-based data base system PC-FOCUS was selected for MDSS use since it is readily adaptable for interfacing with the mainframe computers of the Marine Corps logistics system. As currently configured, the software includes the Crosstalk XVI communications package and the Write'n'Spell word processor.

c. Interface Requirements. MDSS currently has its own dedicated hardware and software. When equipment is selected for FMF-EUCE, MDSS may be required to interface with these new items. When the CSSIN is implemented, MDSS will interface through that network to facilities ashore in the AOA.

d. Status. MDSS has been designated a Marine Corps standard (Class I) system and is supported by MCLB, Albany, Georgia. It is not currently deployable with FMF units.

602.8 Marine Automated Cargo Throughput Documentation System (MACTDS)

a. Function. MACTDS, a system currently under study at MCLB, Albany, Georgia, in concept will enable the user to maintain control of material and assets from the high water mark forward in an amphibious objective area. Assignment of assets will be identified to unique locations within marshaling yards and/or dump sites in the beachhead. MACTDS will tie MAGTF AISs together and provide the ADP tracking for asset visibility from outload to distribution in the AOA.

b. Equipment. Since the MACTDS is still a conceptual system, equipment and software have not yet been identified.

c. Interface Requirements. If adopted, MACTDS will interface with MDSS.

d. Status. Conceptual, awaiting impetus from CMC (DC/S(I&L)), the most probable system sponsor.

603 MANPOWER/FISCAL AUTOMATED INFORMATION SYSTEMS

JUMPS/MMS is the current manpower and pay AIS. It will be replaced by the Real-Time Finance and Manpower Management Information System (REAL FAMMIS). The major objective of these manpower/pay AISs is the development of centrally managed systems with faster input, feedback, and retrieval of data by users. All data is received through unit diary transactions and processed by ADPE-FMF equipment, on-line interactive terminals, or some other SDA equipment for entry into the system. The central manpower data base is maintained at the MCCDPA, Kansas City. Manpower/pay systems are primarily batch processed. The On-Line Manpower System (OLMAN) provides an on-line retrieval capability through the data base management system (DBMS) maintained at the MCCDPA, Quantico, VA. A summary of the major manpower/pay systems is provided below.

603.1 Joint Uniform Military Pay System/Manpower Management System (JUMPS/MMS)

a. Function. JUMPS/MMS provides an automated means for recording, processing, and maintaining military personnel and pay data on a continuing basis. These functions enable processing of data on personnel procurement, distribution, promotion, classification, separation, pay, allowances, assignment, training, and their related budgets. JUMPS/MMS maintains personnel and pay records on regular Marines and reservists on active duty for a period of 30 days or longer. JUMPS/MMS does not include data on other reserve or retired personnel. JUMPS/MMS may be characterized as a distributed data-processing system with a central facility and master data base, exercising control over remote processing facilities and their local data bases.

b. Equipment. Data entry and unit level editing and retrieval for JUMPS/MMS is accomplished on ADPE-FMF.

c. Interface Requirements. None.

d. Status. JUMPS/MMS is operational though not deployable since the system design requires mainframe computers.

603.2 Real-Time Finance and Manpower Management Information System (REAL FAMMIS)

a. Function. REAL FAMMIS will provide manpower/pay management capability for Marine Corps units during the midrange timeframe. It will integrate required information currently maintained in JUMPS/MMS and Reserve Manpower Management and Pay System (REMMPS). It will also incorporate the Automated Recruit Management System (ARMS), Precise Personnel Assignment System (PRE-PAS), Retired Personnel Pay System (RPPS), Service Record Books, Officer Qualification Records, personnel financial records, Performance Evaluation Data System, individual training records, and career planning records. REAL FAMMIS will include conversationally prompted input/extract, summary retrieval, and statistical retrieval of information. It will support the commander in all environments: garrison, afloat, and deployed ashore.

The military pay portion of REAL FAMMIS will be conducted during deployments with a bookkeeping, accrual-accounting system using FMF-EUCE devices. A record will be maintained on these devices, based on a Pay-Option-Election System (POES) selected by each deployed Marine. He receives his pay based on the POES, with residuals submitted by magnetic media to Kansas City for central accrual. This bookkeeping system provides sufficient flexibility to respond to emergency situations, but does not provide an interface with the deployed manpower portion of REAL FAMMIS. All pay processing is centralized at Kansas City.

The concept for deployed processing of REAL FAMMIS encompasses the use of an ADPE-FMF/FMF-EUCE device connected to a DFASC or follow-on system at the FSSG to provide a limited manpower data base. Edited manpower and limited financial transactions will be prepared at the battalion/squadron level and then transmitted or transported to the DFASC. At the DFASC, the local manpower data base is updated and consolidated on a magnetic tape. The consolidated data are electronically transmitted via AUTODIN in batch (bulk data) form to the appropriate RASC. Alternatively, the tape may be physically transported to the RASC. A reconciliation tape of the updated transactions is returned to the DFASC for verification and purification of the local manpower data base.

b. Equipment. REAL FAMMIS is currently planned to provide processing support from the Marine Corps Finance Center (MCFC), RASCs and FMF-EUCE at the battalion/squadron level in the FMF, and a mixture of programmable and non-programmable terminals (NPTs) for the remainder of the Marine Corps. Since the local data base will contain only 6,000-10,000 characters per Marine (as compared to 20,000-plus at Kansas City) a full range of input edits may not be conducted, but the local data base will be updated where feasible. The deployable elements of REAL FAMMIS will provide a combination of operations in a stand-alone mode.

c. Interface Requirements. Data files produced by REAL FAMMIS will be transportable to the equipment at the RASC and MCFC.

d. Status. REAL FAMMIS will be fully operational in the 1990-1995 time frame.

604 POLICY, PLANS & OPERATIONS (PPO) SPONSORED AUTOMATED INFORMATION SYSTEMS

604.1 Unit Status and Identification Report (UNITREP)

a. Function. UNITREP is used to report the combat status of battalions and squadrons to the Joint Chiefs of Staff (JCS). The baseline system consists of manually-prepared coding sheets at the battalion, squadron, and separate company level. The sheets are reduced to keyboard information which is transmitted through intermediate commands to division, FSSG, and wing. The data are then transported or transmitted to the DFASC where reports and error messages are generated for review by the MAF. From the MAF, the consolidated UNITREP is transmitted to the Headquarters, FMF; to Headquarters, Marine Corps; to the CINC; and to the JCS. As the information is reviewed at each echelon, reports and error messages are also prepared. In many cases, the UNITREP is classified SECRET, therefore provisions must be made to accommodate the classified processing at all levels.

b. Equipment. The UNITREP report is prepared on a 80 column card image, normally at squadron/battalion level. IBM equipment at higher levels of command process the originating unit's card decks.

c. Interface Requirements. Worldwide Military Command and Control System, at the JCS level.

d. Status. UNITREP is operational.

605 JOINT INTEROPERABILITY OF TACTICAL COMMAND AND CONTROL SYSTEMS (JINTACCS) AUTOMATED MESSAGE SYSTEM (JAMS)

The JINTACCS program was established by the JCS to ensure that the tactical command and control systems used by the military services in joint ground and amphibious operations possess the degree of technical compatibility and interoperability necessary to achieve and improve the tactical commander's capability for commanding and controlling his forces. Software has been developed for the JINTACCS program and has been distributed to the field for implementation. The most recent software development is the JINTACCS automated message system (JAMS).

a. Function. JAMS provides an automated assist capability to JINTACCS message drafters in the tactical environment (employed/deployed). The JAMS computer program ensures that each JINTACCS message composed is properly formatted and contains valid data. The messages defined for the JAMS have rigorously specified Message Text Formats (MTF) which currently fall into five functional areas, namely:

- Air Operations.
- Fire Support.
- Intelligence.
- Maritime Operations.
- Operations Control.

MTFs for a sixth functional segment, combat service support, are currently being developed.

JAMS initially is operational on commercial Zenith Z-150 Microcomputers, which have been deployed with the operational forces since the 3rd quarter CY86. Eventually, FMF-EUCE will be deployed and JAMS will be used as a communications application on these devices.

b. Equipment. Commercially available Zenith Z-150 Microcomputers. FMF-EUCE, when deployed.

c. Interface Requirements. None.

d. Status. JAMS software is operational, currently designed for the commercial Z-150 Microcomputer. Locally programmed ADPE-FMF equipment in FMF units is able to employ this software to a limited extent. Eventually, FMF-EUCE will have JAMS capability. There is also limited JINTACCS automated message preparation assist present in the software of IAC, IIF, and TERPES of MAGIS.

606 JOINT MATTERS/STRATEGIC MOBILITY BRANCH SPONSORED AUTOMATED INFORMATION SYSTEMS

606.1 Marine Air-Ground Task Force (MAGTF) Lift Requirements and Logistics Planning Factors Model

a. Function. The MAGTF Lift Model supports the joint planning process and provides task force logistics information in support of ad hoc requirements. The system data base is updated from various manual and automated sources including deployed forces. Updated data base tapes are then passed to users. The MAGTF Lift Model is operational at Headquarters, Marine Corps; Headquarters, FMF Pacific (FMFPAC); Headquarters, FMF Atlantic (FMFLANT); and at selected MAFs. The system is maintained by commercial services contract.

b. Equipment. The data base for the MAGTF Lift Model resides on Marine Corps mainframe computers. Data is manually delivered between sites by card, tape, or printed sheets.

c. Interface Requirements. MAGTF Lift Model provides information to the Joint Operations Planning System (JOPS).

d. Status. The MAGTF Lift Model is operational, but not deployable.

606.2 Marine Air Ground Task Force (MAGTF) Lift Model II

a. Function. MAGTF II will support the information requirements of joint and strategic mobility planners at HQMC and within the operating forces. The system will replace the current MAGTF Lift Model which requires extensive manual data manipulation and has become increasingly more difficult to maintain. The proposed system will provide planners with rapid computation of lift data in support of deployment planning using both notional and actual data, provide the capability for force structure analysis, and provide timely access to information on logistics, unit locations, readiness, and personnel. The system will be capable of producing data that is compatible with the World Wide Military Command and Control System (WWMCCS) data formats that will enable the data entry into the Joint Operation Planning System (JOPS) and the Joint Deployment System (JDS). This system must be capable of processing and transmitting classified data.

b. Equipment. Mainframe computer. Data will be delivered to the system via both manual and automated means.

c. Interface Requirements. WWMCCS

d. Status. The system is scheduled for implementation during FY91. It will not be deployable.

607 FLEET MARINE FORCE AUTOMATED DATA PROCESSING EQUIPMENT

607.1 AUTOMATED DATA PROCESSING EQUIPMENT FOR THE FLEET MARINE FORCE (ADPE-FMF). ADPE-FMF provides an organic data-processing capability to battalion, squadron, and separate unit commanders. ADPE-FMF is currently used as an SDA device for input to Class I Systems such as JUMPS/MMS, SASSY, and MIMMS. It also provides support for many local programs.

a. ADPE-FMF Concept of Operation

1. Employment. The ADPE-FMF device enables FMF units to automate data entry for Marine Corps standard Class I AISs and to support some local processing. Transactions that need to be input to standard AISs are first processed on the ADPE-FMF device which produces a diskette. The diskette is sent by courier to the nearest DFASC or RASC for data aggregation and processing, or the data is transferred to paper tape and then sent by electrical means to the DFASC or RASC for processing. Output from the DFASC or RASC is returned to the originating unit by reversing the process.

2. Local Programs. Commanders desiring to develop local applications may request support from their command information systems management offices (ISMOs), in accordance with local ADP procedures. The source/object code listing of all Class II programs developed throughout the Marine Corps, which are available to commanders for local use, are maintained and published semiannually by MCCDPA, Quantico.

b. System Characteristics

1. Hardware

(a) Basic Unit. The basic unit consists of a commercially available, general-purpose minicomputer, video display, keyboard, and printer, which have been packaged to extend their environmental range and improve portability.

(b) Magnetic Tape Unit (MTU). This unit provides for bulk storage of information and serves as a means for physically transferring data.

(c) Paper Tape Punch (PTP). The punch unit provides an interface with the Naval Telecommunications System (NTS).

2. Software. The ADPE-FMF software consists of systems software and Class IA, Class IB, and Class II applications software.

(a) Systems Software. Systems software consists of compilers, operating systems, and system utilities. It is provided and maintained by the commercial supplier. The supplier retains responsibility for the maintenance of this software for the full service life of ADPE-FMF. CMC (Code CC) is responsible for maintaining liaison with the supplier regarding system software.

(b) Class I (A and B) Applications Software. Class I applications software executes on the ADPE-FMF. These programs have Marine Corps-wide applicability, and are sponsored by functional managers at Headquarters, Marine Corps. Accordingly, all requests for maintenance or modification associated with these applications will be forwarded to the appropriate headquarters functional manager through the chain of command.

(c) Class II Application Software. Class II applications software is developed to meet the local commander's needs. When a local program is developed, it must be documented and an abstract describing the application forwarded to MCCDPA, Quantico, for review and inclusion in the Class II Program Abstracts Catalog.

c. Status. ADPE-FMF is currently fielded and operational. Until it is replaced by other general or special purpose automated data processing equipment, ADPE-FMF will continue to provide SDA entry functions in the AIS community. There are currently some 842 ADPE-FMF devices in the field. These will be phased out and replaced by FMF-EUCE.

607.2 Fleet Marine Force - End User Computing Equipment (FMF-EUCE)

a. Hardware

The FMF-EUCE program is underway to provide microcomputer systems to replace the aging ADPE-FMF devices and the numerous non-standard microcomputers currently in the field. These FMF-EUCE devices will be used to support developing AISs such as M3S, REAL FAMMIS, and CAEMS. The program encompasses SDA, personal computer, automated work station, and word processing equipment. The FMF-EUCE devices will be standard, ruggedized, TEMPEST certified devices, and will meet the same environmental specifications now being met by the ADPE-FMF devices. Users will be provided a basic FMF-EUCE configuration and, where warranted, the ability to select from a list of available optional peripheral equipment and software packages.

b. Software. The FMF-EUCE devices will employ the most current version of the Micro Soft-Disk Operating System (MS-DOS) and will be capable of running the PC-FOCUS database management system (DBMS). The standard software configuration will consist of the following system software packages:

Word Processing	-	Multimate
Spreadsheet	-	Super Calc 4
DBMS	-	d Base III
Business Graphics	-	Graftalk
Composition Graphics	-	CAD Key

c. Status. The acquisition process for the FMF-EUCE has begun. The Request for Proposal Period ended on 1 December 1986. Technical Specifications are being reviewed by the Source Selections Evaluation Board (SSEB). IOC for the FMF-EUCE is planned for FY 88.

607.3 Deployable Force Automated Services Center (DFASC)

a. General. The DFASC provides the MAGTF commander with essential data processing support for brigade size or larger units which are on extended deployment or in combat. Operational testing of the DFASC confirmed that it has the capability to support existing batch-oriented Class I AISs commonly used by the FMF, to include manpower, pay, supply, maintenance, aviation and disbursing applications. Functional managers at HQMC have begun to replace the current batch AISs with on-line, interactive, DBMS-based systems. These systems will require substantially larger computers and extensive communications support which may not be available in deployed situations. When the developing DBMS-based systems are implemented deployable hardware assets with considerably more capability than the DFASC will be required.

b. Hardware. The DFASC consists of an IBM 4341 computer and associated displays, printers, disk and tape storage, and other appropriate peripheral devices mounted in a two semi-trailer van (8' x 8' x 35') configuration - the central processor/mass storage van and the ADP operations van. These vans can be transported to deployed locations by ship, rail, air, or motor transport. The DFASC is an integral part of the Force Service Support Group (FSSG) when in operational status. It is normally located within a combat service support (CSC) area.

c. Software. Programs for exercising the DFASC equipment have been designed to facilitate processing of all current FMF Class I AIS data in batch mode.

d. Maintenance. DFASC computer equipment is maintained by contractor personnel.

e. Status. The DFASC is currently operational and fielded.

607.4 MAGTF Automated Services Center (MASC)

The MASC is a conceptual replacement for the DFASC and will, if developed, provide the MAGTF commander with substantially more data processing capacity than the DFASC. The MASC will provide the capability of processing some of the DBMS-based data of the new Class I AISs.

APPENDIX A

ABBREVIATIONS AND ACRONYMS

AAA	anti-aircraft artillery
AADCCS	Army Air Defense Command and Control System
AADC	area air defense commander
AADCP	Army air defense command post
AAV	assault amphibious vehicle
AAW	antiair warfare
ABIC	Army Battlefield Interface Concept
ac	alternating current
ACCS	Army Command and Control System
ACCS	Air Command and Control Systems (NATO)
ACE	aviation combat element
ACG	acquisition coordinating group
ACLS	Automatic Carrier Landing System
ACP	Allied Communication Publication
ACS	Afloat Correlation System (Navy)
AD	advance development
AD	air defense
A-D	analog-to-digital conversion
ADA	air defense artillery
ADC	air defense command
ADCCS	Air Defense Command and Control System (Army)
ADDISS	Advanced Deployable Digital Imagery Support System
ADDS	Army Data Distribution System (Formerly the PJH)
ADLER	German artillery computer system
ADM	acquisition decision memorandum
ADM	advanced development model
ADO	advanced development objective
ADOC	air defense operations center (NATO)
ADP	automated data processing

ADP/COMM	automatic data processing and communications shelter (MAGIS-IAC)
ADPE	automated or automatic data processing equipment
ADPE-FMF	Automated Data Processing Equipment for the Fleet Marine Force
ADPS	Automated Data Processing Support (Plan)
ADPS	automated data processing system
ADS	automated data system
ADSIA	Allied Data Systems Interoperability Agency
AE	action element
AE	acquisition executive
AEW	airborne early warning
AF	audio frequency
AFATDS	Advanced Field Artillery Tactical Data System (Army)
AFB	Air Force base
AFDS	Amphibious Flagship Data System (Navy)
AFSC	Air Force Systems Command
AFU	assault fire unit (IHAWK, USMC)
AFU	fixed-wing aircraft airborne unit (PLRS)
AGU	auxiliary ground unit (PLRS)
AHRS	Altitude and Heading Reference Set
AIF	amphibious intelligence file
AIM	ASAS/ENSCE Interface Module (Army)
AIS	automated information system
AJ	anti-jamming
AKDC	automatic key distribution center
ALCC	airlift control center (USAF)
ALCE	airlift control element (Air Force)
ALO	air liaison officer
ALO	advance logistics order
ALS	All-Weather Landing Subsystem (MATCALS)
AM	acquisition manager
AM	amplitude modulation
AMASS	Advanced Marine Airborne SIGINT System
AMETS	Artillery Meterological System (British)
AMS	alternate master station (PLRS)
A/N	alphanumeric

ANGLICO	air naval gunfire liaison company
ANDVT	advance narrowband digital voice terminal
ANMCC	Alternate National Military Command Center
ANSI	American National Standards Institute
AO	air observer
AOA	amphibious objective area
AOB	air order of battle
AOC	air operations center (Navy)
AOR	area of responsibility
AP	acquisition plan
APO	acquisition project officer
APP	advance procurement plan
APS	acquisition program sponsor
ARM	antiradiation missile
ARMS	Automated Recruit Management System (USMC)
ARQ	automatic repeat-request
ARU	rotary-wing aircraft airborne unit (PLRS)
ARTADS	Army Tactical Data Systems
ARTBASS	Army Training Battle Simulation System
ARTY	artillery
ARS	Aerial Reconnaissance and Surveillance (Army system)
ASAC	All Source Analysis Center (Army)
ASARC	Army Systems Acquisition Review Council
ASAS	All Source Analysis System (Army)
ASC	automated services center
ASCII	American Standard Code for Information Interchange
ASD	Aeronautical Systems Division of Air Force Systems Command
ASH	Advance Scout Helicopter
ASIP	All-Source Imagery Processor, Now JSIP, q.v.
ASIS	Amphibious Support Information System (Navy)
ASIT	adaptable surface interface terminal (JTIDS)
ASMD	automated situation map display (TWSEAS)
ASN (R&D)	Assistant Secretary of the Navy (Research and Development)
ASOC	air support operation center (USAF)
ASPO	acquisition sponsor project officer
ASR	air surveillance radar (MATCALS)

ASRT	air support radar team (USAF, USMC)
ASTAB	automated status board
ASU	approval for service use
ASW	antisubmarine warfare
ATACC	Advanced Tactical Air Command Center
ATC	air traffic control
ATCS	Air Traffic Control Subsystem (MATCALS)
ATDL	Army Tactical Data Link
ATDS	Airborne Tactical Data System (USN)
ATEX	automated tactical exercise (TWSEAS)
ATF	amphibious task force
ATFES	Army Tactical Frequency Engineering System (Army)
ATHS	Airborne Target Handoff System (Army)
Atila	French artillery command and control system
AU	airborne unit (PLRS)
AUTOCAT	automatic radio retransmission unit
AUTODIN	Automatic Digital Network
AUTOSEVOCOM	Automatic Secure Voice Communications
AUTOVON	Automatic Voice Network
AVTB	Amphibious Vehicle Test Branch (MCTSSA)
AWACS	Airborne Warning and Control System (Air Force)
AWDTS	Artillery Weapon Data Transmission System (British)
AWS	Amphibious Warfare School
BASS	Battlefield Area Surveillance System
BATES	Battlefield Artillery Target Engagement System (British)
BB	battery box (MIFASS)
BCC	battery control center
BCS	Battery Computer System
BER	bit error rate
BITE	built-in-test equipment
BITS	built-in-test software
BLOS	beyond-line-of-sight
BLT	battalion landing team
BN	battalion
BNRID	basic net radio interface device

BOC	basic operational capability
BOC	Battalion Operations Center (Army)
bps	bits per second
BSSG	brigade service support group
Btry	battery
BTU	Basic Terminal Unit (VACTOR)
BUCS	Backup Computer System
C2	command and control
C2 EXEC	Command and Control Execution Automated System
C3	command, control and communication
C3I	command, control, communications, and intelligence
C4	command, control, communication and computers
CAEMS	Computer-Aided Embarkation Management System
CAFMS	Computer Assisted Force Management System (Air Force)
CALMS	Computer-Aided Load Manifesting System (Air Force)
CARDR	punched card reader (ASIS)
CAS	close air support
CASTMS	Combat Air Support Traffic Management System (Army)
CATF	commander, amphibious task force
CAU	communications access unit (MIFASS, TCO)
C2E	Command and Control Element
CCF	communication collection facility
C2MP	Command and Control Master Plan
CCO	Communications Collection Outstation (ISIS)
CCP	communications control panel (MIFASS, TCO)
CCS	Communications Control System (IDASC)
CCS	Communications Control System (AFATDS)
CCS	Command and Control Set (PATRIOT)
CCS	Control and Communications Subsystem (MATCALS)
CCSC	Combat Cryptologic Support Console (Navy)
CCTV	closed circuit television
CD	contract definition
CDA	casualty and damage assessments
CDPA	Consolidated Data Processing Activity
CDR	critical design review

CDRL	contract data requirements list
CDS	Combat Direction System (Navy)
CDSA	Concepts, Doctrine, and Studies Activity (MCDEC)
CDU	control and display unit (GPS)
CE	communications-electronics
CEO	communication-electronics officer
CEP	circular error probable
CFAO	Consolidated Fiscal and Accounting Office
CG	commanding general
CGTSS	Commanding Group Training Support System (Army)
CHNAVMAT	Chief of Naval Material
C&I	compatibility and interoperability
CIC	combat information center (Navy)
CIC	combat intelligence center (Air Force)
CICWG	Commonality and Interface Control Working Group
CINC	commander-in-chief
CINCLANT	Commander in Chief, Atlantic Command
CIS	Combat Identification System
CIS-ISS	CIS-Indirect Subsystem
CIT	counter intelligence team
CIU	communications interface unit (TAOM)
CLF	commander landing force
CM	configuration management
CM	COMSEC module
CM	console modules
CM	countermeasure
CMC	Commandant of the Marine Corps
CMCSS	Navy Cruise Missile Combat Support System
cmd	command
CMP	configuration management plan
CMP	communication message processor
CMTU	cartridge magnetic tape unit
CNA	Center for Naval Analyses
CNCE	communications nodal control element
CND	Chief of Naval Development
CNI	communication, navigation and identification

CNO	Chief of Naval Operations
CNR	combat net radio (Army-MSE)
COC	combat operations center
COEA	cost and operational effectiveness analysis
COMINT	communication intelligence
comm	communications
COMMCEN	communications center
COMMO	communication officer
COMMCON	communication control
COMNAVMAT	Commander, Naval Material Command
COMSEC	communication security
CONUS	continental United States
COU	cable orderwire unit
CP	command post
CPE	Conventional Planning and Execution (WWMCCS)
CPFF	cost plus fixed fee
CPI	communications processor interface (ASAS module)
CPIF	cost plus incentive fee
CPU	central processing unit
CPX	command post exercise
CRC	control and reporting center (Air Force)
CRC	command reporting center (NATO)
CRITICOMM	Critical Communications
CRP	control and reporting post (Air Force)
CRT	cathode ray tube
CRTT	cathode ray tube typewriter
CRU	command response unit (PLRS)
crypto	cryptographic
CSC	Command and Staff College
CSCE	communication system control element
CSS	computer support shelter (TERPE-MAGIS)
CSS	combat service support
CSSE	combat service support element
CSSG	combat service support group
CSSIN	Combat Service Support Information Network
CS^3	Combat Service Support System (Army)

CTP	coordinated test plan
CU	computer unit (TAOM)
CUDIXS	Common User Digital Information Exchange System
CVA	attack aircraft carrier
CVSD	continuously variable slope delta
CW	continuous wave
CWAR	continuous wave acquisition radar
CWC	composite warfare commander
CY	calendar year
D-A	digital-to-analog
DAMA	demand assigned multiple access
DAR	Defense Acquisition Regulations (formerly ASPER)
DARCOM	Development and Readiness Command (Army)
DARPA	Defense Advance Research Projects Agency
DAS	direct air support
DASC	direct air support center (USMC)
DB	developmental bulletin
DBMS	data base management system
DC	development coordinator
dc	direct current
DCA	Defense Communications Agency
DCC	display control console (PLRS)
DCE	data circuit-terminating equipment
DC/S	deputy chief of staff
DCS	Defense Communications System
DC/SR	display control/storage and retrieval (Air Force TIPI segment)
DCT	digital communications terminal (USMC)
DCU	digital communication unit (TAOM)
DDB	digital data buss
DDD	direct distance dialing
DDL	digital data link
DDN	Defense Data Network
DED	data element dictionary
DF	direction finding
DFASC	Deployable Force Automated Services Center

DGM	digital group multiplex
DIA	Defense Intelligence Agency
DIAM	Defense Intelligence Agency Manual
DIV	division
DLED	dedicated loop encryption device
DMD	digital message device (Army)
DME	distance measuring equipment (MRAALS)
DMED	digital message entry device (TWSEAS)
DMS	data management system
DMSS	Depot Maintenance Subsystem (MIMMS)
DNSARC	Department of the Navy Systems Acquisition Review Council
DNVT	digital nonsecure voice terminal
DO	disbursing office
DOD	Department of Defense
DON	Department of the Navy
DP	development proposal
DPM	data processing module (AN/TSQ-91)
DPO	development project officer
DRD	detailed requirements document
DSARC	Defense Systems Acquisition Review Council
DSCS	Defense Satellite Communication System
D/S	direct support
DSD	dynamic situation display (MIFASS)
DSN	Defense Switched Network
DSSCS	Defense Special Security Communications System
DSTV	direct support team vehicle (PLRS)
DSU	direct support unit (detachment radio battalion)
DSVT	digital subscriber voice terminal
DT	developmental test
DTE	data terminal equipment
DT&E	developmental test and evaluation
DTG	digital trunk group
DTMF	dual tone multifrequency
DTP	detailed test plan
DWTS	digital wideband transmission system

EAC	echelons above corps (Army)
EAF	expeditionary airfield
EAM	electrical accounting machine
ECCM	electronic counter-countermeasures
ECM	electronic countermeasures
ECP	engineering change proposal
ECU	environmental control unit
ED	engineering development
ED	exploratory development
EDAC	error detection and correction
EDM	engineering developmental model
EDP	electronic data processing
EES	Electronic Intelligence Support System (Radio Bn)
EHF	extremely high frequency
ELINT	electronic intelligence
ELOS	extended line-of-sight
EMCON	emission control (procedures)
EMI	electromagnetic interference
EMP	electromagnetic pulse
EMSEC	emission security
ENSCE	enemy situation correlation element (Element of ASAS)
ENSIT	enemy situation
EO	electro-optical
EOB	electronic order of battle
EP	electronic printer (AFATDS)
EPLRS	Enhanced Position Location Reporting System (Army)
EPUU	EPLRS User Unit
ERADCOM	Electronics Research and Development Command (Army)
ERO	equipment repair order
ESAMS	Evolutionary Surface-to-Air Missile System (Army)
ESM	electronic warfare support measures
ESS	Electronic Intelligence (ELINT) Support System
ETAS	Elevated Target Acquisition System (Army)
EUCE	End Use Computing Equipment
EW	electronic warfare
EW/IOC	electronic warfare/intelligence operations center

EWPD	early warning pointing device
EXOS	Executive Operating System (ITAWDS)
FAAD	forward area air defense, now LAAD, q.v.
FAAWC	force anti-air warfare commander
FAC	forward air controller
FAC(A)	forward air controller (airborne)
FACE	Field Artillery Computer Equipment (British)
FACP	forward air control post (Air Force)
FADAC	Field Artillery Digital Automatic Computer
FAMDS	Field Artillery Meteorological Data System
FARS	Field Artillery Rocket System
FASC	fire and air support center
FASC	force automated services center
FATADS	Field Artillery Tactical Data System (Army)
FAX	facsimile equipment
F/C	flag command (USN)
FCC	fleet command center (USN)
FDC	fire direction center
FDDS	Flag Data Display System (USN)
FDTE	Force Development Tests Evaluation
FDX	full-duplex
FEC	forward error correction
FED	forward entry device (AFATDS)
FIC	Fleet Intelligence Center (USN)
FLCC	force logistic coordination center
FLOT	forward line of troops
FLSG	force logistic support group
FLTCINC	Fleet Commander-In-Chief
FLTSATCOM	Fleet Satellite Communications (satellite system)
FM	frequency modulation
FMC	field maneuver controller (TWSEAS)
FMF	Fleet Marine Force
FMFLANT	FMF Atlantic
FMFM	Fleet Marine Force Manual
FMFPAC	FMF Pacific

FMSS	Field Maintenance Subsystem (MIMMS)
FO	forward observer
FOA	fiber optic applique
FOC	full operational capability
FOCA	fiber optic cable assembly
FOC/FCC	flight operations center/flight coordination center (Army)
FOCS	Fiber Optic Communications System
FOIP	fiber optic interface panel (TAOC-85)
FORSTAT	Force Status and Identity Report (USMC)
FOS	functional operational specification
FOT&E	follow-on operational test and evaluation
FPF	final protective fires
FPT	full period termination
FREDS	Flight Readiness Evaluation Data System (USMC)
FRG	Federal Republic of Germany
FS	fire support
FSB	Fleet Satellite Broadcast System
FSC	fire support coordinator
FSCC	fire support coordination center (USMC)
FSCU	fire support computer unit (AFATDS)
FSD	full-scale development
FSE	fire support element (Army)
FSED	full-scale engineering development
FSG	fire support group
FSIC	forward sensor interface and control (module) (ENSCE)
FSK	frequency shift keying
FSSG	force service support group (USMC)
FST	fire support terminal (AFATDS)
FU	fire unit
FY	fiscal year
FYDP	Five-Year Defense Program
GAMO	Ground and Amphibious Military Operations (Program)
GCA	ground controlled approach
GCE	ground combat element
GCI	ground controlled intercept

GDBS	Ground Directed Bombing System (AN/TPB-1D)
GEADGE	German Air Defense Ground Environment System
GFE	government-furnished equipment
GHz	gigahertz
GLLD	ground-based laser locator designator
GMF	Ground Mobile Forces (Joint satellite system)
GOR	general operational requirement
GPS	Global Positioning System
G/S	general support
GSE	ground sensor element
GSE	ground support equipment
HAC	Hughes Aircraft Company
HAFB	Hanscom Air Force Bases, Massachusetts
HAWK	HAWK Missile System
HC(A)	helicopter coordinator (Airborne)
HDC	helicopter direction center (Navy)
HDX	half-duplex
HEROS	German C^2 System
HF	high frequency
HFCT	High Frequency Communication Terminal
HFEP	host front end processor
HHS	headquarters and headquarters squadron
HIMAD-C3	High-to-Medium Altitude Air Defense Command Control and Communications System (Army)
HLSC	helicopter logistic support center
HMSS	Headquarters Maintenance Subsystem (MIMMS)
HOL	high order language
HQMC	Headquarters, U.S. Marine Corps
HQMCORGMAN	Headquarters Marine Corps Organization Manual
HQO	Headquarters Order (HQMC)
HSP	high speed printer
HST	helicopter support team
HWLS	hostile weapons location system
Hz	hertz
IA	Imagery Augmentation shelter, (MAGIIC) (Army)

IAC	Intelligence Analysis Center (MAGIS)
IAS	Integrated AUTODIN System
IA/SR	intelligence analysis/storage and retrieval
IC	intelligence center
ICAO	International Civic Aviation Organization
ICC	Information Coordination Central (Patriot, Hawk)
ICCS	Integrated Communications Collection System (now ISIS)
ICNI	integrated communications, navigation, identification
ICNIA	Integrated Communications, Navigation, Identification, Avionics (Program)
ICS	intercommunication system
IDA	Integrated Disbursing and Accounting System (USN)
IDASC	Improved Direct Air Support Center
IDB	Interoperability Data Base (Marine Corps)
IDP	intelligence data processing (ASAS module)
IDS	interface design specification
IEP	independent evaluation plan
I/EW	intelligence/electronic warfare
IFF	identification friend or foe
IHFR	Improved High Frequency Radio (Army)
II	Imagery Interpretation Facility (MAGIS)
IIDS	interagency interface design specification
I2O	interoperability and intraoperability
IIOB	Inter-Intraoperability Branch (MCTSSA)
I&L	Installations and Logistics (Department, HQMC)
ILS	integrated logistic support
ILS	instrument landing system
ILSMP	integrated logistics support management plan
ILSP	integrated logistic support plan
IMA	intermediate maintenance activity
IMC	integrated maneuver controller (TWSEAS)
IMC	instrument meteorological condition (MATCALS)
IMMD	interim multi-mode display
IMP	Interoperability Management Plan (Marine Corps)
INF	infantry
INTACS	Integrated Tactical Communication System (Army)

INTEL	intelligence
I/O	input/output
IOB	Interoperability Branch (MCDEC)
IOC	initial operational capability
IOT&E	initial operational test and evaluation
IP	interface processor
IP	Imagery Processing Segment of MAGIS
IPR	in-progress review
IPRC	In-Progress Review Committee
IR	infra-red; information resource
IRU	internal radio unit (TAOC-85)
I-S/A AMPE	Inter-Service/Agency Automated Message Processing Exchange
ISDN	integrated services digital network
ISIS	Integrated Signals Intelligence System
ISMO	information systems management office
ISO	International Organization for Standardization
ITT	interrogator translator team
ITAWDS	Integrated Tactical Amphibious Warfare Data System (Navy)
I-TEP	Interim Tactical ELINT Processor (Army)
ITF	interim test facility (MCTSSA)
IVSN	Initial Voice Switched Network (NATO-NICS)
IXS	Information Exchange System (Navy)
JAMS	JINTACCS Automated Message System
JANAP	Joint Army, Navy, Air Force Publication
JCS	Joint Chiefs of Staff
JCSE	Joint Communications Support Element
JDT	joint developmental test
JIC	joint intelligence center
JIIP	Joint Interface Implementation Plan
JILSP	joint integrated logistic support plan
JINTACCS	Joint Interoperability of Tactical Command and Control Systems
JITF	Joint Interface Test Force (JINTACCS)
JM	JTIDS module
JOPES	Joint Operation Planning and Execution System (WWMCCS)
JOPS	Joint Operations Planning System

JOR	joint operational requirement
JOT	joint operational test
JOT&E	joint operational test and evaluation
JPO	joint program office
JR	jam resistant
JSG/TCCCS	Joint Standardization Group/Tactical Command, Control, and Communications Systems
JSIP	Joint-Source Imagery Processor, formerly ASIP, q.v.
JSNS	justification for system new start
JSOP	Joint Strategic Objectives Plan
JSOR	joint services operational requirement
JTAO	Joint Tactical Air Operations (formerly Joint TACS/TADS Interface Program)
JTB	Joint Transportation Board (Joint OPFAC)
JTC3A	Joint Tactical Command, Control, and Communications Agency
JTCO	Joint Tactical Communications Office
JTE	Joint Test Element (JTCO)
JTF	joint task force
JTFP	Joint Tactical Fusion Program
JTIC	JTIDS Technical Interface Concept
JTIDP	JTIDS Technical Interface Design Plan
JTIDS	Joint Tactical Information Distribution System
JU	JTIDS unit
JUMPS	Joint Uniform Military Pay System
KDT	keyboard display terminal
kbps	kilobits per second
KHz	kilohertz
km	kilometer
KOPS	thousands of operations per second
KSR	keyboard send-receive
KVG	key variable generator
kW	kilowatt
LAAD	low altitude air defense, formerly FAAD, q.v.
LAAM	light anti-aircraft missile

LAN	local area network
LAP	letter of adoption and procurement
LAV	light armored vehicle
LCAC	landing craft air cushion
LCC	amphibious command ship
LCC	life cycle cost
LDMX	local digital message exchange
LDNS	Lightweight Doppler Navigation System (Army)
LDRM	laser designator range finder module (MULE)
LEASAT	leased satellite communications
LED	light emitting diode
LEN	Large Extension Node Switch (Army-MSE)
LF	landing force
LFC	landing force commander
LFICS	Landing Force Integrated Communications System
LFM	landing force manual
LFOC	landing force operations center
LFORM	landing force material
LFTARS	Landing Force Transmit and Receive Subsystem
LFTC	Landing Force Training Command
LGM	loop-group multiplex
LHA	amphibious assault ship (general purpose)
LHD	amphibious assault ship (multi purpose)
LKG	loop key generator
LNO	liaison officer
LOA	letter of agreement
LOB	line of bearing
LOGMARS	logistics marking symbology (bar code)
LORAN	Long Range Navigation System
LOS	line-of-sight
LP	line printer
LPC	linear predictive coding
LPD(F)	amphibious transport, dock (flag configured)
LPH	amphibious assault ship (helicopter)
LPI	low probability of intercept
LRI	lowest replaceable item

LRU	lowest replaceable unit
LSA	logistic support analysis
LSA	logistic support area
LSCDM	low-speed cable driver modem
LSB	lower sideband
LSD	large screen display
LSG	logistic support group
LSI	large scale integration
LSU	logistic support unit
LTD	laser target designator
LVT	landing vehicle tracked
LZCT	landing zone control team
MAB	Marine amphibious brigade
MACCS	Marine Air Command and Control System
MACCS-85	Marine Air Command and Control System - 1985 (now TAOM)
MACG	Marine air control group
MACS	Marine air control squadron
MACTDS	Marine Automated Cargo throughput Documentation System
MAF	Marine amphibious force
MAG	Marine aircraft group
MAGFARS	Marine Air/Ground Financial Accounting and Reporting System
MAGIIC	Mobile Army Ground Imagery Interpretation Center
MAGIS	Marine Air-Ground Intelligence System
MAGTF	Marine air-ground task force
MANTA	MACCS NATO tactical application
MARRES	Manual Radar Reconnaissance Exploitation System (Air Force: TIPI)
MARS	Military Affiliate Radio System
MARWIS	Marine Corps WWMCCS Information System
MASC	MAGTF Automated Service Center
MASS	Marine air support squadron
MATCALS	Marine Air Traffic Control and Landing System
MATCS	Marine air traffic control squadron
MAU	Marine amphibious unit
MAW	Marine aircraft wing

MBDL	Missile Battery Data Link
MC	microcomputer
MCAGCTC	Marine Corps Air-Ground Combat Training Center
MCAS	Marine Corps air station
MCB	Marine Corp base
MCCC	Marine Corps Command Center
MCCDPA	Marine Corps Central Design and Programming Activity
MCCES	Marine Corps Communications-Electronics School
MCCISWG	Military Command, Control, and Information Systems Working Group (NATO)
MCCRES	Marine Corps Combat Readiness Evaluation System
MCDEC	Marine Corps Development and Education Command
MCDN	Marine Corps Data Network
MCE	modular control element (Air Force)
MCFC	Marine Corps Finance Center
MCICMP	Marine Corps Interoperability Configuration Management Plan
MCLB	Marine Corps Logistics Base
MCM	memory control module
MCO	Marine Corps Order
MCOAG	Marine Corps Operations Analysis Group
MCOTEA	Marine Corps Operational Test and Evaluation Activity
MCPDM	Marine Corps program decision meeting
MCPR	Marine Corps Procurement Request
MCPR	Multichannel Command Post Radio (Army)
MCS	Maneuver Control System (Army)
MCSF	Mobile Cryptologic Support Facility
MCSS	multichannel switched system
MCTSSA	Marine Corps Tactical Systems Support Activity
MDF	main distribution frame
MDS	Meteorological Data System
MDSS	Maritime Prepositioning Ships Decision Support System
MDT	multichannel data terminal
MED	message element dictionary
medevac	medical evacuation
MEDS	Mechanized Embarkation Data System
MEG	message entry generator

MEO	message exchange occurrence
MEPGS	mobile electric power generating source
MEPS	Message Editing and Processing System
MEPS	mobile electric power source
MEPS	Message Entry Processing System
MEWSS	Mobile Electronic Warfare Support System
MFOMS	Marine Corps Fiber Optic Multiplex System
MGRS	Military Grid Reference System
MGT	mobile ground terminal (AMASS)
MGU	map generation unit (DCT)
MHz	megahertz
MICOM	Missile Command (Army)
MIFASS	Marine Integrated Fire and Air Support System
MIJI	meaconing, intrusion, jamming, and interference
MILSTAR	Military Strategic, Tactical, and Relay satellite communications system
MIMMS	Marine Integrated Maintenance Management System
MIP	material issue point
MIPR	military interdepartmental procurement request
MIS	Management Information System (ITAWDS)
M&L	Mobility and Logistics (Div. of Development Center)
MLRP	Marine Corps Long-Range Plan
MLRS	Multiple Launch Rocket System
MLS	Microwave Landing System (National)
MM	mass memory
MMC	map maneuver controller (TWSEAS)
MMD	multi-mode display (MATCALS)
MML	mass memory loader (TAOM)
3M	Maintenance and Material Management (System)
MMR	multi-mode receiver (MRAALS)
MMROP	Marine Corps Mid-Range Objectives Plan
MMS	Manpower Management System
MMU	mass memory unit (TAOM)
MOA	memorandum of agreement
MOE	measure of effectiveness
MOS	military occupational specialty

MOU	memorandum of understanding
MPC	message processing center (USAF--AN/TYC-10)
MPIC	MIFASS-PLRS Interface Controller
MPL	military pay list
MPMC	military personnel, Marine Corps (appropriation)
MPOC	manpower point of contact
MPS	maritime prepositioning ships
MPU	manpack unit (PLRS)
MPV	military pay voucher
MRAALS	Marine Remote Area Approach and Landing System
MRC	AN/UYK-44(V) Militarized Reconfigurable Computer
MRP	AN/UYK-44(V) Militarized Reconfigurable Processor
MRTT	Modular Record Traffic Terminal
MS	master station (PLRS)
MSC	Military Sealift Command
M3S	Marine Corps Standard Supply System
MSAMS	Mobile Surface-To-Air Missile System
MSARC	Marine Corps Systems Acquisition Review Council (Now MCPDM qv.)
MSD	mass storage device (MIFASS, TCO)
MSE	mobile subscriber equipment
MSSG	MAU service support group
MTACC	Marine Corps tactical command and control
MTACCS	Marine Corps Tactical Command and Control Systems
MTBF	mean time between failures
MTCC	Modular Tactical Communications Center
MTD	magnetic tape drive
MTDS	Marine Corps Tactical Data System
MTF	message text format
MTS	Marine tactical systems
MTTR	mean time to repair
MTU	magnetic tape unit
MU	master unit (PLRS), now master station (MS)
MULE	Modular Universal Laser Equipment
MUMMS	Marine Unified Material Management System
MUTE	Multiplexed Unit for Transmission Elimination (Navy)
MVR	maneuver

NACISA	NATO Communications and Information Systems Agency
NADC	Naval Air Development Center
NADGE	NATO Air Defense Ground Environment
NAEC	Naval Air Engineering Center
NAK	non-acknowledge
NALCOMIS	Navy Aviation Logistic Command Management Information System
NATO	North Atlantic Treaty Organization
NAVAID	navigation aid
NAVAIR	Naval Air Systems Command
NAVCAMS	Naval Communications Area Master Station
NAVCOMP	Navy Comptroller
NAVCOMPARS	Naval Communications Processing and Routing System
NAVCOMMSTA	Naval communications station
NAVCON	navigation and control (Army)
NAVELEX	Naval Electronics Systems Command (now SPAWAR qv)
NAVFLIRS	Naval Flight Record Subsystem
NAVMACS	Navy Modular Automated Communication System
NAVMAT	Naval Materiel Command (also NMC)
NAVSEA	Naval Sea Systems Command
NAVSTAR	Navigation System Using Timing and Ranging
NBC	nuclear, biological, and chemical
NC	Node Central Switch (Army-MSE)
NCA	National Command Authority
NCCIS	NATO Command, Control, and Information System
NCCS	Navy Command and Control System
NCM	net control master
NC3A	Naval Command, Control and Communications Architecture
NCS	Naval communications station
NCCS	Naval Command and Control Systems
NCO	non-commissioned officer
NCU	net control unit
NEACP	National Emergency Airborne Command Post
NELC	Naval Electronics Laboratory Center (now NOSC)
NESEC	Naval Electronic Systems Engineering Center
NESP	Navy EHF SATCOM Program
NET	new equipment training

NFM	north finding module (MULE)
NGF	naval gunfire
NGLO	naval gunfire liaison officer
NGO	naval gunfire officer
NGST	naval gunfire spot team
NICS	NATO Integrated Communications System
NIPS	Naval Intelligence Processing System
NIPSTRAFAC	Naval Intelligence Processing System Training Facility
NMC	Naval Material Command
NMCC	National Military Command Center
NMCS	National Military Command System
NOSC	Naval Ocean Systems Center
NPD	Naval Procurement Directive
NPE	Nuclear Planning and Execution System (WWMCCS)
NPRDC	Naval Personnel Research and Development Center
NPT	nonprogrammable terminal
NRI	Net Radio Interface (Army-MSE)
NRIU	net radio interface unit
NRL	Naval Research Laboratory
NRZ	nonreturn-to-zero
NS	night sight (MULE)
NSA	National Security Agency
NSFS	naval surface fire support
NSWC	Naval Surface Weapons Center
NSWL	Naval Surface Weapons Laboratory
NTCOC	Naval Telecommunications Command Operations Center
NTDS	Naval Tactical Data System
NTRIDS	Netted Tactical Radio Interface Distribution System
NTS	Naval Telecommunications System
NTSC	Naval Training Systems Center
NWC	Naval Weapons Center
NWP	Naval Warfare Publication
OCAC	operations control and analysis center (Radio Bn)
OCR	optical character reader
OCR	optical character recognition

OCU	operator console unit (TAOM)
ODDR&E	Office of Director, Defense Research and Engineering
ODIN	Norwegian command and control system
OJT	on-the-job-training
OLMAN	On-Line Manpower System
O&M	operations and maintenance (budget category)
OM	operations module (TAOM)
OMA	organizational maintenance activity
OMB	Office of Management and Budget
OMNI/ADF	OMNI/Automatic direction finder
ONR	Office of Naval Research
OPEVAL	operational evaluation
OPFAC	operational facility
OPSCOMM	operations communications
OPSEC	operations security
OPTEVFOR	Operational Test and Evaluation Force (Navy)
ORESTES	Teletypewriter Subsystem of Navy UHF SATCOM System
ORF	operational readiness float
OS	operating system
OSC	operational systems control
OSCC	operational system control center
OSI	Open Systems Interconnection (NATO-NICS)
OSM	Operator Support Module (ISIS)
OT	operational test
OTC	officer in tactical command
OTCIXS	Officer-in-Tactical-Command Information Exchange System
OT&E	operational test and evaluation
OTEA	Operational Test and Evaluation Activity (Army)
OTM	operator terminal module
OTP	outline test plan (now test planning document (TPD))
OTPO	operational test project officer
OWS	operator work stations (IDASC)
PADS	Position and Azimuth Determining System
PAR	precision approach radar (MATCALS)
PAT&E	production acceptance testing and evaluation

PC	personal computer
PCB	printed circuit board
PCDP	pilot control display panel (PLRS)
PCG	power converter group (AFATDS)
PCM	pulse code modulation
PCP	platoon command post (HAWK, LAAM Bn)
PCS	primary control ship
PCSB	pulse code scanning beam (MRAALS)
PDA	principal development activity
PDCU	power distribution and control unit (TAOM)
PDS	program design specification
PED	program entry device
PERSCO	personnel support for contingency operations (Air Force)
PHOTINT	photographic intelligence
P3I	preplanned product improvement
PIDS	preliminary interface design specifications
PILSP	preliminary integrated logistic support plan
PIP	product improvement program
PIWG	Permanent Interoperability Working Group (NATO)
PJH	PLRS-JTIDS Hybrid. Now Army Data Distribution System (ADDS)
PLI	position location information
PLIM	position location information message
PLIP	position location information processor
PLRS	Position Location Reporting System
PLU	program load unit (AFATDS)
PM	program manager
PM	power module (MIFASS)
PME	program material element
PMR	Pacific Missile Range
PMTC	Pacific Missile Test Center
POES	Pay Option Election System (USMC)
POM	Program Objectives Memorandum
POS/NAV	position/navigation
PPBS	Planning, Programming, and Budgeting System
PPI	plan position indicator
PPO	Plans, Policy & Operations (Division, HQMC)

PPS	program performance specifications
PRE-PAS	Precise Personnel Assignment System (USMC)
PRIME	Priority Management Effort (USMC)
PROPHET	Program for a High Frequency Radio Propagation Assessment System/Propagation Forecasting System
PRU	printer unit (TAOM)
PSDD	preliminary system description document
PSN	packet switching node
PT	programmable terminal
PTA	proposed technical approach
PTL	project team leader (MCTSSA)
PTP	paper tape punch
PTR/P	paper tape reader/punch
PTU	participating test unit (JINTACCS)
PTU	paper tape unit
QDR	quality deficiency report
QQPRI	qualitative and quantitative personnel requirements information
RAM	reliability, availability, and maintainability
RAM	random access memory
RAN	request for authority to negotiate
RASC	regional automated services center
RAU	Radio Access Unit (Army-MSE)
RBDS	Radar Bomb Directing Set
RCDC	Radar Course Directing Central
RCU	Remote Control Unit (VACTOR)
R&D	research and development
RDF	radio direction finding
RDG	Radar Display Group (ITAWDS)
RDOPP	research and development obligation phasing plan
RD&S	research, development and studies
RDT&E	research, development, test and evaluation
REAL FAMMIS	Real-Time Finance and Manpower Management Information System
REDDT	remote entry data display terminal
Regt	Regiment

REMMPS	Reserve Manpower Management and Pay System (USMC)
RF	radio frequency
RFI	radio frequency interference
RFLSI	radio frequency large scale integration
RFP	request for proposal
RIOS	remote input/output station
RIP	retail issue point
RIU	radar interface unit (TAOC-85)
RLGM	remote loop group multiplexer
RLT	regimental landing team
RMC	remote multiplexer-combiner
ROC	required operational capability
ROM	read only memory
ROR	range-only radar
RPPS	Retired Personnel Pay System (USMC)
RPV	remotely piloted vehicle
R/RU	recorder/reproducer unit (TAOM)
R/T	receiver/transmitter
RUM	Resource and Unit Monitoring (WWMCCS)
RWU	rotary wing unit (PLRS)
SAAS	Stand Alone Analysis Subsystem (ISIS)
SAAWC	sector anti-air warfare coordinator (center)
SABRS	Standard Accounting, Budget, and Reporting System
SACC	supporting arms coordination center (Navy)
SACRA	French C^2 system
SAGAT	Italian artillery command and control system
SAM	surface-to-air missile
SAR	search and rescue
SAS	Single Audio System (Navy)
SASSY	Supported Activities Supply System (USMC)
SATCOM	satellite communications
SC	single channel
SCAMP	sensor control and management platoon
SCARS	Status Control and Alert Reporting System (NATO-NICS)
SCC	system control center (Army-MSE)

SCD	system concept description
SCG	support carrier group
SCOTT	Single Channel Objective Tactical Terminal
SCI	sensitive compartmented intelligence
SCP	Secure Conferencing Project
SCR	single channel radio
SDA	source data automation
SDD	system description document
SDF	software development facility
SDLC	Synchronous Data Link Control (link protocol)
SDM	special data mode (PLRS)
SDNRIU	secure digital net radio interface unit
SEAOPS	Southeast Asia Operations
SEM	standard electronic module
SEMS	Standard Embarkation Management System
SEN	Small Extension Node Switch (Army-MSE)
SEP	spherical error probable
S/EWCC	signals intelligence/electronic warfare coordination center
SFCP	shore fire control party
SHF	super high frequency
SHORAD C2	Short Range Air Defense-Command and Control System (Army)
SI	special intelligence
SIF	selective identification feature
SIGINT	signals intelligence
SIGSEC	signal security
SINCGARS	Signal Channel Ground and Airborne Radio System
SIO	signals intelligence officer
SIS	Special Information System (National Security Agency)
SLAR	side-looking airborne radar
SLPA	Survivable Low Profile Antenna (Army)
SMIC	Shipboard MTACCS Interface Controller
SMU	Sassy Management Unit
SNA	system network architecture
SNAP	Steerable Null Antenna Processor
SNASS	Standard Naval Aviation Supply System
SOC	sector operations center

SOD	systems operations design
SOJ	standoff jamming
SOP	standing operating procedures
SOR	specific operational requirement
SOW	statement of work
SP	shore party
SPAWAR	Space and Naval Warfare Systems Command (Formerly NAVELEX)
SPE	system planning and engineering
SPINTCOMM	Special Intelligence Communications
SPO	system program office
SPOTREP	spot report
SRI	Stanford Research Institute
SS	support shelter (MAGIS-TERPES)
SSB	single sideband
SSC	supply support center
SSCC	special security communication center
SSCT	special security communications team
SSES	ship's signals exploitation space (Navy)
S/SLCC	ship-to-shore logistics coordination center
SSIXS	Submarine Satellite Information Exchange Subsystem
SSO	special security office
SST	single subscriber terminal
STAJ	Short Term Anti-Jam (program)
STANAG	standardization agreement (NATO)
STE	support and test equipment
STED	SEELEY trunk encryption device (KG-93)
STM	service test model
STO	science and technology objective
STTM	stabilized tracking tripod module (MULE)
SUADPS	Shipboard Uniform Automated Data Processing System
SUADPS-RT	Shipboard Uniform Automated Data Processing System - Real Time
SUPPLOT	supplementary plot
SUNS	Small Unit Navigation System
SURC	Syracuse University Research Corporation
SUPPLOT	supplementary plot
SVIP	Secure Voice Improvement Program

SVM	system validation model
SVS	Secure Voice System
SYSCON	system control
SVU	surface vehicle unit (PLRS)
TAC	tactical air commander
TAC(A)	tactical air coordinator (airborne)
TACAIR	Tactical air forces
TACAN	Tactical Air Navigation System
TACC	tactical air command center (Marine Corps)
TACC	tactical air control center (Navy and Air Force)
TACCDAS	Tactical Command and Control System (Canadian)
TACC/INTEL	tactical air control center/intelligence (AF)
TACCS	Tactical Army CSS Computer System
TACEX	tactical exercise
TACFIRE	Tactical Fire Direction System (Army)
TACINTEL	Tactical Intelligence Subsystem of Navy UHF SATCOM System
TACLOG	tactical logistical, tactical logistical (group or center)
TACMS	Tactical Missile System (Army)
TACP	tactical air control party
TACRON	tactical air control squadron (Navy)
TACS	Tactical Air Control System (Air Force)
TACSATCOM	Tactical Satellite Communications
TACSIIP	Tactical Systems Interoperability/Intraoperability Program
TACS/TADS	Tactical Air Control System/Tactical Air Defense Systems (Joint Interface Program) (Now JTAO, q.v.)
TACT	target acquisition and control team
TACTERM	tactical terminal (ANDVT)
TADC	tactical air direction center
TADIL	tactical digital information link
TADIXS	Tactical Data Information Exchange System
TAFHQ	Tactical Air Force Headquarters
TAIS	Tactical Air Intelligence System
TAO	tactical air observer
TAO	tactical air operations

TAOC	tactical air operations center, may also be used for tactical air operations central
TAOC-85	Tactical Air Operations Central - 1985 (USMC) (Now TAOM, q.v.)
TAOM	Tactical Air Operations Module (formerly TAOC-85, q.v.)
TAOR	tactical area of responsibility
TAR	tactical air request
TARE	Telegraph Automatic Relay Equipment (NATO-NICS)
TASE	tactical air support element
TBD	to be determined
TCAC	Technical Control and Analysis Center, AN/TSQ-130
TCATA	TRADOC Combined Arms Test Activity (Army)
TCC	tactical communication center
TC^2	tactical command and control
TCCF	tactical communication control facility
TCO	Tactical Combat Operations System (USMC)
TCP	Tactical Computer Processor (Army)
TCS	Tactical Computer System (Army)
TCT	Tactical Computer Terminal (Army)
TCU	tactical COMSEC unit
TD	track descriptor (message)
TDCC	Tactical Data Communications Central
TDE	time distribution equipment
TDF	tactical digital facsimile
TDM	time division multiplexed
TDMA	time-division multiple-access
TDP	technical development plan
TDP	tactical data processing
TDS	tactical data system
T&E	test and evaluation
T/E	table of equipment
TEB	technical evaluation board
TEC	tactical electronic intelligence (ELINT) correlator (TIPI)
TEC	tactical exercise controller
TECC	tactical exercise control center
TECG	tactical exercise control group
TECHCON	technical control

TECHEVAL	technical evaluation
TED	trunk encryption device
TEMP	test and evaluation master plan
TEP	Tactical ELINT Processor (Air Force)
TESS	Tactical Environmental Support System (Navy)
TERPES	Tactical Electronic Reconnaissance Processing and Evaluation System (segment of MAGIS)
TESE	Tactical Exercise Simulator and Evaluator (now TWSEAS)
TF	task force
TFCC	tactical flag command center (Navy)
TFMS	Tactical Frequency Management System
TG	task group
TGM	trunk-group multiplex
TIC	technical interface concepts
TICMS	TWSEAS Input/Output Controller Microcomputer System
TIDP	technical interface design plan
TIDP-TE	TIDP test edition
TIMS	Tactical Intelligence Management System
TIPI	Tactical Information Processing and Interpretation System (Air Force)
TIPS	Tactical Information Processing System (ITAWDS)
TISIF	Tactical Information Systems Integration Facility
TM	technical manual
T/O	table of organization
TOA	time of arrival
TOC	tactical operations center (Army)
TOD	time of day
TOR	tentative operational requirement (Navy)
TP	transcriber position
T1P	Type One Printer (MIFASS)
T2P	Type Two Printer (MIFASS)
TPD	test planning document
TPDF	team portable direction finder
TRADOC	Training and Doctrine Command (Army)
TRANSEC	transmission security
TRE	tactical receive equipment of Navy UHF SATCOM System

TRI-TAC	Joint Tactical Communications Program
TRO	training review officer
TRSS	Tactical Remote Sensor System
TSASB	Tactical Systems Automated Services Branch (MCTSSA)
TSCE	technical and systems control equipment
TSDB	Tactical Systems Development Branch (MCTSSA)
TSIU	telephone security interface unit
TSM	technical systems model
TSOR	tentative specific operational requirement
TSP	test support package
TSSB	Tactical Systems Support Branch (MCTSSA)
TSTB	Tactical Systems Test Branch (MCTSSA)
T^2C^3P	Theater and Tactical Command, Control and Communications Panel (JCS)
TTY	teletypewriter
TUG	TCAC Users Group
TW/AA	Tactical Warning and Attack Assessment System (WWMCCS)
TWAES	Tactical Warfare Analysis and Evaluation System (now TWSEAS)
TWSEAS	Tactical Warfare Simulation, Evaluation, and Analysis System (USMC)
UE	User Equipment (NAVSTAR GPS)
UGS	unattended ground sensor
UHF	ultra high frequency
UKADGE	United Kingdom Air Defense Ground Environment
ULCS	unit level circuit switch
ULMS	unit level message switch
ULS	unit level switch
UNAAF	Unified Action Armed Forces (JCS Pub. 2)
UNITREP	Unit Status and Identification Report (USMC)
UPS	Universal Polar Stereographic (Grid System)
URO	user readout (device-PLRS)
USAREUR	U.S. Army, Europe
USB	upper sideband
USCINCRED	Commander-in-Chief, U.S. Readiness Command
USEUCOM	U.S. European Command

USREDCOM	U.S. Readiness Command
UTM	Universal Transverse Mercator (Grid System)
UU	user unit (PLRS)
UWSM	universal work station module
VCAU	voice communications access unit (TAOM)
VDC	volts, direct current
VFMED	variable format message entry device (Army)
VHF	very high frequency
VHSIC	very high speed integrated circuit
VMAQ	Marine tactical electronic warfare squadron
VMC	visual meteorological condition (MATCALS)
VMFP	Marine tactical reconnaissance squadron
VOCODER	voice coder
VPU	voice processor-only, plug-in unit (VACTOR)
VSAT	Very Small Aperture Terminal Satellite
V/STOL	vertical/short takeoff and landing
WAVELL	British command and control system
WBMC	wideband multichannel
WBSC	wideband single channel
WIP	Warfighting Improvement Program
WIS	WWMCCS Information System
WIN	WWMCCS Intercomputer Network
WOC	wing operation center (Air Force)
WPM	words per minute
WWMCCS	Worldwide Military Command and Control System

APPENDIX B
DEFINITIONS

Action Element (AE)	The lowest level units or elements required to carry out tasks assigned by OPFACs. Examples of AEs include an aircraft, a helicopter, an artillery battery, a mortar platoon, and a rifle platoon.
Analog Signal	A nominally continuous electrical signal that varies in some direct correlation to a non-electrical signal impressed on a transducer. The electrical signal may vary its frequency or amplitude, for instance, in response to change in phenomena or characteristics such as sound, light, heat, position or pressure. (FED-STD 1037)
Army Tactical Data Link-1 (ATDL-1)	A point-to-point, real-time digital data link using serial transmission frame characteristics and standard message formats at a basic speed of 1200 bps. This data link interconnects Army tactical air control/defense-oriented systems. The Marine Corps also uses this link for control and coordination of SAM systems by the TAOC.
Architecture	An architecture is an aggregate or set of elements systematically associated and structured to accomplish a purpose and is characterized by the unique organization of its elements. A command and control architecture is a set of associated command and control elements (C^2Es) arranged in a command structure and communication network to enable a commander to plan, direct, coordinate, and control the operations of his forces. Each C^2E includes the essential equipment, communications, personnel, and procedures to perform its functions.
Automatic Request-Repeat (ARQ)	A system of error control for data transmission in which the receiving terminal is arranged to detect a transmission error and automatically transmit a request-repeat (RQ) signal to the transmit terminal. The transmit terminal then retransmits the character, code block, or message until it is either correctly received or the error persists beyond a predetermined number of transmittals. (FED-STD 1037)
AUTODIN	A worldwide data communications network of the Defense Communications System; acronym for AUTOmatic DIgital Network. (FED-STD 1037)

Automatic Data Processing (ADP)	The recording, filing, computing, and production of data by means of electronic computers and associated auxiliary equipment. (U.S. Navy ADP Glossary)
Automated Data Processing System (ADPS)	An automated data processing system is an aggregation of required software and the support resources (ADPE, manpower, communications, services, and facilities). The ADPS includes one or more automated data systems (ADS) and generally is associated with a distinct suite of hardware. The configuration of ADPS can be: all ADSs and their supporting resources at a single activity, and ADS and its associated resources that support a single function at one or more activities, or an aggregation of types of activity with a common function and/or mission. (Marine Corps TIC)
Automated Information System (AIS)	Formerly management information system (MIS). A collection of functional user and automated data processing (ADP) people, procedures, and equipment, including automated data processing equipment (ADPE) designed, built, operated, and maintained to collect, record, process, store, retrieve, and display information essential to a commander in executing the command and management functions of planning, directing, and controlling the use of resources to accomplish missions assigned. (For purposes of this document AIS are automated and exclude tactical command and control (TC2) systems.) (Marine Corps TIC)
AUTOSEVOCOM	A secure voice network of the Defense Communications System. Acronym for AUTOmatic SEcure VOice COMmuniations. (FED-STD 1037)
AUTOVON	A worldwide automatic communications system for end-to-end circuit-switched voice connections to the Defense Communications System. Acronym for AUTOmatic VOice Network. Note: Message switched digital traffic of the AUTODIN is carried between switching centers of the AUTOVON. (FED-STD 1037)
Baseline	A configuration identification document or a set of such documents formally designed and fixed at a specific time during a configuration item's life cycle. Baselines, plus approved changes from those baselines, constitute the current configuration identification. (MIL-STD-480A)
Baud	The unit of modulation rate. One baud corresponds to a rate of one unit interval per second, where the modulation rate is expressed as the reciprocal of the duration in seconds of the unit interval. Example: If the duration of the unit interval is 20 milliseconds, the modulation rate is 50 baud. (FED-STD 1037)

Binary Digit (Bit)	1. In pure binary notation, either of the characters, 0 or 1. 2. A unit of information equal to one binary decision or the designation of one of two possible and equally likely states of anything used to store or convey information. (FED-STD 1037)
BLACK Designation	See RED/BLACK concept.
Buffer	1. A routine or storage used to compensate for a difference in rate of flow of data, or time of occurrence of events, when transferring data from one device to another. (FED-STD 1037) 2. An isolating circuit used to prevent a driven circuit from influencing the driving circuit. (FED-STD 1037) 3. To allocate and schedule the use of buffers. (FED-STD 1037)
Channel	1. A single unidirectional or bidirectional path for transmitting or receiving, or both, of electrical signals, usually in distinction from other parallel paths. (FED-STD 1037) 2. A single path provided from a transmission medium either by physical separation (e.g., multi-pair cable) or by electrical separation (e.g., frequency or time division multiplexing). (FED-STD 1037) 3. A connection between initiating and terminating nodes of a circuit. (FED-STD 1037) 4. A path along which signals can be sent, e.g., data channel, output channel. (FED-STD 1037) 5. The portion of a storage medium that is accessible to a given reading or writing station; e.g., track, band. (FED-STD 1037) 6. In information theory, that part of a communications system that connects the message source with the message sink. (FED-STD 1037)
Circuit	1. An electrical path between two or more points, capable of providing a number of channels. (JCS Pub. 1, Jan 86) 2. A number of conductors connected together for the purpose of carrying an electrical current. (JCS Pub. 1, Jan 86)
Command and Control (C2)	The exercise of authority and direction by a properly designated commander over assigned forces in the accomplishment of his mission. Command and control functions are performed through an arrangement of personnel, equipment, communications, facilities, and procedures employed by a commander in planning, directing, coordinating, and controlling forces and operations in the accomplishment of the mission. (JCS Pub. 1, Jan 86)

Command and Control Element (C^2E)	An element of a command and control network. C^2Es provide commanders with the facilities required to plan, direct, coordinate, and control the operations of their forces. Each C^2E includes the essential equipment, communications, personnel, and procedures to perform its functions. C^2Es may be subdivided into operational facilities (OPFACs) and action elements (AEs), q.v.
Command and Control (C2) System	The facilities, equipment, communications, procedures, and personnel essential to a commander for planning, directing, and controlling operations of assigned forces pursuant to the missions assigned. (JCS Pub. 1, Jan 86)
Commonality	A quality which applies to material or systems: a. possessing like and interchangeable characteristics enabling each to be utilized, or operated and maintained by personnel trained on the other without additional specialized training. b. having interchangeable repair parts and/or components. c. applying to consumable items interchangeably equipment without adjustment (JCS Pub. 1, Jan 86)
Compatibility	1. Capability of two or more items, components of equipment, or material to exist or function in the same system or environment without mutual interference. (JCS Pub. 1, Jan 86) 2. Systems for tactical command and control, and communications are compatible with one another when necessary information can be exchanged at appropriate levels of command directly and in usable form. Equipments are compatible with one another if signals can be exchanged between them and if the equipments or systems being interconnected possess comparable performance characteristics, including suppression of undesired radiation. DoD Dir 4630.5)
Configuration Management	A discipline applying technical and administrative direction and surveillance to (a) identify and document the functional and physical characteristics of a configuration item, (b) control changes to those characteristics, and (c) record and report changes to processing and implementation status. (MIL-STD-480A)
Data Link	The means of connecting one location to another for the purpose of transmitting and receiving data (JCS Pub. 1, Jan 86)
Digital Signal	A nominally discontinuous electrical signal that changes from one state to another in discrete steps. The electrical signal could change its amplitude or polarity. Analog signals may be converted to digital signals by quantizing. (FED-STD 1037)

Forward Error Correction (FEC)	A system of error control for data transmission wherein the receiving device has the capability to detect and correct any character or code block which contains a predetermined number of bits in error. FEC is accomplished by adding bits to each transmitted character or code block using a predetermined algorithm. (FED-STD 1037)
Frequency Hopping	An electronic counter-countermeasure (ECCM) technique in which the instantaneous carrier frequency of a signal is periodically relocated, according to a predetermined code,to other positions within a frequency spectrum much wider than that required for normal message transmission. The receiver uses the same code to keep itself in synchronism with the hopping pattern. (FED-STD 1037)
Frequency Shift Keying	A form of frequency modulation in which the modulating signal shifts the output frequency between predetermined values and in which the output signal has no phase discontinuity. Commonly the instantaneous frequency is shifted between two discrete values termed the mark and space frequencies. (FED-STD 1037)
Hardware	1. Physical equipment used in data processing, as opposed to computer programs, procedures, rules and associated documentation. (MCO P5200.15) 2. The physical components of a system. (FED-STD 1037)
Hertz (Hz)	The hertz is the frequency of a periodic phenomenon of which the period is one second. (FED-STD 1037)
High Order Language	A programming language that is intended to be machine independent and more easily understood by humans than machine language. (U.S. Navy ADP Glossary)
Initial Operational Capability (IOC)	The first attainment of the capability to employ effectively a weapon, item of equipment, or system of approved specific characteristics, and which is manned or operated by an adequately trained, equipped, and supported military unit or force. (JCS Pub. 1, Jan 86)
Integrated Logistic Support	A composite of all the support considerations necessary to ensure the effective and economical support of a system for its life cycle. It is an integral part of all other aspects of systems acquisition and operations. Integrated logistics support is characterized by harmony and coherence among all the logistic elements. (MCO P5000.10)

Interface

1. A boundary or point common to two or more similar or dissimilar command and control systems, subsystems, or other entities against which, or at which, necessary information flow takes place. (JCS Pub. 1, Jan 86)
2. A boundary or point common to two or more systems or other entities across which useful information flow takes place. (It is implied that useful information flow requires the definition of the interconnection of the systems which enables them to interoperate.) (FED-STD 1037)
3. A concept involving the definition of the interconnection between two equipments or systems. The definition includes the type, quantity, and function of the interconnecting circuits, and the type and form of signals to be interchanged via those circuits. Mechanical details of plugs, sockets, and pin numbers, etc., may be included within the context of the definition. (FED-STD 1037)
4. The process of interrelating two or more dissimilar circuits or systems. (FED-STD 1037)

Levels of Interface

The Marine Corps Technical Interface Concepts (TIC) describes five levels of interface used to indicate the degree of automation that exists, is required, or is desired for the interface between OPFACs/systems. These levels are used in this document and are described in the following paragraphs. The figures that accompany the descriptions indicate the same level of automation on each side of the interface. Practically there are 15 unique combinations that can exist, i.e., 1-1, 1-2, 1-3, 1-4, 1-5, 2-2, 2-3, 2-4, 2-5, 3-3, 3-4, 3-5, 4-4, 4-5, and 5-5.

Level One (1) Interface. This level is completely manual. The interfacing OPFACs/systems are separate and independent (figure B-1). The information is translated into the proper message format by an operator and transmitted across the interface (via a teletype for example). The OPFACs may or may not have supporting tactical command and control systems, but if present, the systems are not participants in the interface.

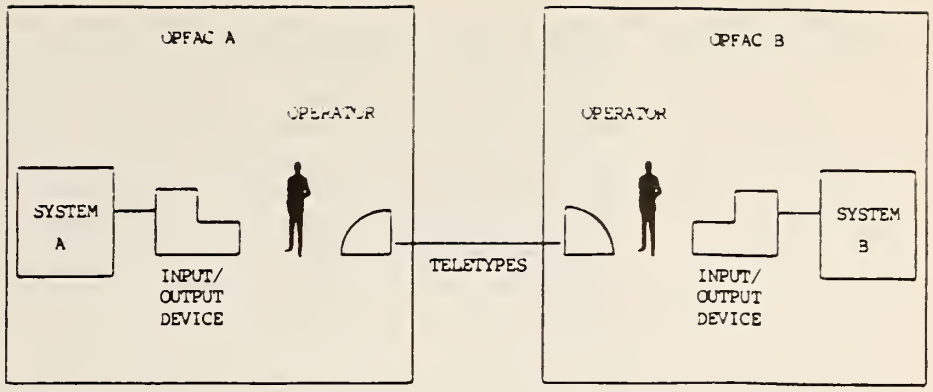

Figure B-1. Level 1 Interface

Level Two (2) Interface. In Level 2 (Figure B-2), a liaison team from OPFAC/system B is collocated with OPFAC/system A and vice versa. The liaison team consists of an operator, an input/output device, and communications facilities. This level is also manual, as the exchange of information takes place between the two operators. It is the responsibility of the operator from OPFAC/system A to translate the information into an acceptable form for transmission. Joint message standards may or may not be employed at this level.

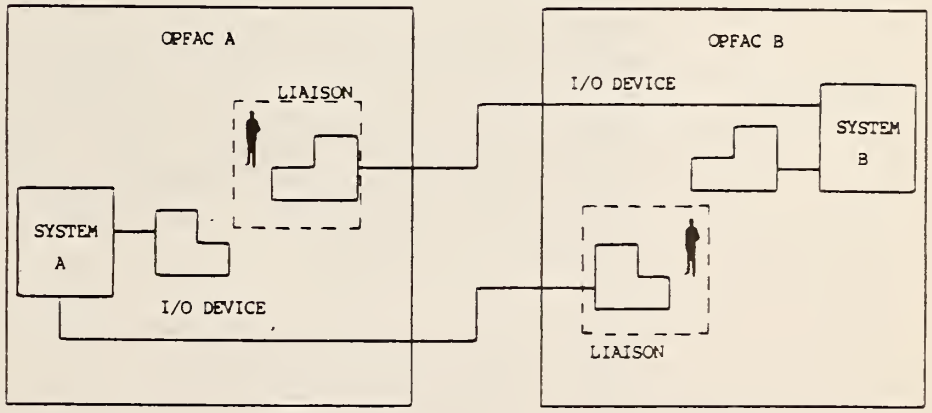

Figure B-2. Level 2 Interface

Level Three (3) Interface. Level 3 is similar to Level 2, but replaces the collocated operators with automated aids (Figure B-3). These automated aids assist the operator of each system in translating the information from his own system into a form that is acceptable by the other system, and vice versa. This is necessary when the two systems use different data presentation standards. Each system must use a standardized format for data presentation to allow the automated aids to efficiently translate from one format to another.

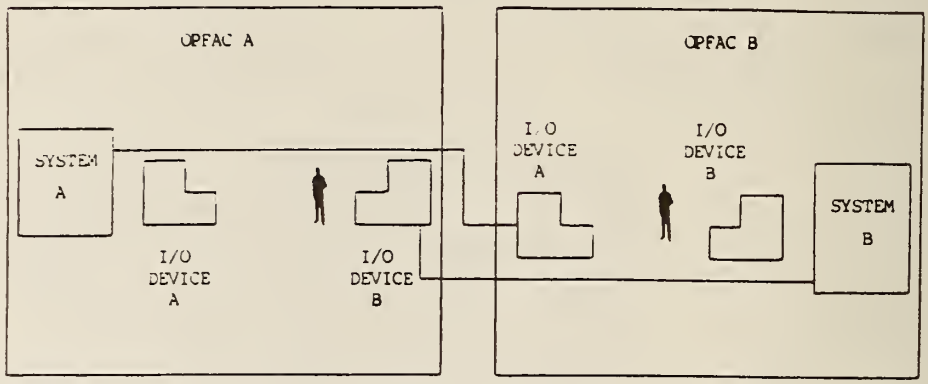

Figure B-3. Level 3 Interface

Level Four (4) Interface. In level 4, the interface is automated (Figure B-4). Information can be exchanged across the interface without human intervention. This requires that the same message standards be adopted by the OPFACs/Systems participating in the interface. Restrictions are imposed on the interface to satisfy both security and operational requirements. Some examples of the restrictions that can be used are:

a. Human monitoring of the requests and editing replies passing through the interface.

b. Restricting access to the data bases of the systems involved in the interfaces to a limited portion storing information which may be exchanged with other systems.

c. Information in the data base must be labelled according to whether or not it may be exchanged with other systems. Only information with the correct "label" can pass through the interface.

d. Using any other device peculiar to a given system.

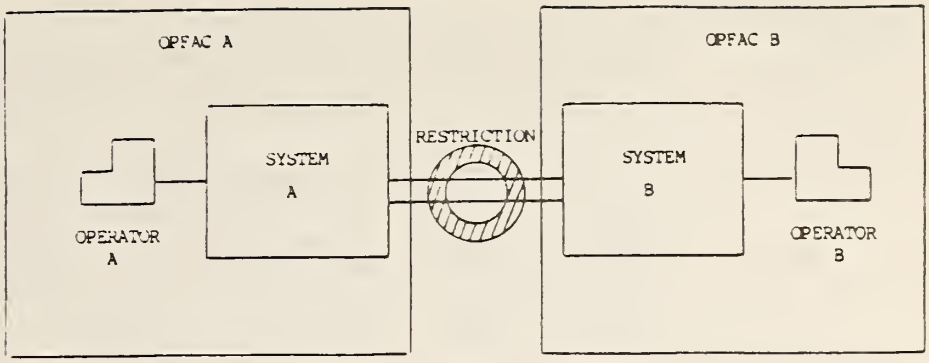

Figure B-4. Level 4 Interface

Level Five (5) Interface. Level 5 also represents a fully automated interface, but one without any restrictions or controls imposed (Figure B-5). This may not be acceptable for either security or operational requirements. One system can use the data contained in the data base of the other system without human intervention. The OPFACs/systems involved must use the same standards, and they will function virtually as one system through the interface.

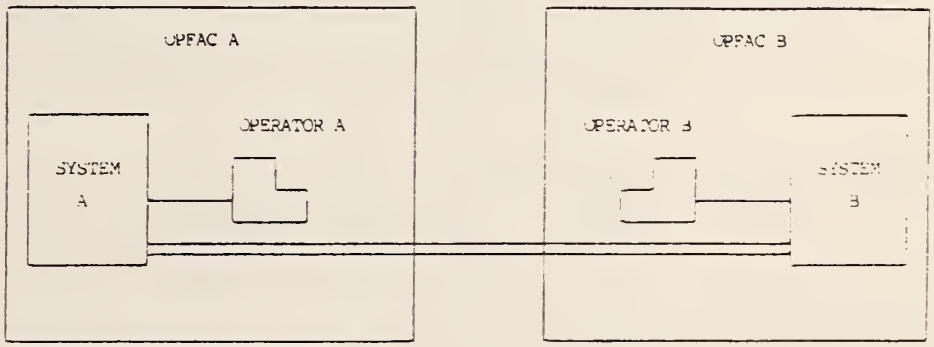

Figure B-5. Level 5 Interface

Interoperability	1. The ability of systems, units or forces to provide services to and accept services from other systems, units or forces and to use the services so exchanged to enable them to operate effectively together. (JCS Pub. 1, Jan 86) 2. The condition achieved among communications-electronics systems, or items of communications-electronics equipment, when information or services can be exchanged directly and satisfactorily between them and/or their users. The degree of interoperability should be defined when referring to specific cases. (JCS Pub. 1, Jan 86)
Intraoperability	Interoperability among Marine Corps systems. May be used when internal Marine Corps information exchange requirements are being differentiated from external or joint/combined requirements. (MCO 3093.1A)
Life-Cycle Cost	The total cost to the Government for the development, acquisition, and logistic support of a system, or equipments, over a defined life span. It includes cost of development, acquisition, operation, support, and disposal (where applicable). (MCO P5000.10)
Link	1. The communication facilities existing between adjacent modes. (FED-STD 1037) 2. A portion of a circuit designed to be connected in tandem with other portions. (FED-STD 1037) 3. A radio path between two points, called a radio link, which may be undirectional, half duplex, or full duplex. The term link should be defined or qualified when used. It is generally accepted that the signals at each end of a link are in the same form. (FED-STD 1037).
LINK 1	A NATO point-to-point digital data link utilizing serial transmission frame characteristics and standard message formats, at a speed of 600, 750, 1200, or 1500 bits per second. Transmission characteristics and standards for LINK 1 are set forth in Standardization Agreement (STANAG) 5501.
LINK 4	A NATO time-division digital transmission link between control stations and controlled aircraft. It provides the capability for automatic transmission of orders, status, and other information. Data exchange is accomplished on a fully-automatic link at 5000 bits per second (bps) using serial information. Transmission characteristics and standards for LINK 4 are set forth in STANAG 5504. NATO Link 4 is identical to U.S. TADIL C.
LINK 11	A NATO netted digital data link utilizing parallel transmission frame characteristics and standard message formats at either 1364 or 2250 bits per second. Transmission characteristics and standards are set forth in STANAG 5511. NATO LINK 11 is identical to U.S. TADIL A.

LINK 14	A semiautomatic broadcast data link employed by the Navy, utilizing internationally-agreed radio teletype transmission characteristics and standard message formats at modulation rates of 60, 75, and 100 bauds. Transmission characteristics and standards for LINK 14 are set forth in the U.S. Navy Book of Standards for Tactical Data Systems (NAVTACSTANS). (OPNAVINST C5711.91B)
Link G	Extended line-of-sight (LOS) CATF/CLF link (NTS designation).
Link H	Line-of-sight CATF/CLF link (NTS designation).
Loop	A single connection from a switching center or individual message distribution point to the terminals of an end instrument. (FED-STD 1037)
Maintainability	The demonstrated capability to be effectively maintained by the level of personnel skill anticipated to be available under service conditions. (MCO 5000.11A)
Marine Corps Systems Acquisition Review Council (MSARC)	A board of principal staff general officers who review each major acquisition program at major decision milestones to recommend to the Commandant initiation, continuation, reorientation, or termination of the program. The MSARC is also convened between major milestones when program parameters are threatened or the direction and progress of the program are in question. Membership consists of the Assistant Commandant of the Marine Corps (Chairman); the Chief of Staff; the Commanding General, Marine Corps Development and Education Command; the deputy chiefs of Staff; the Director C^4 Systems Division; the Director of Intelligence; the Fiscal Director; and the Legislative Assistant to the Commandant. (MCO 5000.15)
Mass Memory	A large capacity storage device on-line to the computer. Usually a peripheral storage device, such as a magnetic tape or disc. (U.S. Navy ADP Glossary)
Main Distribution Frame (MDF)	A distribution frame, on one part of which terminate the permanent outside lines entering the central telephone and communication office building and on another part of which terminate the subscriber line multiple cabling, trunk multiple cabling, etc., used for associating any outside line with any desired terminal in such a multiple or with any other outside line. NOTE: It usually carries the central office protective devices and functions as a test point between line and office. The phrase "outside line" includes radio channels or circuits as appropriate. Generally, a main distribution frame carries on the vertical side all outside lines and their protective devices; and on the horizontal side, all connections to central equipment

which may be assigned to particular outside lines. As used in communication facilities other than telephone, all station lines and equipments terminate on the vertical side, and all patch fields on the horizontal side. (FED-STD 1037)

Message Standards — Message standards are message formats, formatting rules and conventions, and acknowledgment instructions, supported by data standards. Message standards are specified in USMC, other service, and joint Technical Interface Design Plans (TIDPs), Joint Chiefs of Staff (JCS) Publications, and various North Atlantic Treaty Organization (NATO) Standardization Agreements (STANAGs). (Marine Corps IMP)

Microcomputer — A computer implemented with large-scale integration (LSI) central processing unit (CPU) (microprocessor) chips. It may have 4, 8, 16, (or more) bit word length. A microprocessor system includes a microprocessor CPU, program memory (usually read only memory (ROM)), data storage (usually random access memory (RAM)), I/O circuitry, control and interrupt circuitry, and clock generators. (U.S. Navy ADP Glossary)

Microprocessor — A large-scale intergration (LSI) chip, usually containing a small set of general registers, control circuitry, a small instruction set, and some input/output (I/O) capability. The microprocessor is usually used as the CPU of a microcomputer.

Minicomputer — A small, inexpensive computer, the size and complexity of which is the option of the various computer manufacturers. Word lengths are generally 18 bits or less. The I/O capability is generally limited to 4 channels, or less, and the I/O processing is usually accomplished by the CPU. (U.S. Navy ADP Glossary)

Missile Battery Data Link (MBDL) — An MBDL is a point-to-point link operated in a roll-call manner, utilizing serial transmission frame characteristics and standard message formats at a basic speed of 750 bits per second. MBDL is used between Army air defense missile battery units and AADCPs.

Modem — Acronym for MOdulator-DEModulator. A device that modulates and demodulates signals. Modems are primarily used for converting digital signals into quasi-analog signals for transmission and for reconverting the quasi-analog signals into digital signals. Many additional functions may be added to a modem to provide for customer service and control features. (FED-STD 1037)

Module — 1. A hardware system portion treated as a separate logical entity for purposes of design, fabrication, implementation and replacement or modification. (U.S. Navy ADP Glossary)

2. The hardware modular design concept defines a module as an interchangeable plug-in item containing components which represent an incremented block for expanding computer capacity. (U.S. Navy ADP Glossary)

3. A module is an interdependent subset of a computer program which performs an identifiable task. It is normally designed to interact with other modules at one level of control, generally through the executive/operating system. Operating system modules conform to specific standards so that control programs will have an identical interface with all processing modules. A program module is designed to act independently with the minimum amount of interface to all other modules of the system. (U.S. Navy ADP Glossary)

Narrow Band Signal — 1. Any Analog signal or analog representation of a digital signal whose essential spectral content is limited to that which can be contained within a voice channel of nominal 4 kHz bandwidth. (FED-STD 1037)

Near-Real Time — Delay caused by automated processing and display between the occurrence of an event and reception of the data at some other location. (See also real time.) (JCS Pub. 1, Jan 86)

Node — 1. In network topology, a terminal of any branch of a network or a terminal common to two or more branches of a network. (FED-STD 1037)
2. In a switched communications network, the switching points, which may also include patching and control facilities. (FED-STD 1037)
3. In a data network, the location of a data station that interconnects data transmission lines. (FED-STD 1937)

Operational Facility — Those command and control elements (C^2Es) specifically tasked to plan, direct, coordinate, and control tactical operations. Examples of OPFACs include fire direction centers (FDCs), forward observers (FOs), direct air support centers (DASCs), and flight leaders.

Operational Test and Evaluation (OT&E) — Test and evaluation which focuses on the effectiveness and suitability of systems and equipment under realistic operational conditions. (MCO P5000.10)

Processor — In hardware, a machine capable of data processing, such as a pocket calculator, minicomputer, or microcomputer. In software, a computer program that includes the compiling, assembling, translating, and related functions for a specific programming language, e.g., COBAL processor or FORTRAN processor.

Programming Language — A language which is used to construct computer programs. An artificial language which can be "understood" by a computer.

Protocol Standards	The procedural rules that allow TDSs and interconnecting equipment to interchange information. They provide conventions for establishing physical transmission paths, activation and control of data links, recovery from errors, procedures for interchange of information between networks, and rules for users to interface with a data communications network. Protocol standards are those conventions and procedures that can be applied to the design and development of TDSs and interconnecting equipment to ensure their interoperability. Protocol standards are documented in DoD/MIL-STDs, the TIDP for Marine Tactical Systems, TRI-TAC performance specifications and, for Marine Corps-unique equipment, functional or product specifications, in accordance with MIL-STD-490A. (Marine Corps IMP)
Real Time	The absence of delay, except for the time required for the transmission by electromagnetic energy, between the occurrence of an event, and the knowledge of the event, or reception of the data at some other location. See also near-real time. (JCS Pub. 1, Jan 86)
RED/BLACK Concept	That concept that electrical and electronic circuits, components, equipments, systems, etc., which handle classified plain language information in electric signal form (RED) be separated from those which handle encrypted or unclassified information (BLACK). Under this concept, RED and BLACK terminology is used to clarify specific criteria relating to, and to differentiate between such circuits, components, equipments, systems, etc., and the areas in which they are contained. (FED-STD 1037)
Reliability	Demonstrated, satisfactory, and effective performance in accordance with program objectives in a realistic operational environment, for stated periods of time, without failure or performance degradation below specified limits. (MCO P5000.10)
Required Operational Capability (ROC) Statement	A brief document which includes a statement of need, a description of the threat or operational deficiency to be overcome, minimum essential performance bounds, concept of employment, technical assessment, and initial broadbased estimates of funds and personnel resources. (MCO P5000.10)
Signals Intelligence (SIGINT)	A category of intelligence information comprising all communications intelligence, electronics intelligence, and telemetry intelligence. (JCS Pub. 1, Jan 86)
Software	1. Computer programs, procedures, rules and any associated documentation concerned with the operation of a data processing system. (MCO 5200.15)

2. Any program which is stored in read-only memory (ROM) or random access memory (RAM). (MCO 5200.15)
3. A collection of computer programs and operational procedures required for the use of a computer. (MCO 5200.15)
4. The totality of programs and routines used to extend the capabilities of automatic data-processing equipment, such as operating system, compiler, and assembler routines and subrountines. (MCO 5200.15)

Spread Spectrum — A communications technique in which the modulated information is transmitted in a bandwidth considerably greater than the frequency content of the original information. This technique affords advantages in interference avoidance and multiple access. (FED-STD 1037)

Supportability — Reasonable indiction that logistic support in a deployed status is feasible. (MCO 5000.11A)

Tactical Command and Control (TC2) System — The equipment, communications, procedures, and personnel essential to a commander for planning, directing, coordinating, and controlling tactical operations of assigned forces pursuant to the missions assigned.

a. Automated Tactical Command and Control System. A command and control system or part thereof which manipulates the movement of information from source to user without human intervention. (Automated execution of a decision without human intervention is not mandatory.) (JCS Pub. 12, Vol I)

b. Semiautomated Tactical Command and Control System. A machine-aided command and control system wherein human intervention is required in varying degrees to operate the system. (JCS Pub. 12, Vol I)

c. Manual Tactical Command and Control System. A command and control system that acquires, processes, and passes information generated by man at the source and is received, processed, and acted upon by manual means. (JCS Pub. 12, Vol I)

Tactical Data System (TDS) — An interacting assembly of procedures, system processes, and methods which includes equipment specifically designed to collect, display, evaluate, and disseminate data for the purpose of supporting the command and control of military forces. The term specifically includes, but is not limited to:

a. Tactical command and control systems
b. Tactical computer systems and equipment
c. Intelligence systems
d. Sensor systems and equipment
e. Communications systems and equipments

(MCO 3093.1A)

Tactical Digital Information Link (TADIL)	A JCS approved standardized communications link suitable for transmission of digital information. A TADIL is characterized by its standardized message formats and transmission characteristics. 1. TADIL A. A netted digital data link utilizing parallel transmission frame characteristics and standard message formats at either 1364 or 2250 bits per second. Transmission characteristics and standards for TADIL A are set forth in Chapter 1 of JCS Pub 10. Identical to NATO Link 11. 2. TADIL B. A point-to-point digital data link utilizing serial transmission frame characteristics and standard message formats at a basic speed of 1200 bits per second. This data link interconnects tactical air defense and air control units. Transmission characteristics and standards for TADIL B are set forth in Chapter II of JCS Pub 10. Message formats are the same for TADIL B and TADIL A. 3. TADIL C. A time-division digital data transmission link between control station and controlled aircraft. It provides the capability for automatic transmission of orders, status, and other information. Data exchange is accomplished on a fully-automatic link at 5000 bits per second, using serial transmission. Transmission characteristics and standards for TADIL C are set forth in Chapter IV of JCS Pub 10. Identical to NATO Link 4. 4. TADIL J. A secure, jam-resistant, nodeless data link which uses the Joint Tactical Information Distribution System (JTIDS) and the protocols, conventions, and fixed-word message formats defined by the JTIDS Technical Interface Design Plan--current edition.
Telecommunications	Any transmission, emission, or reception of signs, signals, writings, images, sounds or information of any nature by wire, radio, visual or other electro-magnetic systems. (JCS Pub. 1, Jan 86)
Teleprocessing	The combining of telecommunications and computer operations interacting in the automatic processing, reception, and transmission of data and/or information. (JCS Pub. 1, Jan 86)
Vocoder	A contraction of Voice-Operated Coder. A device used to compress the frequency bandwidth requirement of voice communications. It consists of an electronic speech analyzer which converts the speech waveform to several simultaneous analog signals and an electronic speech synthesizer which produces artificial voice sounds in accordance with analog control voltages. (MIL-STD-188-120)
Wideband Signal	Any analog signal or analog representation of a digital signal whose essential spectral content is broader than that which can be contained within a voice channel of nominal 4 kHz bandwidth. (FED-STD 1037)

APPENDIX C

SYSTEMS INTERFACE REQUIREMENTS

1. Introduction. Interfaces between operational facilities (OPFACs) and between tactical data systems (TDSs) are described in chapters II, III, and IV. This appendix provides tabulations of these interfaces as a ready reference and as an overview of Marine Corps TDSs interoperability requirements. The Marine Corps Technical Interface Concepts (TIC) should be consulted for the latest configuration controlled tabulation of interface data.

2. Interface Requirements. Tables C-1 and C-2 depict, in matrix format, present and projected system-to-system interface requirements described in this plan.

Table C-1 depicts system-to-system level of interface (manual, semi-automated, or automated) requirements between systems exchanging information.

Table C-2 depicts, in the same basic matrix format, the communications means by which the interface is provided and the associated tactical digital information link (TADIL) where one is used.

Table C-3, at the end of this section, lists the full nomenclature of each TDS/equipment and the short title or acronym by which they are designated in Tables C-1 and C-2.

Tables C-1 and C-2 describe the highest level of interface that may exist between systems. Where an automated interface is indicated, a semiautomated and a manual interface may also exist. Where a semiautomated interface is indicated, a manual interface also probably exists. Not indicated in the tables are the OPFAC-to-OPFAC interfaces provided by the tactical switched telephone system or by record traffic transmitted via the general service or special security communication centers. Most OPFACs and TDSs will be able to exchange information with any other OPFAC or TDS via the interfaces provided by the telephone system or communication centers.

In some cases, access by a TDS to information originating with another TDS is provided by the interface of the two systems with a third system. For example, TCO will receive PLRS position location information and other PLRS data from MIFASS. In another example, MIFASS will receive intelligence information originating in the IAC from TCO. The tables do not indicate an interface between two systems when the interface is through a third TDS.

2.1 Table C-1, TDS Interface Requirements and Interface Levels. In describing interoperability between systems, as opposed to interoperability between OPFACs, the five levels of interfaces described in Appendix B are categorized into three levels. In terms of system-to-system interoperability, interface levels 1, 2, and 3 are all manual since an operator must manually transcribe data received from one system into the second system. Accordingly, only three levels of interface are indicated in Table C-1. They are:

- M - Manual. Includes level 1 - manual (TTY).
  level 2 - manual (man-to-man).
  level 3 - manual (with automated aid).
- S - Semiautomated. This is automated (restricted), defined as level 4 in appendix B.
- A - Automated. This is a fully automated interface or level 5, as defined in appendix B.

In Table C-1, the level of interface is defined for both sides of each interface. Where the same level of interface exists at the systems on both sides of the interface, a single designator appears in the matrix at the intersection of the column and row for the two systems. For example, at the intersection of the row opposite "TAOM" and the column headed "ATACC", the letter "S" appears, indicating that each system has a semiautomated interface with the other system. Where the levels of interface are not the same on both sides of the interface, the letter in the upper half of the box at the intersection indicates the level of interface at the system named at the head of the column. The level of interface at the system named on the left side of the row is indicated by the letter in the lower half of the box. For example, in the case of the interface between MIFASS and the DCT, MIFASS output to the DCT can be at the semiautomated level. DCT output to MIFASS, however, is at the manual level.

2.2 Table C-2, TDS Communication Interfaces. Table C-2 depicts the general character of the interface. The communication medium, requirements for interface controllers, and the use of TADILs are portrayed.

The actual physical interface in each case is provided by either or both of two means that include:

- Cable; e.g., fiber optic cable, 26-pair cable, and wire.
- Radio; e.g., single channel and multichannel.

An additional element of an interface may be an interface device or interface controller. Such a device is necessary where the interoperating systems use incompatible circuit and/or message standards. The MIFASS-PLRS Interface Controller (MPIC) is an example of an interface device required to achieve interoperability between two ADSs.

TADILs are used to achieve interoperability between Marine Corps TDSs and other Service systems, and among some Marine Corps systems. The Marine Tactical Systems (MTS) data link is also used to achieve interoperability between Marine Corps TDSs. It is described in Volume V of the Marine Corps Technical Interface Design Plan (TIDP). A TADIL is a JCS-approved, standardized, communications link suitable for transmission of digital data. TADILs are characterized by standardized message formats and transmission characteristics. TADILs appearing in Table C-2 are listed below and are defined in Appendix B and chapter V.

- TADIL A (NATO Link 11).
- TADIL B.
- TADIL C (NATO Link 4A).
- TADIL J (NATO Link 16).
- ATDL 1.
- NATO Link 1.

THIS PAGE INTENTIONALLY LEFT BLANK

Table C-1. TDSs Interface Requirements and Interface Levels

		USMC																												
						MACCS													MAGIS											
																								ISIS						
		PLRS	MIFASS	TCO	DCT	AN/TYQ-1	ATACC	AN/TYQ-2	AN/TYQ-23	AN/TSQ-122	AN/TSQ-155	AN/TPB-1D	MATCALS	HAWK BCC	HAWK AFU	BCS	FAMDS	AN/TPQ-36	MULE	IAC	TERPES	IIF	JSIP	TIMS	TCAC	CCO					
USMC																														
	PLRS	A	A																											
	MIFASS	A	A	A	S/M		S		A			M				A	M/S	M/S												
	TCO		A	A	S/M		S												S				M							
	DCT		M/S	M/S	M						M					S			S											
MACCS	AN/TYQ-1					S	S	S	S	M	M		M																	
	ATACC		S	S		S	S	S	S		S/M		S							S	S		M	M	M					
	AN/TYQ-2					S	S	S	S	M	M	M	M	A	A															
	AN/TYQ-23		A			S	S	S	S	M	M	M	S	A	A															
	AN/TSQ-122					M		M	M			M	M																	
	AN/TSQ-155		M		M	M	M/S	M	M		M	M	M																	
	AN/TPB-1D		M					M	M	M	M																			
	MATCALS					M	S	M	S	M	M																			
	HAWK BCC							A	A																					
	HAWK AFU							A	A																					
	BCS		A		S/M											S	S	S												
	FAMDS		S/M													S														
	AN/TPQ-36		S/M													S														
	MULE				S																									
MAGIS	IAC			S			S													S	S	S	S	M	S					
	TERPES						S													S				M						
	IIF																			S				M						
	JSIP						M													S			S	M						
	TIMS			M			M													M	M	M	M	M	M					
	TCAC						M													S				M	S	M/A				
	CCO																								A/M	S				
	AIRCRAFT		M	M				A	A	M	M	M/A	/A								A/									
	AN/TPS-32							A/M	A/M																					
	AN/TPS-59							A/M	A/M																					
	AN/TPS-63							A/M	A/M																					

Table C-1. TDSs Interface Requirements and Interface Levels (Cont'd)

	USMC																													
					MACCS														MAGIS											
																								ISIS						
	PLRS	MIFASS	TCO	DCT	AN/TYQ-1	ATACC	AN/TYQ-2	AN/TYQ-23	AN/TSQ-122	AN/TSQ-155		MATCALS	HAWK BCC	HAWK AFU	BCS	FAMDS	AN/TPQ-36	MULE	IAC	TERPES	IIF	JSIP	TIMS	TCAC	CCO					
NAVY																														
AFDS-NTDS					S	S	S	S	M	M																				
ITAWDS-TDS		S	S			S		S		M																				
ITAWDS-TIPS																														
ATDS			S		S	S	S	S																						
NIPS																			M											
FDDS	S																													
AIRCRAFT							S	S	M	M																				
ARMY																														
MCS			S																											
AADCP					S	S	S	S																						
PATRIOT CCS							S	S																						
TACFIRE/AFDS		S													S	S	S													
ASAS			M		M	S													M											
MAGIC																														
EPLRS	A																													
AF																														
AWACS					S	S	S	S																						
CAFMS			S		S	S	S	S																						
CRC/CRP MPC					S	S	S	S																						
TIPI																			M											
AIRCRAFT							S	S	M	M																				
JOINT																														
GPS	S																													
SIS						M	M	M																						
NATO																														
NADGE					S	S	S	S																						

Table C-2. TDSs Communication Interfaces

		USMC																												
						MACCS													MAGIS											
																								ISIS						
		PLRS	MIFASS	TCO	DCT	AN/TYQ-1	ATACC	AN/TYQ-2	AN/TYQ-23	AN/TSQ-122	AN/TSQ-155	AN/TPB-1D	MATCALS	HAWK BCC	HAWK AFU	BCS	FAMDS	AN/TPQ-36	MULE	IAC	TERPES	IIF	JSIP	TIMS	TCAC	CCO					
USMC																														
	PLRS	2	5																											
	MIFASS	5	18	18	18		18		18			3				5	5	5												
	TCO		18	18	18		18													3				18						
	DCT		18	18	18						18					3			1											
MACCS	AN/TYQ-1					15	8	15	15	3	3		3																	
	ATACC		19	18		8	20	15	15		19		19							3	19		10	19	3					
	AN/TYQ-2					15	8	15	15	3	3	3	3	13	13															
	AN/TYQ-23		18			15	20	15	15	3	3	3	8	13	13															
	AN/TSQ-122					3		3	3			3	3																	
	AN/TSQ-155		18		18	3	19	3	3		18	3	3																	
	AN/TPB-1D		3					3	3	3	3																			
	MATCALS					3	19	3	8	3	3																			
	HAWK BCC							13	13																					
	HAWK AFU							13	13																					
	BCS		5		3											3	3	3												
	FAMDS		5													3														
	AN/TPQ-36		5													3														
	MULE				1																									
MAGIS	IAC			3			3													3	3	3	3	3	3					
	TERPES						19													3				3						
	IIF																			3				3						
	JSIP						10													3			3	3						
	TIMS			3			18													3	3	3	3	3	3					
	TCAC						3													3				3	3	3				
	CCO																								3	3				
	AIRCRAFT		2	2				9	12	2	2	2	9								10									
	AN/TPS-32							3	3																					
	AN/TPS-59							3	3																					
	AN/TPS-63							3	3																					

Table C-2. TDSs Communication Interfaces (Cont'd)

LEGEND

1. Cable; e.g., fiber optic cable, 26-pair cable and wire
2. Radio; e.g., single channel and multichannel
3. Cable and radio
4. Cable with an interface controller
5. Cable and radio with interface controller
6. Radio with TADIL A
7. Radio with TADIL B
8. Cable and radio with TADIL B
9. Radio with TADIL C
10. Radio with TADIL J
11. Radio with TADILs A and J
12. Radio with TADILs C and J
13. Cable and radio with ATDL 1
14. Cable and radio with NATO Link 1
15. TADILs A and B
16. TADILs A, B, and J
17. TADILs B and J
18. MTS Data Link
19. TADIL B and MTS
20. TADILs A, B, J, and MTS

Table C-2. TDSs Communication Interfaces (Con't)

	USMC																													
					MACCS														MAGIS											
																							ISIS							
	PLRS	MIFASS	TCO	DCT	AN/TYQ-1	ATACC	AN/TYQ-2	AN/TYQ-23	AN/TSQ-122	AN/TSQ-155	RGDBS	MATCALS	HAWK BCC	HAWK AFU	BCS	FAMDS	AN/TPQ-36	MULE	IAC	TERPES	IIF	JSIP	TIMS	TCAC	CCO						
NAVY																														
AFDS-NTDS					6	6	6	6	2	2																				
ITAWDS-TDS		7	6			6		6		2																				
ITAWDS-TIPS																														
ATDS			6		6	6	6	6																						
NIPS																			2											
FDDS	4																													
AIRCRAFT							9	11	2	2																				
ARMY																														
MCS			3																											
AADCP					8	17	8	17																						
PATRIOT CCS							8	8																						
TACFIRE/AFDS		5													3		3													
ASAS			3		3	3													3											
MAGIC																			3											
EPLRS	2																													
AF																														
AWACS					6	11	6	11																						
CAFMS			8		15	16	15	16																						
CRC/CRP MPC					15	16	15	16																						
TIPI																			3											
AIRCRAFT							9	12	2	2																				
JOINT																														
GPS																														
SIS					7	7	7	7																						
NATO																														
NADGE					14	14	14	14																						

Table C-2. TDSs Communication Interfaces (Cont'd)

LEGEND

1. Cable; e.g., fiber optic cable, 26-pair cable and wire
2. Radio; e.g., single channel and multichannel
3. Cable and radio
4. Cable with an interface controller
5. Cable and radio with interface controller
6. Radio with TADIL A
7. Radio with TADIL B
8. Cable and radio with TADIL B
9. Radio with TADIL C
10. Radio with TADIL J
11. Radio with TADILs A and J
12. Radio with TADILs C and J
13. Cable and radio with ATDL 1
14. Cable and radio with NATO Link 1
15. TADILs A and B
16. TADILs A, B, and J
17. TADILs B and J
18. MTS Data Link
19. TADILs B and MTS
20. TADILs A, B, J, and MTS

Table C-3. Tactical Data Systems

Marine Corps

Aircraft	Aircraft, all types
AN/TPQ-36	Radar Set, Firefinder
AN/TPS-32	Radar Set
AN/TPS-59	Radar Set, Lightweight, 3D
AN/TPS-63	Radar Set
AN/TSQ-122	Operations Central (DASC)
AN/TSQ-155	Improved Data Air Support Central (IDASC)
AN/TYQ-1	Tactical Air Command Central, including Tactical Data Communications Central, AN/TYQ-3A
AN/TYQ-2	Tactical Air Operations Central, including Tactical Data Communications Central, AN/TYQ-3A
ATACC	Advanced Tactical Air Command Central
BCS	Battery Computer System, AN/GYK-29
CCO	Communication Collection Outstation. A generic name for a system to be selected.
DCT	Digital Communications Terminal, AN/PSC-2
FAMDS	Field Artillery Meteorological Data System
GDBS	Radar Ground Directed Bombing System, AN/TPB-1D
HAWK AFU	Hawk Assault Fire Unit, AN/MSW-14
HAWK BCC	Hawk Battery Control Center, AN/TSW-11
IAC	Intelligence Analysis Center, AN/TYQ-19
IIF	Imagery Interpretation Facility, AN/TYQ-12(V)2
IP	Imagery Processing Segment, ES-40
JSIP	Joint-Source Imagery Processor
MATCALS	Marine Air Traffic Control and Landing System
MIFASS	Marine Integrated Fire and Air Support System, AN/UYQ-38(V)
MRAALS	Marine Remote Area Approach and Landing System
MULE	Modular Universal Laser Equipment
PLRS	Position Location Reporting System, AN/USQ-90
TAOM	Tactical Air Operations Module, AN/TYQ-23
TCAC	Technical Control and Analysis Center, AN/TSQ-30
TCO	Tactical Combat Operations System

Table C-3. Tactical Data Systems (Cont'd)

TERPES	Tactical Electronic Reconnaissance Processing and Evaluation System, AN/TSQ-90
TIMS	Tactical Intelligence Management System

Navy

AFDS-NTDS	Amphibious Flagship Data System-Naval Tactical Data System
ATDS	Airborne Tactical Data System
FDDS	Flag Data Display System, AN/UYQ-88(V)
ITAWDS-TDS	Integrated Tactical Amphibious Warfare Data System-Tactical Data System
ITAWDS-TIPS	Integrated Tactical Amphibious Warfare Data System-Tactical Information Processing System
NIPS	Naval Intelligence Processing System, AN/SYQ-9(V)3

Army

AADCP	Army Air Defense Command Post, AN/TSQ-73
ASAS	All Source Analysis System
EPLRS	Enhanced Position Location Reporting System
MAGIIC	Mobile Army Ground Imagery Interpretation Center
MCS	Maneuver Control System AN/UYQ-29 & AN/UYQ-36
PATRIOT CCS	Patriot Command and Control Set, AN/MRC-136
TACFIRE/AFATDS	Tactical Fire Direction System/Advanced Field Artillery Tactical Data System

Air Force

AWACS	Airborne Warning and Control System, E-3A
CAFMS	Computer-Aided Force Management System (TACC-AF), AN/TSQ-92
CRC/CRP	Control and Reporting Center/Control and Reporting Post AN/TSQ-91 & AN/TYC-10 Message Processing Center (MPC)
MPC	Message Processing Center
TIPI	Tactical Information Processing and Interpretation System

Table C-3. Tactical Data Systems (Cont'd)

<u>Joint</u>	
GPS	Navigation System Using Timing and Ranging (NAVSTAR) Global Positioning System
SIS	Special Information System. See JCS Pub.10 for details. SIS is not described in this plan.
<u>NATO</u>	
NADGE	NATO Air Defense Ground Environment

APPENDIX D
EQUIPMENT CATALOG

This appendix catalogs both current and projected Marine Corps communication equipment. Included is equipment utilized in the "snapshots," as well as selected equipment identified in the text of the document or its appendices. The equipment is organized according to equipment categories of the TRI-TAC Program Master Plan, with the addition of categories for the Marine Corps Command and Control System (MACCS), computers, and air traffic control equipment. The items within each category are listed alphanumerically by model number. Tables D-1 and D-2 show the projected IOC dates for new equipment, according to the latest information available at the time this document was being edited. A more detailed description of the equipment can be found in the U.S. Marine Corps Technical Manual, TM-2000-15/2, and applicable TRI-TAC performance specifications.

TABLE OF CONTENTS: EQUIPMENT CATALOG

	Page
Equipment Availability Diagrams (D-1)	D-6
Radio Frequency Chart (D-2)	D-9

SWITCHING EQUIPMENT

Circuit Switches
Message Switches

	Page		Page
AN/GYC-7	D-11	SB-3082(V)2/GT	D-12
AN/TTC-38	D-11	SB-3614( )/TT	D-12
AN/TTC-42	D-11	SB-3865(P)/TTC	D-12
SB-22/PT	D-11	SB-4097/U	D-12

MULTICHANNEL TRANSMISSION EQUIPMENT

Multichannel Radio Sets (Less Satellite)
Multiplex Equipment
Modem Equipment

	Page		Page
AN/GRC-201	D-13	MD-1026( )P/G	D-16
AN/MRC-134	D-13	MD-1061(V)1/USC	D-16
AN/MRC-135	D-13	MD-1065( )(P)/G	D-16
AN/MRC-139	D-13	MD-1067/GRC-201	D-16
AN/TCC-72(MOD)	D-13	TD-660A/G	D-16
AN/TRC-97(C,E)	D-14	TD-754/G	D-17
AN/TRC-166	D-14	TD-1065/G	D-17
AN/TRC-170(V)3	D-14	TD-1069/G	D-17
AN/TSC-15	D-14	TD-1218( )/G	D-17
AN/TSC-95	D-14	TD-1234( )/TTC	D-17
AN/TSC-120 (HFCC)	D-15	TD-1235( )/TTC (RMC)	D-18
MD/700C-6	D-15	TD-1236( )/G	D-18
MD-701/C	D-15	TS-3647( )/G	D-18
MD-1023( )/G	D-15		

SINGLE-CHANNEL TRANSMISSION EQUIPMENT (LESS TERRESTRIAL SATELLITE RADIOS)

Vehicular Radios
Vehicle-Mounted Radios
Manpack Radios
Bench-Mounted Radios
Shelter-Mounted Radios

	Page		Page		Page
AN/VRC/PRC-(SINCGARS)	D-19	AN/MRC-123	D-20	AN/PRC-113	D-22
AN/GRC-112	D-19	AN/MRC-124	D-21	AN/TRC-171	D-22
AN/GRC-125	D-19	AN/MRC-138	D-21	AN/VRC-12	D-22
AN/GRC-134	D-19	AN/MRC-138/UHF	D-21	AN/VRC-82(V)2	D-22
AN/GRC-135A	D-20	AN/PRC-41A	D-21	AN/VRC-83	D-22
AN/GRC-160	D-20	AN/PRC-68	D-21	AN/VRC-85	D-22
AN/GRC-171A(V)2	D-20	AN/PRC-75A	D-21		
AN/GRC-193	D-20	AN/PRC-77	D-21		
AN/MRC-83A	D-20	AN/PRC-94(V)1	D-21		
AN/MRC-110	D-20	AN/PRC-104	D-22		

TERMINAL DEVICES

Telephone Equipment
Teletype Equipment
Data Equipment
Facsimile Equipment
Radar Equipment

	Page		Page		Page
AN/GGC-3A	D-23	AN/TPB-1D	D-25	TA-838( )/TT	D-26
AN/GXC-7A	D-23	AN/TYC-5A(V)	D-25	TA-938/G	D-26
AN/MSC-63	D-23	AN/UGC-74A(V)3	D-25	TA-954( )/TT	D-26
AN/PSC-2	D-24	CV-3333/U	D-25	TH-85/GCC	D-27
AN/TGC-37(V)	D-24	OL-188(V)/TSC-96	D-26		
AN/TGC-46	D-24	QRU	D-26		
ADPE-FMF/CMP	D-24	TA-312/PT	D-26		

TECHNICAL AND SYSTEM CONTROL EQUIPMENT

	Page
AN/TRQ-35	D-28
AN/TSQ-84( )	D-28

SATELLITE EQUIPMENT

	Page		Page
AN/PSC-3	D-29	AN/TSC-96(V)	D-29
AN/TSC-85A	D-29	AN/VSC-7	D-30
AN/TSC-93A	D-29	SCOTT	D-30

INTERFACE EQUIPMENT

Data Control Equipment
Remote Control Equipment

	Page		Page
AN/GRA-6	D-31	Fiber Optic Cable System	D-31
AN/GRA-39A & 39B	D-31	Marine Corps Fiber Optic Multiplex System (MFOMS)	D-32
C-6709/G	D-31		
HYX-57/TSEC	D-31		

COMSEC DEVICES

	Page		Page		Page
HGX-82/TSEC	D-33	TSEC/KG-81	D-34	TSEC/KY-65/75	D-35
HGX-83/TSEC	D-33	TSEC/KG-82	D-34	TSEC/KY-67	D-35
KGX-93/TSEC	D-33	TSEC/KG-84A	D-34	TSEC/KY-68/78	D-35
TSEC/KG-13	D-33	TSEC/KG-94	D-34	TSEC/KY-90	D-35
TSEC/KG-14	D-33	TSEC/KW-7	D-34	TSEC/KYV-2 and -2A	D-36
TSEC/KG-22	D-33	TSEC/KW-37	D-34	TSEC/KYV-5	D-36
TSEC/KG-27	D-33	TSEC/KW-46	D-34	ANDVT	D-36
TSEC/KG-30	D-33	TSEC/KWX-7	D-34		
TSEC/KG-36	D-33	TSEC/KY-8/28/38	D-34		
TSEC/KG-40	D-33	TSEC/KY-57/58	D-35		

MARINE AIR COMMAND AND CONTROL SYSTEMS

	Page		Page
AN/TYA-11	D-37	AN/TYQ-3A	D-38
OE-334/TRC	D-37	AN/TYQ-23(V)1	D-38
AN/TYA-12	D-37	ATACC	D-38
AN/TYA-19	D-37	AN/UYQ-3A	D-39
AN/TYQ-1	D-37	AN/UYQ-4A	D-39
AN/TYQ-2	D-37	AN/TSQ-155V	D-39

COMPUTER EQUIPMENT

	Page
AN/AYK-14(V)	D-40
AN/UYK-7	D-40
AN/UYK-20(V)	D-40
AN/UYK-44(V)	D-40

AIR TRAFFIC CONTROL EQUIPMENT

	Page		Page
AN/TPN-22	D-41	AN/TRN-33	D-41
AN/TPN-30	D-41	AN/TRN-44	D-41
AN/TRC-131A	D-41	AN/TSQ-107	D-42
AN/TRN-29	D-41	AN/TSQ-120	D-42
AN/TRN-30(V)	D-41	AN/TSQ-131(V)	D-42

Figure D-1. Equipment Availability

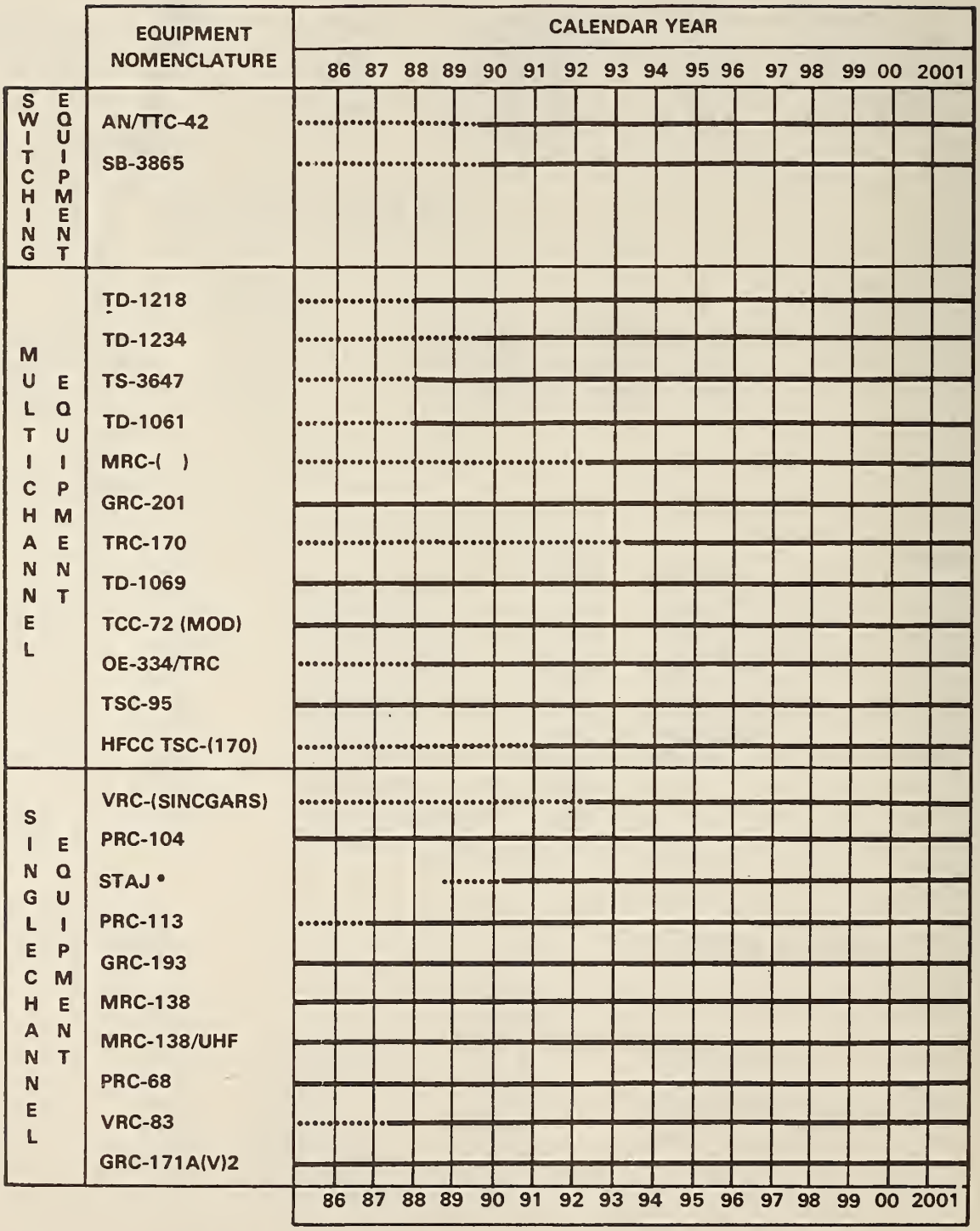

FULL SCALE DEVELOPMENT PHASE
PRODUCTION PROCUREMENT PHASE
AVAILABILITY OF EQUIPMENT

* Mod to AN/PRC-104
AN/MRC-138
AN/GRC-193

Figure D-1. Equipment Availability (Con't)

	EQUIPMENT NOMENCLATURE	CALENDAR YEAR															
		86	87	88	89	90	91	92	93	94	95	96	97	98	99	00	2001
TERMINAL EQUIPMENT	GXC-7A																
	UGC-74																
	UGC-140																
	TA-954																
	PSC-2																
	MSC-63A(SSCC)																
	MSC-63A(TCC)																
	CV-3591																
	ADPE-FMF/CMP																
SATELLITE EQUIPMENT	PSC-3																
	TSC-85A																
	TSC-93A																
	TSC-96(V)																
	SCOTT																
INTERFACE EQUIPMENT	C-6709																
	KY-90																
	FIBER OPTIC CABLE SYSTEM																
COMSEC DEVICES	KY-67 (BANCROFT)																
	KY-68 (DSVT)																
	KG-82																
	KG-84A																
	KG-94/94A																
	KGX-93																
	KY-57/58 (VINSON)																
	KYV-5 (VACTOR)																
		86	87	88	89	90	91	92	93	94	95	96	97	98	99	00	2001

— — — FULL SCALE DEVELOPMENT PHASE
····· PRODUCTION PROCUREMENT PHASE
——— AVAILABILITY OF EQUIPMENT

Table D-3. Radio Frequency Chart :

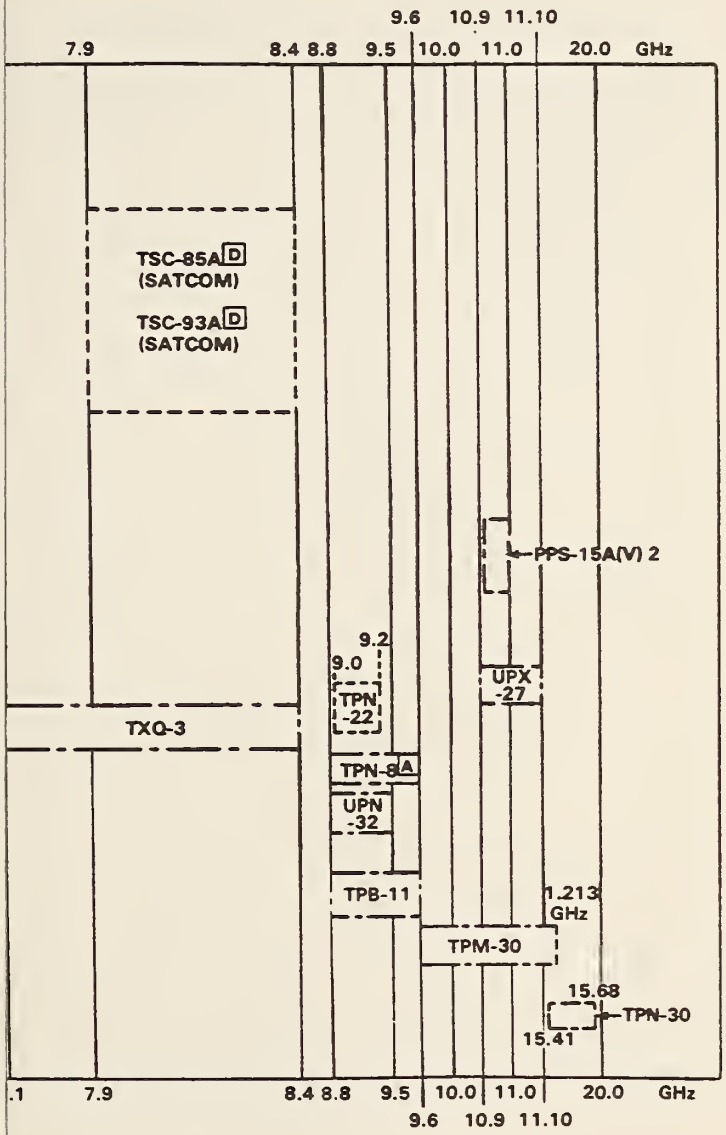

Table D-3. Radio Frequency Chart :

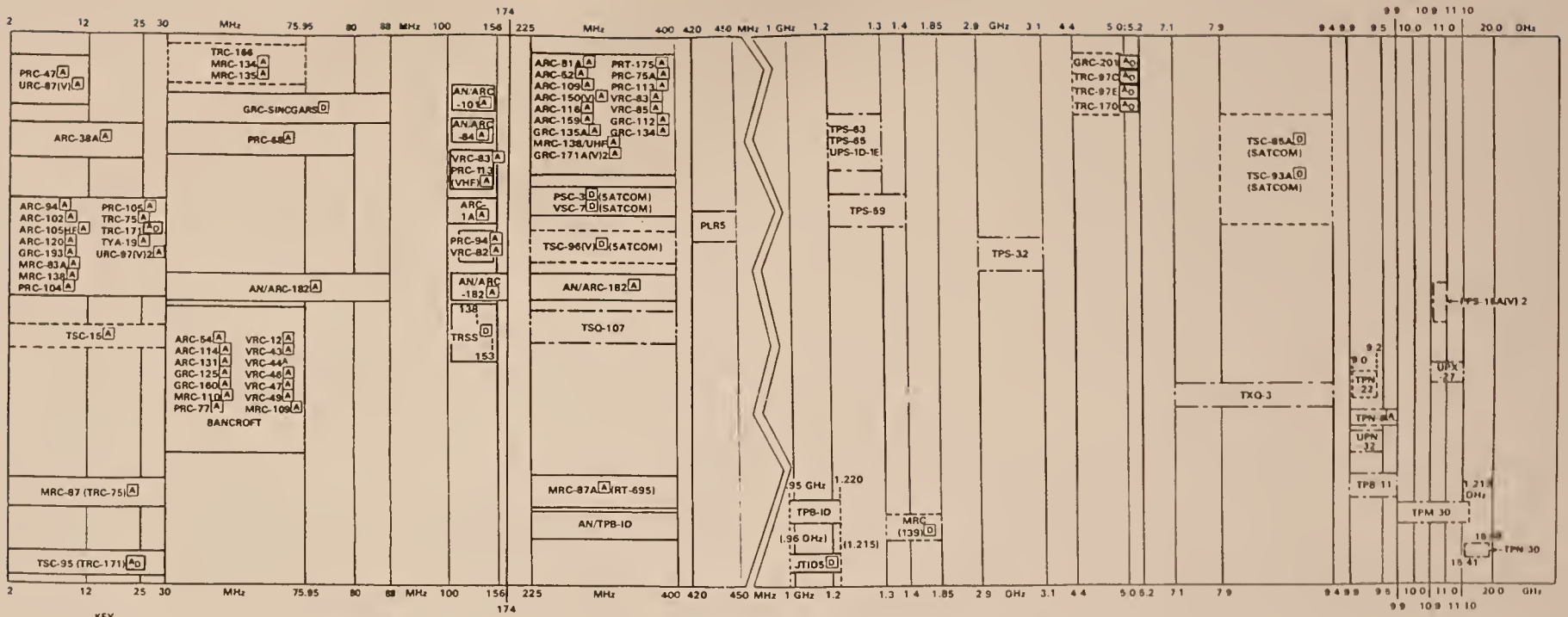

OFFICIAL ITU BANDS

3-30 MHz	HF
30-300 MHz	VHF
300-3000 MHz	UHF
3-30 GHz	SHF
30-300 GHz	EHF

RADAR/MICROWAVE BANDS (U.S.)

.225-.390 GHz	P-BAND
.390-1.55 GHz	L-BAND
1.55-5.2 GHz	S-BAND
5.2-10.9 GHz	X-BAND
15.35-17.25 GHz	K-BAND
10.9-38.0 GHz	K-BAND
36.0-46.0 GHz	Q-BAND
46.0-56.0 GHz	V-BAND
56.0-100.0 GHz	W-BAND

11927 MCDEC, QUANTICO, VA

SWITCHING EQUIPMENT

AN/GRC-7 AUTOMATIC MESSAGE SWITCHING SET

The AN/GYC-7 is the 12-line version of the unit level message switch (ULMS) family being developed as part of the TRI-TAC program to provide austere store-and-forward service of data traffic to a variety of connected terminals and other digital switches. It employs mode VII link protocol in the transmission and reception of data over all dedicated access circuits used as loops. It terminates 12 traffic access circuits and one operator terminal access circuit via 13 WF-16 four-wire cables. Access circuits are dedicated, synchronous, full-duplex, encrypted or non-encrypted, and employed as a flexible mix of loops and trunks. Access circuit modulation is conditioned diphase and the transmission rate is 16 or 32 Kbps, with an information rate of 16 Kbps (8 Kbps with FEC). Operator terminal access circuit modulation is NRZ baseband and the information/transmission 1200 bps. The AN/GYC-7 has an in-transit storage capability of 64K bytes. The AN/GYC-7 and its ancillary items will be configured into two-man transportable packages. It will interface with TSEC/KG-84A, TD-1233, TD-1234, AN/UGC-74A(V)3, AN/TTC-42, SB-3865, and all MTACC systems. The Marine Corps has not yet decided to buy production quantities of the AN/GYC-7.

AN/TTC-38 TELEPHONE AUTOMATIC CENTRAL OFFICE

The AN/TTC-38 is an analog, 4-wire, fully-automatic, switching central office. It is designed for 300 or 600 loops/trunk terminations and is capable of reconfiguration to 2-wire for up to 70 percent of the terminations. Automatic switching capabilities include: 7-digit direct dialing, abbreviated (3-digit) dialing, conference calls, five-level precedence, call forwarding, off-hook dialing, automatic interfacing with AUTOVON and AUTOSEVOCOM systems, and wideband (108 KHz) switching capable of transmitting secure, encrypted signals. Signaling includes 20 or 1600 Hz ringdown, DTMF, and dial pulse. It replaces the AN/TTC-28, AN/MTC-1, and AN/TTC-7.

AN/TTC-42 AUTOMATIC TELEPHONE CENTRAL OFFICE

The AN/TTC-42 is the 150-line member of the unit level circuit switch (ULCS) family being developed under the TRI-TAC program to provide automatic secure and non-secure switched telephone service to primarily digital subscribers. The AN/TTC-42 terminates up to seven CX-11230 cables and eleven 26-pair WM-130 cables. It provides switched service for up to 152 loop and trunks and sole-user patches for up to 144 channels. It has a seven digital trunk group (DTG) capacity, including six DTGs with up to 18 channels (16/32 Kbps) per group, and one DTG with up to 72 channels per group. Digital loop modulation is conditioned diphase, and digital trunk modulation is either conditioned diphase or conditioned dipulse. Switching can be automatic or semi-automatic. Analog or digital conversions are provided as required. Subscriber service functions include loop and trunk hunting, conferencing (progressive--up to 5 conferees), direct subscriber access, abbreviated dialing, precedence, pre-emption, and fixed directory.

SB-22/PT and SB-22A/PT MANUAL TELEPHONE SWITCHBOARDS

The SB-22/PT and the SB-22A/PT are tactical, manual switchboards that can be rapidly installed to provide field facilities for interconnecting 12 local-battery telephone circuits, remote controlled radio circuits, or VF

teletypewriter circuits. Two SB-22/PTs may be stacked to provide a 29-circuit capability by removing one TA-221/PT (operator's pack) and inserting five TA-222/PTs (line packs). Replacing a line pack with a trunk pack permits one-way ringdown, one-way automatic trunk circuits between the SB-22A/PT and any other switchboard with common battery signaling. Tone-Signaling Adapter TA-997/PT, found in some U.S. Army units, provides the operator with a two-wire push-button tone-signaling capability for interfacing automatic switches without operator intervention. For more detailed information, refer to TM-11-5805-262-12.

SB-3082(V)2/GT MANUAL CORDLESS SWITCHBOARD

The SB-3082(V)2/GT provides central switching control for manual or semi-automatic operation of 50 analog circuits. Signaling includes 20 and 1600 Hz ringdown, and dial pulse. It replaces the SB-86/PT.

SB-3614( )/TT TELEPHONE SWITCHBOARD

The SB-3614( )/TT is an analog, automatic, 30-line switch, stackable to 90 lines. Modular construction allows reconfiguration for semiautomatic operation. It is capable of switching both wideband (108 KHz) and narrowband circuits. One SB-3614( )/TT can handle 15 simultaneous conversations. It terminates 2-wire or 4-wire loops and trunks depending on the type terminal card in use. Signaling includes 20 Hz ringdown, DTMF loops, and dial pulse. Trunk/terminal subscriber service functions include loop and trunk hunting, precedence (15 position queue), pre-emption and conferencing. It replaces the SB-86 and some SB-22/PT switches.

SB-3865(P)/TTC AUTOMATIC TELEPHONE SWITCHBOARD

The SB-3865(P)/TTC is the 30-line member of the unit level circuit switch (ULCS) family being developed as part of the TRI-TAC program to provide service to primarily digital, secure and non-secure, voice terminals. It terminates 32 single-channels and 4 orderwire channels via 36 VF-16 cables, and 3 TDM groups via three CX-11230 cables. It provides user and switched service for any combination of up to 30 digital or analog loops or trunks and up to 18 channels (16/32 Kbps) derived from TDM groups. Automatic switching includes loop-to-loop, loop-to-trunk, trunk-to-loop, and trunk-to-trunk. Analog switching can be automatic or semiautomatic, and analog-to-digital conversions are provided as required. Digital trunk/terminal subscriber service functions include loop and trunk hunting, precedence, and pre-emption. The SB-3865(P)TTC replaces the SB-3082(V)2/GT and SB-3614( )/TT switchboards.

SB-4097/U COMMUNICATIONS PATCHING PANEL

The SB-4097/U provides for operator control in cross-connecting and monitoring circuits in the Cable Distribution System, using 26-pair Amphibious Assault Cable. It provides 312 pairs (156 in and 156 out) derived from 12 standard 26-pair cables. All pairs terminate on standard 26-pair connectors mounted on the back of a table-mounted console.

MULTICHANNEL TRANSMISSION EQUIPMENT

AN/GRC-201 RADIO SET

The frequency range of the AN/GRC-201 is 4.4 to 5.0 GHz (SHF). It receives and transmits voice and data signals in troposcatter and LOS modes. It provides for 12 channels of teletype, or 12/24 channels of TDM/PCM traffic. The AN/GRC-201 uses TD-1069/G Time Division Digital Multiplexer and TD-1065/G Data Buffer in the AN/TCC-72 to produce a 32 Kbps data rate. The AN/GRC-201 is a modified AN/TRC-97C which permits use of digital multiplexing and security equipment currently available or being developed. The modification consists of dipulse-compatible modulation and detection circuitry which will allow operation of 16 kbps, or 32 kbps channels as well as the capability to multiplex 12 channels of low speed data (45.5 to 9600 baud) not to exceed 30 kbps on a single 32 kbps channel. Channel capability will then be any mix of analog, 16 kbps or 32 kbps channels up to 24 channels or 32 analog, 16 kbps, or 32 kbps channels and 12 channels of low speed data. It is used in conjunction with the Terminal Set, Telephone AN/TCC-72. It will replace the AN/TRC-97C and -97E radio sets.

AN/MRC-134 RADIO TERMINAL SET

The AN/MRC-134 is a vehicular-mounted, VHF/FM, multichannel, analog radio. It provides one orderwire, four TTY, and four 3-KHz telephone channels between two terminals sets, utilizing the AN/VCC-1 Telegraph-Telephone Terminal. It has a range of 20 miles. The AN/MRC-134 is being phased out of the inventory and is being converted to the AN/MRC-135.

AN/MRC-135 RADIO TERMINAL SET

The AN/MRC-135 is a vehicular-mounted, VHF/FM, multichannel, analog radio. It provides two orderwire, eight TTY, and eight 3-KHz telephone channels between two terminal sets, utilizing the component AN/VCC-2 Telegraph-Telephone Terminal. It has a range of 20 miles.

AN/MRC-(139) RADIO TERMINAL SET

The AN/MRC-(139) is a HMMWV-mounted multichannel radio terminal set which will operate from fixed positions to provide voice and data communications over line-of-sight distances up to 35 miles. While the final design of the AN/MRC-(139) has not been determined, certain characteristics have been specified. The radio terminal will operate in the UHF (300 - 3000 MHz) Band, will provide 18 duplex channels, and will be able to handle digital data rates of 128, 256, and 512 kbps. Because of its UHF design, siting of the radio terminal will be much more critical than in the case of the AN/MRC-134/135 (VHF) multichannel radios which it is to replace. A fiber-optic applique is planned which will permit the interconnection of the separate channels of a fiber-optic multichannel cable with the separate channels of the AN/MRC-(139).

AN/TCC-72 (A) TELEPHONE TERMINAL

The AN/TCC-72 is a shelterized, secure, 24-channel, telephone, PCM, multiplex terminal. It provides terminal multiplex equipment that can be used over either radio or cable facilities. It is modified by the integration of a digital time division multiplexer, TD-1069/G. It will be used in combination with Radio Set AN/GRC-201 to provide 24 analog channels, or twenty-four 16/32 Kbps digital channels, or a mixture of these.

AN/TRC-97C, -97E RADIO SET

The AN/TRC-97 is housed in an S-308A shelter and is an SHF, troposcatter, radio set, using frequency and space diversity. It is designed to provide two-way transmission and reception of voice, digital data and TTY. A variety of RF power modes can be selected to achieve optimum operation in the 1 to 100 mile range with single links, using LOS and obstacle gain diffraction modes of propagation, as well as the troposcatter mode. Longer distances can be achieved with tandem links, using the AN/TRC-97 as a repeater station. The TTY multiplexer can be patched into any one of 12 VF channels (300 to 3500 Hz) to provide a capability of 16 TTY channels along with combinations of 11 voice/data channels. There are two models or configurations of the AN/TRC-97, including the AN/TRC-97C and the AN/TRC-97E. The AN/TRC-97C provides a 12 voice I/O channel capability, while the AN/TRC-97E provides a 24-channel capability. All AN/TRC-97Cs will be replaced by the AN/GRC-201. The AN/TRC-97E will remain in service until its eventual replacement by the AN/TRC-170.

AN/TRC-166 RADIO TERMINAL SET

The AN/TRC-166 is a VHF radio terminal set which provides voice and teletypewriter communications between two terminal sites. It provides four telephone channels (4 full-duplex, 2 or 4-wire, voice or data), four telegraph channels (full-duplex or half-duplex) and one orderwire circuit.

AN/TRC-170(V)3 TROPOSCATTER RADIO SET

The AN/TRC-170 is an SHF (4.4 to 5.0 GHz), troposcatter, radio terminal set being developed under the TRI-TAC program. It is housed in an S-250 shelter and will provide the capability for transmission and reception of digital voice, analog voice, quasi-analog and digital data signals. Operational modes include internodal trunking, remote subscriber access, subscriber access at relay, dedicated trunking and multi-trunking over LOS and troposcatter ranges of 0 to 100 miles. The voice orderwire (16 Kbps, half-duplex) is secured by a TSEC/KY-58 and the data orderwire (2 Kbps, half-duplex) is secured by a TSEC/-KG-84A. Analog loops (4-wire) are converted to digital by an analog (CVSD) applique unit. The AN/TRC-170(V)3 will replace the AN/TRC-97E and the AN/GRC-201.

AN/TSC-15 COMMUNICATIONS CENTRAL

The AN/TSC-15 is a shelterized, HF, radio system used to provide long-haul, multichannel communications at the MAF, MAB, DIV, MAW, and FSSG levels. It provides four voice channels or five teletype channels, or combinations thereof. It will be selectively replaced by the AN/TSC-95. The AN/TSC-15 is no longer in use in the active forces. It will remain in Marine Corps Reserve units until FY-88.

AN/TSC-95 COMMUNICATION SYSTEM

The AN/TSC-95 will provide more efficient and reliable, long-haul, HF communications (0-12,500 miles) for a deployed MAGTF. Developmental efforts in the areas of high-speed data modems and time-diversity modems ensure that either the 2400 baud AN/TYC-5A Mobile Data Communications Terminal or lower speed teletypewriter circuits can be accommodated with significant performance improvement over the AN/TSC-15. The AN/TSC-95 consists of two S-280 shelters; one shelter is designated the AN/TRC-171 Communication Central (containing HF radio transmission and reception equipment) and the other shelter is designated the AN/TGC-46 Teletypewriter Central (containing teletypewriter and

teletype multiplexing equipment). The AN/TSC-95 will provide the capability for one secure-voice and two full-duplex, TTY channels. It replaces the AN/TSC-15 in some mobile-command applications.

AN/TSC-120 HIGH FREQUENCY COMMUNICATION CENTRAL (HFCC)

The HFCC operating system configuration is envisioned as a self-contained, stand-alone communications central for the Marine Air Ground Task Forces (MAGTF). It consists of the HFCC as the major component with a prime mover for transportability and an equipment trailer for power sources and other associated equipment. It will also include adequate spare parts, fuel, and a three man operating team capable of sustained operation in the field without external logistics support for a 24 hour period. Logistics support thereafter must be made available to assure continuous operation of the system for the MAGTF. The HFCC will be used primarily for long-haul, point-to-point communications within any area of tactical operations or to distant, fixed communications stations. It may be used for BLOS communications between units ashore and amphibious command and control elements afloat. In addition, it may also be used as an HF terminal for air command and control TADIL-A data links, and for shore-based data, voice and record traffic terminal systems. Follow-on product improvements to the HFCC can provide HF ECCM capabilities and may also provide an interface to Theater Nuclear Force Communications System. The HFCC will also be utilized as a supplementary or alternative link for UHF, SHF and EHF satellite systems connectivity from the air combat element (ACE) headquarters to subordinate air bases and air command and control agencies. It will serve as a primary long-haul and BLOS communications means for deployed Marine Amphibious Units (MAUs), Marine Amphibious Brigades (MABs) and other air deployed Marine forces. Besides the high frequency transmitting and receiving equipment, the HFCC will also include speech and record cryptographic equipment and the record traffic terminal, AN/UGC-74A(V)3. The HFCC eventually will replace the AN/TSC-95. The Marine Corps will purchase 92 HFCC's, with first deliveries in FY91 and final delivery in FY93.

MD-700C-6 DATA MODEM

The MD-700C-6 is a full-duplex, synchronous modulator/demodulator. It provides TADIL-B operation at 1200 and 600 bps.

MD-701/C DIGITAL DATA MODEM

The MD-701/C is a full-duplex, synchronous modulator/demodulator. It transmits and receives serialized digital data at speeds of 600, 1200, or 2400 bps, over a standard 3 KHz voice channel. It accepts and provides data signals that meet RS-232A and MIL-STD-188B interface requirements, and has an extremely-low error rate. The MD-701/C is a component of the AN/TYC-5A.

MD-1023( )/G CABLE DRIVER MODEM

The MD-1023( )/G is used in shelters and vans to provide for cable transmission using repeaters. It provides power to the TD-1218( )/G Pulse Restorer, and is used to locate faulty restorers in the cable system. It has a range of up to 1.6 km over CX-11230 cable without repeaters and provides power for a 64 km cable system when used with the TD-1218( )/G. It accepts bit rates of 72 Kbps to 2,048 Kbps and provides for transmission of analog voice, digital voice and data orderwires. Orderwires include: 16 Kbps secure voice (TSEC/KY-

57/58); 2.0 Kbps telemetry; maintenance, analog. Developed under the TRI-TAC program (DGM family), the MD-1023( )/G is a component of the AN/TRC-170(V)3 and AN/TTC-42.

MD-1026( )P/G DIGITAL DATA MODEM

The MD-1026( )P/G is used in shelters and vans to accept balanced NRZ group signals and convert the signals to conditioned diphase, dipulse or bipolar. Using CX-11230 cable, it has a range of 3.2 km (without repeaters) at 0.576 Mbps, 1.6 km at 2.304 Mbps, 0.8 km at 4.608 Mbps, and 0.5 km at 4.9152 Mbps. Orderwires include: diphase 16 Kbps digital voice, 2 Kbps telemetry, and maintenance (analog); dipulse and bipolar maintenance (analog). The MD1026( ) P/G is a component of the AN/TRC-170(V)3.

MD-1061(V)1/USC DIGITAL DATA MODEM

The MD-1061(V)1/USC is a full-duplex, data modem for digital data transmission over HF radio circuits. It incorporates variable degrees of inband-diversity combining at lower data rates, and time-diversity combining at the higher data rates. A dual-channel diversity capability is also provided which can be used with either space or frequency-diversity receivers, in combination with inband diversity. It includes a multiple-input buffer which can multiplex and demultiplex up to four independent, variable, data rates into a single 2400 bps stream. The MD-1061(V)1/USC is a component of the AN/TSC-95.

MD-1065( )P/G DIGITAL DATA MODEM

The MD-1065( )P/G provides unbalanced, NRZ, signal data for radio set transmission, and provides the inverse function for signal data received from radio sets. Special features include; built-in test functions, (to measure, test, and monitor signals in and out of the unit), go-no-go fault locator circuitry (to isolate circuit card failures), failure alarm indicator (for loss of power, channel and inter-unit signal malfunction), and a 2 Kbps telemetry input/output. It is designed to be rack-mounted and shelterized. The MD-1065( )P/G provides EUROCOM modem input/output rates of 256 and 512 Kbps, AN/GRC-103 input/output rates of 640 and 1280 Kbps, and a digital input/output rate of 16 Kbps.

MD-1067/GRC-201 MODULATOR-DEMODULATOR

The MD-1067/GRC-201 transmits and receives 12/24-channel, PCM signals in a format identical to that of the TD-660A/G and TD-754/G. The transmit mode receives diphase data from the AN/TCC-72 Telephone Terminal and converts it to 1152 Kbps PCM data for the radio set transmitter. The receive mode takes PCM data from the radio set receiver and converts it to diphase data for cable transmission to the AN/TCC-72. It is a component of the AN/GRC-201 radio.

TD-660A/G MULTIPLEXER

The TD-660A/G combines (multiplexes) 6/12-channel audio signals into a time-division-multiplex (TDM), pulse-code-modulated (PCM) signal for subsequent transmission (by other equipment) via CX-4245 or CX-11230 cable. It also recovers the 6/12-channel audio signal from the TDM/PCM signal on the receive side. Secure communications can be provided when used in conjunction with the TSEC/KG-27. Two TD-660A/Gs can be used with the TD-754/G to provide a 24-channel capacity. The TD-660A/G is a component of the AN/GRC-201, AN/TSC-85A and AN/TSC-93A radios.

TD-754/G MULTIPLEXER

The TD-754/G is used at cable terminals or attended-repeater locations in a multiplex system. It is used to condition the input/output signal from a TD-660A/G multiplexer for cable transmission, and to provide the necessary cable current for the operation of pulse restorers. It is also used at radio-to-cable repeater locations to condition signals to and from the radio portion of the link, for subsequent transmission via cable. It has the capability to handle 6, 12, 24 or 48-channel operations. It also provides orderwire facilities which are independent of PCM operations. The TD-754/G replaces the TD-204/U in some applications. The TD-754/G provides power for unattended cable repeaters. It contains an orderwire facility and provides for fault-isolation on cable. The TD-754/G is a component of the AN/GRC-201, AN/TSC-85A, and AN/TSC-93A radios.

TD-1065/G DATA BUFFER

The TD-1065/G provides digital access of high-speed data and/or wideband secure-voice traffic, at 16/32 Kbps bit-rates, to the TRI-TAC digital automatic circuit switch system. It provides a low-rate input/output of 12 channels (2 wire/4 wire mix) of 16/32 Kbps diphase data, and a high-rate input/output of 576 Kbps binary data. It is used in conjunction with the TD-660A/G multiplexer. Digital signals will be inserted into or separated from the 576 Kpbs digital stream of the associated TD-660A/G. Analog signals will pass to the TD-660A/G and be converted to PCM. The TD-1065/G is a component of the AN/GRC-201, AN/TSC-85A, and AN/TSC-93A radios.

TD-1069/G DIGITAL TIME DIVISION MULTIPLEXER

The TD-1069/G provides twelve 32 Kbps digital channels, with both a transmit and receive capability. The transmit section multiplexes up to 12 channels of conditioned diphase or teletype data, with an aggregate data-rate of 30 Kbps, into a single serial 32 Kbps data stream. The receive section demultiplexes and regenerates data simultaneously with the same format as the transmit section. It performs digital-to-FSK and FSK-to-digital conversions. The TD1069/G is a component of the AN/TSC-85A and AN/TSC-93A radios. It may also be a component of the AN/GRC-201 radio.

TD-1218( )/G PULSE FORM RESTORER

The TD-1218( )/G is an unattended cable repeater which is used in exposed locations in the field for detection and regeneration of received, conditioned-diphase signals. It has an analog maintenance orderwire capability and a range of 1.6 km between restorers over CX-11230 cable. The TD-1218( )/G is being developed under the TRI-TAC DGM Family. It is a "stand-alone" item.

TD-1234( )/TTC REMOTE MULTIPLEXER-COMBINER (RMC)

The TD-1234( )/TTC will be used in the field in exposed locations, in shelters and vans. Its primary functions are time-division-multiplexing of loops (16/32 Kbps digital channels) into a loop-group and the combining of a loop-group with the group output from another unit (to form a higher-capacity group). It has a range of 3.2 Km without repeaters using CX-11230 cable. A TRI-TAC DGM development, the TD-1234( )/TTC is a component of the AN/MRC-139 radio. However, the AN/MRC-139 design is not yet firm; the final revision may not include the TD-1234( ).

TD-1235( )/TTC MULTIPLEXER

The TD-1235( )/TTC will time-division multiplex sixteen 16/32 Kbps, digital channels (loops) into a single loop-group, and demultiplex a digital group into its constituent loops. One channel (2 Kbps) is allocated for overhead (non-traffic) functions, such as framing pattern and telemetering data for SYSCON. The TD-1235( )/TTC can power and multiplex 8, 9 or 16 Digital Subscriber Voice Terminals (DSVTs), with power supplied to the telephones via a phantom loop. It is designed for shelterized use and is being developed under the TRI-TAC DGM program. The TD-1235( )/TTC is a component (2 each) of the AN/TRC-170(V)3 radio.

TD-1236( )/G GROUP MULTIPLEXER

The TD-1236( )/G will operate as a synchronous combiner/decombiner for 4-wire, full-duplex, group input into and from a super-group. The data-rate for groups ranges from 72 Kbps to 2304 Kbps, with a super-group range of 128 Kbps to 4608 Kbps. A 2 Kbps telemetry sub-channel is provided for SYSCON. The TD-1236( )/G is designed for use in shelters and vans. It is being developed under the TRI-TAC program (DGM family). The TD-1236( )/G is a component of the AN/TRC-170(V)3.

TS-3647( )/G CABLE ORDERWIRE UNIT (COU)

The COU is a field-transportable test set for TRI-TAC cable systems. It is used to check power-feed and input/output signals at repeaters. It provides an analog orderwire termination for communications from remote loop-group multiplexer (RLGM), remote multiplexer combiner (RMC), or repeater to TRI-TAC assemblages.

SINGLE-CHANNEL TRANSMISSION EQUIPMENT

AN/VRC/PRC-(SINCGARS) RADIO SET, FAMILY

The AN/VRC/PRC-(SINCGARS) Single-Channel Ground Air Radio System will be the new portable, mobile, VHF/FM equipment. It will contain a standard receiver transmitter (R/T) unit which may be configured for portable, vehicular or aircraft installation, using appropriate ancillary equipments. The AN/VRC/PRC-(SINCGARS) will have integrated COMSEC and ECCM capabilities. This family of VHF radios will be employed at each tactical unit in the landing force for participation in the various VHF nets. The manpack version has a range (voice) of 8 km, while the vehicular version has a range of 35 km, utilizing slow frequency-hopping. It will replace the AN/VRC-12 family of radios. The following table illustrates the configuration of different models, operational use, and specific radios to be replaced.

Model	R/T	40 Watt PA	Operational Use	Replaces
AN/PRC-119	1	0	MANPACK	AN/PRC-77
AN/VRC-88	1	0	MANPACK & VEHICLE	AN/GRC-160 & AN/PRC-77
AN/VRC-89	2	1	VEHICLE	AN/VRC-12/47
AN/VRC-90	1	1	VEHICLE	AN/VRC-43/46
AN/VRC-90	1	1	VEHICLE	AN/VRC-44
AN/VRC-91	2	1	VEHICLE (LAV)	NEW REQUIREMENT
AN/VRC-92	2	2	VEHICLE	AN/MRC-110, VRC-45/49

NOTE: Radio set AN/ARC-182 (VHF and UHF), equipped with HAVEQUICK, is in use in most Marine Corps tactical aircraft. A later version of the AN/ARC-182, not yet procured by the Naval Air Systems Command, will also include a SINCGARS capability.

AN/GRC-112 RADIO SET

The AN/GRC-112 is a UHF ground-to-air transceiver used in fixed locations. It is capable of handling voice or FSK data in either simplex or duplex mode. It is used as a component of the AN/TYA-11 and AN/TYA-12. The AN/GRC-112 is being replaced by the AN/GRC-171.

AN/GRC-125 RADIO SET

The AN/GRC-125 is an AN/PRC-25 radio plus the components for vehicular operation, using a 1/4-ton M151A2 truck. It provides short-range, VHF/FM, half-duplex, radio communications. The AN/GRC-125 is being phased out of service.

AN/GRC-134 RADIO SET

The AN/GRC-134 is a self-contained, ground-to-air, UHF, communications transceiver used in fixed location. Tuning is automatic on manual selection of the operating frequency. It is a component of the AN/TYA-11 and AN/TYA-12. The AN/GRC-134 is being replaced by the AN/GRC-171.

AN/GRC-135A RADIO SET

The AN/GRC-135A is a self-contained, UHF, communications transceiver used in fixed installations. It automatically tunes to any of the available channels upon manual selection of the desired operating frequency. The AN/GRC-135A is similar to the AN/GRC-112 except in equipment cabinet configuration. The electrical equipment rack includes a compartment for mounting secure-voice equipment. The AN/GRC-135A is being replaced by the AN/GRC-171.

AN/GRC-160 RADIO SET

The AN/GRC-160 is a replacement for the AN/GRC-125A, with RT-841/PRC-77 substituted for RT-505/PRC-25. The set has the same ancillary components and can operate with speech-security equipment. It is used as a portable radio or installed in tactical vehicles.

AN/GRC-171A(V)2 RADIO SET

The AN/GRC-171A(V)2 is a state-of-the-art UHF transceiver, which is remotely tunable. It is the replacement for the AN/GRC-112, AN/GRC-134 and AN/GRC-135A radios. It has an output power of 20 watts/50 watts (AM/FM respectively), and will be used for voice and data communications between ground units and aircraft in flight. It will be employed at the Tactical Air Command Center (TACC), the Direct Air Support Center (DASC) and the Tactical Air Operations Center (TAOC). It can be remotely controlled and provides AM narrowband, AM wideband, FM narrowband, and FM wideband (TADILs A & C) data communications over any one of 7000 channels.

AN/GRC-193 RADIO SET

The AN/GRC-193 is an HF SSB transceiver designed for shore installations. The AN/GRC-193 uses the same receiver-exciter as the AN/PRC-104, but has a 400 watt RF power amplifier and an automatic antenna tuner capable of handling the higher power. It is a replacement for the AN/TRC-75 radio set.

AN/MRC-83A RADIO SET

The AN/MRC-83A is a mobile, HF, SSB radio providing long-range communications. It consists of a radio set and ancillary equipment mounted on a 1/4-ton M151A2 Truck. The AN/MRC-83A has been replaced by the AN/MRC-138.

AN/MRC-110 RADIO SET

The AN/MRC-110 is a truck-mounted AN/VRC-49 radio set which provides two-way, VHF/FM, transmission and reception. Two receiver-transmitters provide the capability for either monitoring two channels simultaneously, transmitting on two channels simultaneously, or monitoring on one channel while transmitting on another. It operates in clear and secure-voice modes. It has 920 channels, 50 KHz channel-spacing, 35 watts power output, and a range of 20 miles in stationary operation.

AN/MRC-123 VEHICULAR RADIO

The AN/MRC-123 is a two-way, HF, mobile, communications unit which can interface with COMSEC equipment to provide secure communications. It consists of an HF radio set (and ancillary equipment) mounted on a 1/4-ton M151A2 truck. The AN/MRC-123 is in use only in the Marine Corps Reserve and will be completely replaced by Radio Set AN/MRC-138 during FY88.

AN/MRC-124 RADIO SET

The AN/MRC-124 is a two-way, HF/UHF, mobile, communications unit which can interface with COMSEC equipment to provide secure communications (using UHF transceiver). It consists of an HF radio set (RT-671/PRC-47), a UHF radio set (RT-695A/PRC-41), plus ancillary equipment, mounted on a 1/4-ton M151A2 truck. The AN/MRC-124 is in use only in the Marine Corps Reserve and will be completely replaced by Radio Set AN/MRC-138/UHF during FY88.

AN/MRC-138 RADIO SET

The AN/MRC-138 is an HF, single-sideband (SSB), mobile, communications set. It consists of an AN/GRC-193, mounted on a 1/4-ton M151A2 truck. It is a replacement for the AN/MRC-83A, and is compatible with TSEC/KY-65, AN/GRC-193, AN/PRC-104, AN/TSQ-84( ), and CV-3591 (ANDVT). It has a maximum RF output of 400 watts, with 100 Hz channel-spacing.

AN/MRC-138/UHF COMMUNICATIONS CENTRAL

The AN/MRC-138/UHF is a complete, two-way, secure, communications system for long-distance, point-to-point and ground-to-air communications in the HF and UHF frequency range. Currently the UHF component of this communications central is the AN/VRC-85 whose principal part is the RT-695A/PRC-41A which, in turn, is to be replaced by the AN/VRC-83 in FY87. It replaces the AN/MRC-124.

AN/PRC-41A RADIO SET

The AN/PRC-41A is a portable, UHF, receiver-transmitter for ground-to-air communications. A second, fixed-tuned receiver is incorporated in the set to permit monitoring of a pre-determined guard channel in the 238 to 248 MHz range. It is adaptable to vehicular or fixed installations with Accessory Kit MK-706/RT-695.

AN/PRC-68 RADIO SET

The AN/PRC-68 is a portable, handheld VHF/FM transceiver providing clear or secure, short range communications. COMSEC is available with the application of the TSEC/KYV-2 Secure Voice Module.

AN/PRC-75A RADIO SET

The AN/PRC-75A is a hand-held, UHF transceiver with an approximate operating range of 1/2 mile (with the short antenna) or 3 miles (with the AT-892 antenna). It is used for Forward Air Control (FAC) and general ground-to-air communications. It replaced the AN/PRC-41 in the manpack configuration.

AN/PRC-77 RADIO SET

The AN/PRC-77 is the primary radio set used by tactical units. It is a portable, VHF/FM radio set that provides communications at distances up to five miles (with whip antenna) or in excess of twenty-five miles (using groundplane or directional antenna). Voice and X-mode I/O bandwidths are 300-3500 Hz and 10-20,000 Hz, respectively. It is compatible with wideband voice security equipment. It replaces the AN/PRC-25.

AN/PRC-94(V)1 RADIO SET

The AN/PRC-94(V)1 is a portable, hand-held radio which transmits and receives VHF/FM voice communications in the 132 to 150.8 MHz range. It has a power output of 2.2 watts.

AN/PRC-104 RADIO SET

The AN/PRC-104 is a portable, HF, SSB radio. It replaces the AN/PRC-47 and uses the same receiver-transmitter (RT-1209/URC) as the AN/GRC-193. It has a power output of 20 watts. Output can be boosted to 100 watts using Amplifier Coupler AM-6905, and to 400 watts using Amplifier AM-6545/GRC-193. The U.S. Army has begun a short-term anti-jam (STAJ) program in which the Marine Corps is an active member. The STAJ effort will result in a modification to the AN/PRC-104, AN/GRC-193, and AN/MRC-138 which will permit frequency hopping ECCM.

AN/PRC-113 RADIO SET

The AN/PRC-113 is a VHF/UHF radio used for ground-to-air communications for close air support missions. It has an operator-selectable power-output of 2/10 watts (VHF/UHF respectively) and will be employed primarily by the Forward Air Control Party and the Landing Zone Control Party. The AN/PRC-113 operates in the 116-147 MHz (VHF) range and in the 225-400 MHz (UHF) range. It is compatible with the TSEC/KY-57 in baseband and has automatic narrowband/ wideband switching capability.

AN/TRC-171 HIGH FREQUENCY RADIO CENTRAL

The AN/TRC-171 is a high-frequency, transmit and receive shelter (S-280) which utilizes standard Navy equipment. It is a component of the AN/TSC-95, but it can also be operated independently as a non-secure voice and CW communications terminal.

AN/VRC-12 RADIO SET, FAMILY

The AN/VRC-12 is a family of VHF radio sets designed for general tactical use in vehicular, fixed, and portable applications. The AN/VRC-12 family consists of Radio Sets AN/VRC-12, AN/VRC-43, AN/VRC-44, AN/VRC-45, AN/VRC-46, AN/VRC- 47, AN/VRC-48, AN/VRC-49, AN/GRC-125, AN/GRC-160, AN/MRC-109, and AN/MRC-110. Of these, the AN/GRC-125 is being phased out of service, the AN/MRC-109s are being converted to AN/MRC-110s, and the entire family is due to be replaced by SINCGARS equipment.

AN/VRC-82(V)2 RADIO SET

This single-channel, vehicular-mounted, radio set transmits and receives FM signals in the 138 to 155 MHz (VHF) frequency range. It has 35 watts output power and 25 KHz channel-spacing.

AN/VRC-83 RADIO SET

The AN/VRC-83 is the vehicular version of the AN/PRC-113 radio. It operates in the 116-to-150 MHz (VHF) and 225-to-400 MHz (UHF) ranges. It has 25 KHz channel-spacing, can be operated in full-remote mode, and has an RF power output of 2, 10, or 30 watts. In addition to the basic RT-1319 receiver transmitter, the AN/VRC-83 also consists of an integral audio amplifier, companion speaker, 30-watt linear power amplifier, power cable and handset. The AN/VRC-83 and AN/PRC-113 radios are compatible. The AN/VRC-83 will replace the AN/VRC-85.

AN/VRC-85 RADIO SET

The AN/VRC-85 will provide UHF/AM, voice communications using Receiver-Transmitter RT-695A. It is a vehicular system, with 100 KHz channel-spacing and 3 watts power output. Secure voice is obtained utilizing TSEC/KY-38. The AN/VRC-85 will be replaced by the AN/VRC-83.

TERMINAL DEVICES

AN/GGC-3A TELETYPEWRITER REPERFORATOR SET

The AN/GGC-3A provides two-way transmission of TTY signals either from a keyboard or from a tape transmitter. Received signals are printed or perforated on 7/8 or 11/16 inch tape. It operates half-duplex or full-duplex, at speeds of 60, 66, 75 or 100 WPM, with 5-level baudot code (7.42-unit).

AN/GXC-7A FACSIMILE

The AN/GXC-7A transmits and receives facsimile information over digital or analog wireline and radio circuits. It operates over any voice or 2.4/4.8 Kbps digital circuits. The AN/GXC-7A interfaces include clear/secure VHF/FM (voice, x-mode) and HF/SSB (voice) radio, secure multichannel (voice) radio, WD-1 field wire, and telephone networks (acoustic coupler) such as DDD and AUTOVON. Output signals are analog (DC to 1250 Hz baseband; 1500 Hz = white and 2,430 Hz = black, FM) and digital (2.4/4.8 Kbps external clock synchronized MIL-STD-188C). The AN/GXC-7A can handle eight shades of grey or black and white images. Transmission time for an 8-1/4 x 11 inch document takes a maximum of six minutes. A new version of the AN/GXC-7A has been developed which will transmit a single page in less than 15 seconds at 16 kbps. The new version is the AN/UXC-7; the Marine Corps is purchasing a quantity on a U.S. Army contract.

AN/MSC-63 COMMUNICATIONS CENTRAL

AN/MSC-63 is a two-circuit, full-duplex, encrypted, teletype terminal designed to handle FMF Defense Special Security Communications System (DSSCS) circuits. It has no provision for radio frequency (RF) path. Support communication organizations must supply RF links, using the AN/MRC-138, AN/MRC-135, AN/GRC-201, AN/TRC-97, or AN/TSC-95. Two cryptographic sets are used with the AN/MSC-63; either two TSEC/KW-26s or two TSEC/KW-7/KWX-11s, or one of each. Two AN/GRR-17 receivers are provided for fine tune capability; however, failure of either or both receivers will not deadline the AN/MSC-63. It is used in support of intelligence systems, such as the MAGIS IAC and ISIS, and is compatible with the circuit switch system. An upgraded version of the AN/MSC-63 will be introduced as the AN/MSC-63A which will be configured to provide six full-duplex and two receive only, secure, communications channels. In addition, it will provide the capability to remote eight operating positions for external message-handling, and one telephone-access circuit The AN/MRC-63A will have two separate applications, one to provide special security communications, and the other to provide general service communications. Hardware in both applications will be essentially the same; only the software will be unique to each. The general service communications version of the AN/MSC-63A will replace the AN/TYC-5A(V) and the AN/TGC-37(V). The special security communications version of the AN/MSC-63A will replace the AN/MSC-63. Components of the AN/MSC-63A are:

Data Processing Set (AN/UYK-44(V))	2
Signal Data Recorder Reproducer Set (AN/USH-26)	1
Signal Data Recorder Reproducer Set (RD-397B(V3))	1
Communications Terminal (AN/UGC-74(V)3)	3
Data Terminal Set (AN/USQ-69(V))	2

High Density Mass Storage Disc (RDS-4502)	1	
Multiplexer (TD-1089/UYQ-4)	1	
Digital Data Modem (MD-701C/UY)	2	
Dedicated Loop Encryption Device (TSEC/KG-84A)	8	
VALLOR Digital Broadcast Security Equipment (TSEC/KWR-46)	2	(SSCC only)
Digital Subscriber Voice Terminal (TSEC/KY-68)	2	
Shelter ISO 8X8X10 feet	1	
Time Diversity Modem (MD-1142)	1	

AN/PSC-2 DIGITAL COMMUNICATIONS TERMINAL (DCT)

The Digital Communications Terminal is a lightweight, handheld, communications message processor which provides the Marine in the field with point-to-point and netted communications using a variety of military radio, wire, and cryptographic equipment. The DCT is operator interactive with a touch sensitive LED display for composition and readout of fixed format messages, variable format messages, and graphic displays. The DCT will be used by forward air controllers, artillery forward observers, forward area air defense Redeye/Stinger gunners and reconnissance teams.

AN/TGC-37(V) COMMUNICATIONS CENTRAL

The AN/TGC-37(V) is a shelterized, 6-position, AUTODIN (Mode II), torn-tape relay for record traffic. It consists of teletypewriters, reperforation paper-tape units, and paper-tape transmission units. It provides an on-line, encrypted, full-duplex, teletype capability (with 6 circuits). It interfaces with 2-wire or 4-wire MIL-STD-188c circuits. There are no automatic error correction and channel controls. Message accountability is maintained through channel sequence numbers and service message actions.

AN/TGC-46 TELETYPEWRITER CENTRAL

The AN/TGC-46 provides a landing force commander with the capability of Fleet Marine Force (FMF) mobile command termination with a Naval Communication Station. The teletypewriter shelter is capable of terminating two secure, full-duplex, 100-words-per-minute circuits. The equipment includes: a multiplexer, a converter, page printers, reperforators, teletypewriters, and COMSEC units. The AN/TGC-46 can be used as an independent teletypewriter terminal, but normal employment is with the Communications Central AN/TRC-171 as a component of Communications System AN/TSC-95.

AUTOMATED DATA PROCESSING EQUIPMENT - FMF/COMMUNICATIONS MESSAGE PROCESSOR ADPE-FMF/CMP

A combination of the ADPE-FMF (IBM 4110) computer and the Terminal, Communications AN/UGC-74 is being designed by the Development Center, MCDEC, to function as a Mode I AUTODIN terminal for narrative messages, only. The present Marine Corps transportable AUTODIN terminal is the AN/TYC-5A, to be replaced by the Tactical Communications Center (TCC) AN/MSC-63A in FY91. While the AN/TYC-5A and the AN/MSC-63A are shelterized equipments, the ADPE-FMF/CMP is not. Therefore, the ADPE-FMF/CMP combination, to be available in early FY88, may be used for AUTODIN terminations in situations which prohibit the use of shelterized terminals. Seventeen systems, each with two IBM 4110s and two AUTODIN interface units, are planned.

AN/TPB-1D RADAR COURSE DIRECTING CENTRAL

The AN/TPB-1D is a computer-controlled, all-weather, bombing system consisting of Radar Set Group OY-70/TPB-1D and Data Processing Group OA-9003/TPB-1D. The data-processing group incorporates an AN/UYK-19 computer for processing mission-parameter and target-data inputs, and for generating guidance signals for aircraft control. The AN/TPB-1D is housed in a field-transportable shelter, with a towable assembly. It has a skin range of 50-plus nautical miles and a beacon range of 200-plus nautical miles.

AN/TYC-5A(V) DATA COMMUNICATION TERMINAL

The AN/TYC-5A(V) is a shelterized, AUTODIN (Mode 1) terminal. It provides secure, 600/1200/2400 bps, full-duplex operation with automatic error and channel controls. It allows independent and simultaneous two-way operation. Control characters are used to acknowledge receipt of valid line-blocks and messages or to return error information to an AUTODIN switch or other Mode 1 terminal. The AN/TYC-5A(V) includes an AUTODIN interface unit which provides control and coordination between the AUTODIN tributary line and the input/output devices. It also includes a Magnetic Tape capability; a Card Reader/Punch subsystem, which reads and punches 80-column Hollerith cards containing the transmitted and received message traffic; a Paper Tape Reader/Punch, which reads and punches 5- and 8-track paper containing the transmitted/received message traffic; and a printer subsystem, which simultaneously prints selective hard copy of all message traffic.

AN/UGC-74A(V)3 COMMUNICATIONS TERMINAL

The AN/UGC-74A(V)3 is a ruggedized teleprinter which provides users with an on-line capability to interface with the unit level message switch or the transmission system. It consists of a keyboard, printer, processor and memory. The unit can store up to ten pages (16,000 characters) of data and provides prompting/editing features to facilitate original message composition. It provides for ASCII (up to 1200 baud) or baudot (up to 75 baud) full-duplex operation, and communications interface with conditioned diphase or NRZ signals. It has an average printing speed of 120 characters per second. A product improvement is in preparation which will convert the AN/UGC-74A to the AN/UGC-74C. This conversion will add a new keyboard to which may be attached a 7.5 cubic inch box containing a "bubble" memory, thus providing a message storage capacity of 75 pages. Additionally, the AN/UGC-74C version can act as a relay terminal with up to 16 other AN/UGC-74s while simultaneously and independently maintaining its own principal duplex circuit.

CV-3333/U AUDIO DIGITAL CONVERTER

The CV-3333/U, is a 4-wire, digital, voice analyzer/data converter, which provides digitized-speech output at a data rate of 2400 bps. It will operate over standard voice quality circuits in half-duplex or full-duplex configurations. The CV-3333/U may be operated locally (with the integral handset) or remotely. It can be rack-mounted or free-standing. When used with the proper COMSEC devices, it will allow both netted secure-voice or AUTOSEVOCOM entry via satellite. Connectors are provided for use with an external multiplexer or modem. The audio bandwidth is 200 to 3450 Hz and the digital interface is MIL-STD-188C, low-level. It is a component of AN/TSC-96(V) satellite system, and can be remoted up to 500 feet from the OL-188(V)/TSC-96(V) shelter.

OL-188(V)/TSC-96(V) DATA PROCESSING GROUP

The OL-188(V)/TSC-96(V) is a shelterized, tactical, equipment configuration comprised of NAVMACS A+ remote-control units, crypto and ancillary equipment, and a removable secure-voice module (CV-3333/U). It automates many functions of message processing, including broadcast screening, storage and retrieval, internal routing, logging and journalling. The OL-188(V)/TSC-96(V) provides processing equipment for screening up to four fleet broadcast channels, received via conventional or satellite RF paths. It also accesses one channel of the FLTSATCOM Common User Digital Information Exchange System (CUDIXS), for processing of outgoing messages, and accesses one channel of the FLTSATCOM Secure Voice Subsystem. The secure-voice module is designed for removal from the shelter and remote use (up to 500 feet) at a suitable location. The OL-188(V)/TSC-96(V) is a component of the AN/TSC-96(V) SATCOM Communication Central. It contains no RF transmission equipment, but utilizes the OZ-46/-TSC-96(V) Radio Set Group to obtain access to RF paths.

QUERY RESPONSE UNIT (QRU)

The QRU processes digital-data traffic for MAGIS. These devices operate in conjunction with a computer and are located in the IAC and II shelters. The QRU contains interactive displays and keyboards and is used to generate messages and reports, retrieve references or tasking data, and to present task oriented operating instructions.

TA-312/PT TELEPHONE

The TA-312/PT is an analog, 2-wire, field telephone organic to most tactical units. It operates on local battery or common battery provided by the switchboard. Ringing current is provided by a self-contained 20 Hz generator. The bandwidth is 300 to 3200 Hz and the impedance is 600 ohms at 1 KHz.

TA-838( )/TT TELEPHONE

The TA-838( )/TT is an analog, DTMF, 2-wire/4-wire, solid-state, ruggedized set. When in the 4-wire mode of operation, the telephone is capable of using ac (in-band frequency) or dc supervisory signaling, and dual-frequency signaling. In the 2-wire mode, it is capable of supervisory and dual frequency signaling. A digit key-sender (4x4) provides digits 0 through 9, with two additional keys that are used when conducting conference calls or recall. The recall key alerts the operator if depressed while a call is in progress. Four additional keys (FO, F, I AND P) provide a four-level precedence capability. The bandwidth is 300 to 3500 Hz and the impedance is 600 ohms (nominal).

TA-938/G TELEPHONE

The TA-938/G is a commercial (WECO-2500), 2-wire, DTMF, analog telephone with a 4x3 key-sender. It is technically similar to the TA-838( )/TT except that it can only be used in the common-battery (CB) mode.

TA-954( )/TT DIGITAL NONSECURE VOICE TERMINAL (DNVT)

The DNVT will be utilized with the TRI-TAC family of switches to provide a digital non-secure complement to the DSVT. The TA-954( )/TT is ruggedized for use in a military field environment. The transmission and information rates are 16 or 32 Kbps, with conditioned diphase modulation and CVSD voice

processing. The 4-wire loop interface consists of a transmit pair and a receive pair which carry digital signals and provide the dc phantom path for common battery power. A digital key-sender (4x4) provides 0 through 9 digit keys, 4 precedence keys, a conference key and a recall key. The DNVT can operate in the full-duplex or half-duplex mode. A push-to-talk control is provided in the handset for half-duplex operation. The DNVT to DNVT/DSVT range is 4 km over WF-16 wire. The DNVT replaces the TA-938/G, TA-838( )/TT, and TA-312/PT.

TH-85/GCC TELEGRAPH-TELEPHONE TERMINAL

The TH-85/GCC connects TTY terminals to a voice-frequency (VF) channel of a multiplexer terminal for use with narrowband transmission systems. It provides FSK modulation and demodulation. The TH-85/GCC connection with the TTY terminal is 2-wire, half or full-duplex, with transmission rates of 60 or 100 WPM. The VF-loop connection is 2-wire, with 600 ohms impedance at 1 KHz and 15,000 ohms impedance at 16-25 KHz. The signal frequencies on the VF loop may be switched through 2-wire, telephone switchboards.

TECHNICAL AND SYSTEM CONTROL EQUIPMENT

AN/TRQ-35 TACTICAL FREQUENCY MANAGEMENT SYSTEM (TFMS)

The AN/TRQ-35 is designed to display, as fully as technically possible, the tactical propagation and occupancy environments in the HF frequency band. It performs spectrum analysis and accumulates channel statistics on 9333 channels in the 2 to 30 MHz frequency range, to determine the best available channel for any one of the system users. Channel-spacing is 3 KHz and the analysis bandwidth (3 dB) is 6 KHz. It monitors USB, LSB, or AM transmission modes with 12 KHz (from indicated center frequency) monitor-tuning. A 5-inch refresher CRT screen provides spectrum analysis and channel-statistics bar-graph displays. The display formats include: "current", giving most recent threshold during current 5-min block; "last 5 min", giving percent of time threshold crossed in last 5-min block; and "last 30 min", giving percent of time each threshold crossed in last 30 min. The display frequency range is selectable between 100 KHz (33 channels) and 500 KHz (167 channels).

AN/TSQ-84( ) COMMUNICATIONS TECHNICAL CONTROL CENTER

The AN/TSQ-84 is the coordination center for most analog, technical, communications-control actions and is used to continually monitor, test, reassign and restore circuits. Thirty-six of the signal connectors are associated with the switchboard side (local or loop side). The remaining thirty-six connectors are associated with the multiplexer side (transmission side). Each signal connector provides for twelve four-wire circuits resulting in 432 loop circuits and 432 line circuits. In addition, there are two signal connectors on the rear of the shelter which can be used to increase the capacity by 24 circuits. All of the circuits make an appearance at the main distribution frame (MDF), the monitor test panel, and the rapid-patch panel. The AN/TSQ-84( ) incorporates the following line conditioners: 18 two-wire amplifiers, 48 two-wire attenuators, and 4 delay equalizers.

SATELLITE EQUIPMENT

AN/PSC-3 PORTABLE UHF SATCOM RADIO

The AN/PSC-3 is a tactical, manpack, UHF, satellite, radio terminal that permits half-duplex, burst communications via the AFSATCOM I transponder of FLTSATCOM (and other satellites designated to have the AFSATCOM I transponder and LES 8/9). It is also capable of operating in the line-of-sight (LOS) mode. The backpack radio set provides two-way, half-duplex, satellite communication for digital message (300 bps and 1200 bps), 16 Kbps (FM/FSK) and voice (FM) traffic in the UHF frequency range (225 to 400 MHz). Power output is 35 watts in SAT mode and 2 watts in LOS mode. It will be employed at the Force Reconnaissance Company, to provide burst data (DCT) communications between remote, highly-mobile units and higher headquarters. It has a virtually unlimited range.

AN/TSC-85A SATELLITE COMMUNICATIONS TERMINAL

The AN/TSC-85A is a nodal or point-to-point trunking terminal. It is capable of transmitting a single, multiplexed, high-data-rate carrier (6, 12, 24, or 48 channels) and receiving one to four independent carrier frequencies (6, 12 or 24 channels). The transmission rate per channel is 48 Kbps PCM. The AN/TSC-85A hub terminal can simultaneously communicate with up to four AN/TSC-93A spoke terminals. In addition to the multichannel mode, the AN/TSC-85A also provides an orderwire (on-line and off-line) and a single-channel, secure voice, transmission mode. In the secure-voice mode, all other modes are inhibited, permitting transmission and reception of a single, 16 Kbps, digitized voice channel. It incorporates an 8-foot-diameter, ground-mounted antenna.

AN/TSC-93A SATELLITE COMMUNICATION TERMINAL

The AN/TSC-93A is a non-nodal or point-to-point terminal capable of transmitting and receiving 6/12/24 PCM channels on a single carrier. The transmission rate per channel is 48 Kbps. In addition to the multichannel mode, the AN/TSC-93A also provides an orderwire (off-line and on-line) and a single-channel, secure-voice transmission mode. In the secure-voice mode, all other modes are inhibited, permitting transmission and reception of a single, 16 Kbps, digitized-voice channel. It incorporates an 8-foot-diameter, ground mounted antenna.

AN/TSC-96(V) SATELLITE COMMUNICATIONS CENTRAL

The AN/TSC-96 consists of the OZ-46/TSC-96(V) and OL-188(V)/TSC-96(V). The OZ-46/TSC-96(V) Radio Set Group is the Landing Force Transmit and Receive Subsystem (LFTARS) terminal of the FLTSATCOM system. It consists of three UHF satellite transceivers, an antenna system, line interface units, and ancillary equipment, housed in an S-250 shelter. Each transceiver provides half-duplex, satellite, radio channels for voice, data, and TTY. The OZ-46/TSC-96(V) can be remoted from the OL-188(V)/TSC-96(V) Data Processing Group up to 250 feet by cable. The OL-188(V)/TSC-96(V) is housed in an S-280 shelter. It contains the voice, data, TTY and COMSEC equipments to terminate the Fleet Broadcast Channel (1200 bps), to enter the FLTSATCOM secure-voice network (2400 bps), and to become a CUDIXS subscriber. Through use of the NAVCOMSTA switch, entry can be obtained to the AUTOSEVOCOM system. The CV-3333/U Audio Digital Converter (and encryption device) can be remoted from the OL-188(V)/TSC-96(V) up to 500 feet (using an external power source).

AN/VSC-7 VEHICULAR MOUNTED SATCOM TERMINAL

The AN/VSC-7 is tactical, vehicular, single-channel, UHF, satellite termina which permits half-duplex, burst communications. It uses the AFSATCOM Transponder of FLTSATCOM and is operated with the AN/PSC-3 manpack SATCOM ter minal in net configurations. The AN/VSC-7 is mounted in a dedicated HMMWV an can act as net control station for up to 15 AN/PSC-3 manpack satellit communications terminals.

SINGLE-CHANNEL OBJECTIVE TACTICAL TERMINAL (SCOTT)

SCOTT is a tactical, single-channel, shelterized, EHF, satellite system with demand-assigned multiple-access (DAMA) capability. It will replace or augmen existing SATCOM and conventional terrestrial terminals in the 1990's.

INTERFACE EQUIPMENT

AN/GRA-6 RADIO SET CONTROL

The AN/GRA-6 provides remote-control functions for operating an HF radio set (of the push-to-talk variety), using one or two receivers, transmitters, amplifiers and other ancillary equipment. It allows remote operation from a distance of two miles over WD-1/TT wire. Signals include voice and 20-Hz, hand-cranked, ringing voltage. Switching permits local selection of duplex telephone operation or push-to-talk operation. The remote control voltage ranges from 24 to 45 VDC. The line impedance is 600 ohms balanced for transmit and 600 ohms balanced or unbalanced for receive. A bell or neon lamp provides received-signal indication. The AN/GRA-6 is no longer in the active forces. Some units are in use in the Marine Corps Reserve with AN/TRC-75, AN/MRC-83 and AN/MRC-87 radio sets.

AN/GRA-39A and 39B RADIO SET CONTROL GROUP

The AN/GRA-39A and 39B provide remote operation for UHF, VHF and HF radios, up to a distance of two miles. The AN/GRA-39A and 39B differ from the AN/GRA-39 in that a "call lamp" has been added to the front panels of the local and remote-control units. The AN/GRA-39B differs from the AN/GRA-39A in that the filtering has been improved for RF protection. The tone-generator frequency is 3900 Hz.

BASIC NET RADIO INTERFACE DEVICE (BNRID) C-6709/G

The C-6709/G provides a net radio interface (NRI) capability with existing 4-wire switchboards, SB-3614( )/TT and AN/TTC-38. The C-6709/G is connected to a switchboard, allowing any subscriber in a telephone system to access the trunk line to a particular radio set and control the push-to-talk operation of the radio. Conversely, a net radio user in the field can establish voice contact with the switchboard operator and place a call into the switched system. The C-6709/G operates in one of the following four operator-selectable modes: manual control by the switchboard operator; single-frequency (push-to-talk) procedures; dual-tone multi-frequency (DTMF) procedures; or automatic voice actuation.

HYX-57/TSEC WIRELINE ADAPTER

The HYX-57/TSEC is a tactical, portable/manpack, wireline, interface device. It is capable of interfacing the outputs of NESTOR units (operating at 18.75 Kbps), VINSON units (operating at 16 Kbps, data) and PARKHILL units (analog output) to a wireline. Modes of operation include 2-wire baseband and 4-wire diphase. The front panel contains a handset connector, a radio/crypto connector, and 4 binding posts for wireline connections.

FIBER OPTIC CABLE SYSTEM (FOCS)

The fiber optic cable system (FOCS) provides a full-duplex link between unit level circuit switches (ULCSs) and associated equipment. It is being designed to operate unrepeated over distances of 6 kilometers at rates from 72 kbps to 2.304 Mbps without adjustments. The following links will be provided by the FOCS:

AN/TTC-42 to AN/TTC-42
AN/TTC-42 to SB-3865
SB-3865 to SB-3865
AN/TTC-42 to AN/TRC-170
AN/TTC-42 to Remote Multiplex Combiner (RMC) TD-1234
SB-3865 to Remote Multiplex Combiner (RMC) TD-1234
AN/TRC-170 to Remote Multiplex Combiner (RMC) TD-1234
Digital Data Modem MD-1026 to MD-1026
AN/GRC-201 to AN/TTC-42
AN/GRC-201 to SB-3865

The components of the FOCS include the fiber optic applique (FOA) and terminals, the fiber optic cable assemblies (FOCA), the fiber optic test set (FTS), splice and repair kits, and interconnecting cables. Nominal 110 volt AC (50/60 Hz) or 28 volt DC power must be supplied to the FOA. No modification to the supported equipment is required. The FOA will connect at each end of the transmission link to the UG-1837 type connector at the cable entrance panel of the supported equipment. A separate eight-foot length of CX-11230 cable with connectors will be provided for use between the FOA and the supported equipment. One end of the CX-11230 cable shall be terminated in a UG-1870 type connector for mating with the supported equipment and the other end shall be terminated with a UG-1870 type connector for mating with the 1837 type connector that is an integral part of the FOA.

MARINE CORPS FIBER OPTIC MULTIPLEX SYSTEM (MFOMS)

The MFOMS is intended to replace the 26-pair cables CX-4566 in many applications. It is designed to operate over a distance of at least 2 kilometers and will interface both electrically and mechanically at each end of the transmission link to the UG-1837 type connector at the cable entrance panel of the supported equipment. It exploits the advantages of fiber optics to reduce the volume and weight ordinarily associated with metallic conductors. Furthermore, the MFOMS allows extension of the deployment range as well as providing electromagnetic interference (EMI) and radio frequency interference (RFI) immunity.

COMSEC DEVICES

HGX-82/TSEC LINK KEY GENERATOR (LKG) CONTROL UNIT

The HGX-82/TSEC provides command/status message-formatting and framing, key transfer, clock-generation, fill-device interfacing and power-distribution for up to eight TSEC/KG-82s.

HGX-83/TSEC AUTOMATIC KEY DISTRIBUTION CENTER (AKDC)

The HGX-83/TSEC is an automatic key distribution and storage center used in the AN/TTC-39 and AN/TYC-39. It is also capable of automatic recycling of terminal equipment. The HGX-83/TSEC is not in the Marine Corps inventory but is used by the U.S. Army.

KGX-93/TSEC

The KGX-93/TSEC provides automatic key distribution, key-variable generation, COMSEC clock-generation and distribution, AN/TTC-42 interface and common support functions for up to eight TSEC/KG-82s.

TSEC/KG-13 KEY GENERATOR

The TSEC/KG-13 is a full-duplex, digital, electronic, key generator used in the AN/TYC-5A Data Communications Terminal and the Ground Mobile Forces Satellite Programs.

TSEC/KG-14 KEY GENERATOR

The TSEC/KG-14 is an accessory key generator used in conjunction with the TSEC/KW-37 in the Ground Mobile Forces Satellite Program.

TSEC/KG-22 KEY GENERATOR

The TSEC/KG-22 is an accessory key generator used by the U.S. Navy on Link-11 NTDS/ATDS.

TSEC/KG-27 KEY GENERATOR

The TSEC/KG-27 is an electronic key generator used for bulk encryption in the AN/GRC-201 and the Ground Mobile Forces (GMF) Satellite Program.

TSEC/KG-30 KEY GENERATOR

The TSEC/KG-30 is a full-duplex, security device for use on point-to-point, netted and broadcast circuits. With appropriate ancillary equipment, it provides security for multichannel TTY, digital data, voice or facsimile signals.

TSEC/KG-36 KEY GENERATOR

The TSEC/KG-36 is a half-duplex, general-purpose, security device. It is used in the AN/TSC-96(V) Satellite Communications Central, in conjunction with the CV-3333/U Audio Digital Converter.

TSEC/KG-40 KEY GENERATOR

The TSEC/KG-40 is used in the NTDS/ATDS for encryption of data on the 2250-1364 Kbps, TADIL A link.

TSEC/KG-81 TRUNK ENCRYPTION DEVICE (TED)

The TSEC/KG-81 is a full-duplex, asynchronous, key generator capable of encrypting and decrypting digital data at rates up to 20 Mbps. The TSEC/KG-81 is not in use by the Marine Corps but is used by the U.S. Army.

TSEC/KG-82 LOOP KEY GENERATOR (LKG)

The TSEC/KG-82 is component of the AN/TTC-42 and provides full-duplex encryption/decryption of signaling and traffic received from a TSEC/KY-68, TSEC/-KG-82 or TSEC/KG-84A.

TSEC/KG-84A/84C DEDICATED LOOP ENCRYPTION DEVICE (DLED)

The TSEC/KG-84A/84C provide for encryption of TTY and data traffic on netted and point-to-point circuits, in addition to accessing TRI-TAC switches. They can operate full-duplex, simplex, transmit-only and receive-only. The TSEC/KG-84A/84C can be operated by local control or can be remotely controlled. They incorporate all necessary cryptographic electronics, including key generators, variable storage, variable processing/control, key-generation controls for transmit/receive, and clock and data recovery.

TSEC/KG-94A SEELEY TRUNK ENCRYPTION DEVICE (STED)

The TSEC/KG-94A will provide trunk encryption between 9.6 kbps and 13 mbps for the SB-3865. It is compatible and interoperable with the TSEC/KG-82 in the AN/TTC-42.

TSEC/KW-7

The TSEC/KW-7 is a half-duplex, on-line, asynchronous, security device for netted or point-to-point TTY terminals.

TSEC/KW-37

The TSEC/KW-37 is an electronic, broadcast, TTY, security device to be deployed in the Ground Mobile Forces (GMF) Satellite program.

TSEC/KW-46

The TSEC/KW-46 is a simplex, on-line, security device for Fleet Broadcast terminals. It comes in two versions: the KWT-46/TSEC for transmission and the KWR-46/TSEC for reception. Control for the TSEC/KW-46 is provided by the Communications Security System (CSS).

TSEC/KWX-7 REMOTE CONTROL UNIT

The TSEC/KWX-7 is the remote-control unit for the TSEC/KW-7. It permits remote operations of the TSEC/KW-7 (up to 500 feet) and provides for alarm and synchronization sequencing, as well as computer control and data interface.

TSEC/KY-8/28/38 NESTOR

The NESTOR family of half-duplex, wideband, speech-security equipment provides secure-voice communications for certain VHF/UHF radio networks and wireline. It converts analog input to a 3-digit, 8-level, PCM signal (at 18.75 Kbps). Output to associated radio equipment is provided as either conditioned base-band (FM radios) or conditioned diphase (AM radio) signals. NESTOR equipments are not compatible with SAVILLE (VINSON, BANCROFT) COMSEC Devices.

TSEC/KY-57, -58 VINSON SECURITY EQUIPMENT

The TSEC/KY-57 and TSEC/KY-58 are wideband, 16 Kbps, digital, voice/data, encryption appliques that provide security for certain UHF/VHF radio links. The TSEC/KY-57 is designed for manpack use, while the TSEC/KY-58 is used for airborne/fixed-plant applications. VINSON utilizes a CVSD voice processor and SAVILLE logic.

TSEC/KY-65, -75 PARKHILL NARROWBAND SECURITY EQUIPMENT

The TSEC/KY-65 and TSEC/KY-75 are narrowband, analog, voice-security devices which can be used with existing HF radios and wireline circuits. The TSEC/KY-65 is for manpack/vehicle use, while the TSEC/KY-75 is for remote aircraft/shipboard use.

TSEC/KY-67 BANCROFT

The BANCROFT is an integrated, 16 Kbps, VHF/FM, secure, digital, radio set designed for manpack/vehicular use. It operates on any of 1,840 channels with 25 KHz channel spacing, in the 30 to 76 MHz frequency range. The BANCROFT uses CVSD for analog-to-digital conversion and is compatible with SAVILLE (VINSON) secure voice radios. It has a range of 6 to 20 miles.

TSEC/KY-68, -78 DIGITAL SUBSCRIBER VOICE TERMINAL (DSVT)

The DSVT contains the audio-processing, signaling, and crypto functions necessary to provide secure and non-secure telephone and data access to the TRI-TAC family of digital circuit switches. It provides digital operation using CVSD processing at 16 or 32 Kbps, and can operate up to five miles from the switchboard. The modulation is conditioned diphase or baseband. The 4-wire, conditioned-diphase, loop interface consists of a transmit pair and a receive pair to carry digital signals and provide a dc phantom path for common battery power. The baseband loop interface consists of data transmit pair, a data receive-pair, and a clock-receive pair. The DSVT can be operated full-duplex or half-duplex. The handset includes a push-to-talk capability for half-duplex operation. The 16-key keyboard provides 0 through 9 digit keys, 4 precedence keys, a conference key, and an operator recall key. Visual indicators are provided on the DSVT for ring, busy signal and non-secure warning. The TSEC/KY-68 is ruggedized for use in a military field environment, while the TSEC/KY-78 is designed for use in a sheltered environment.

TSEC/KY-90 SECURE DIGITAL NET RADIO INTERFACE UNIT (SDNRIU)

The SDNRIU will provide the capability for single-channel radio subscribers to access the digital switching system. The SDNRIU is a secure, tactical, ruggedized, man-transportable, semiautomatic, half-duplex, interface unit. It operates between single-channel radios and subscribers of a switched system via 4-wire, digital loops from a digital circuit switch. The SDNRIU will accommodate a variety of single-channel radios and associated COMSEC equipments as subscribers to a TRI-TAC digital switch. The SDNRIU provides automatic control for channel-monitoring and receiver/transmitter-switching after manual call set-up. A manual override is provided to allow operator control, when required. The SDNRIU provides the capability for encryption and for limiting plain-text access to the called and calling parties when interfacing switched system subscriber. The SDNRIU is optimized for interconnecting a VINSON-secured (or VINSON-compatible), single-channel, radio user and a DSVT.

TSEC/KYV-2 and -2A SECURE VOICE MODULE

The TSEC/KYV-2 and -2A are COMSEC modules designed for use with the AN/PRC-68 radio to provide voice security. The TSEC/KYV-2 and -2A are fastened between the host radio and battery pack, connecting on either side through a 16-pin connector.

TSEC/KYV-5 VACTOR

The TSEC/KYV-5 is the COMSEC module for the ANDVT. It provides voice and data encryption for transmission over HF/VHF/UHF radio, wireline, or 2.4 Kbps digital transmission equipment.

ADVANCED NARROWBAND DIGITAL VOICE TERMINAL (ANDVT)

The ANDVT is a half-duplex, voice-security terminal for use over narrowband communication links. It is modular and has various configurations. The standard configuration includes: a basic terminal unit (BTU), which provides voice processing, coding and modulation functions; a remote control unit (RCU), which provides control of the operating mode; and a COMSEC module (CM) which provides encryption and decryption. The standard configuration will be used for applications requiring the secure transmission of voice, data and/or signalling information using HF/VHF/UHF radios, wireline, or 2.4 Kbps digital transmission equipment. The optional configuration includes a BTU and voice processor-only plug-in unit (VPU) (which provides a stand-alone processing function) or a BTU and modem-only plug-in unit (MPU) (which provides a stand-alone modem function). The BTU incorporates a tenth-order linear predictive coding (LPC) algorithm, and HF/LOS modems. The transmission rate is 2.4 Kbps and information data rates include: 300, 600, 1200 and 2400 bps serial data; 2.4 Kbps digital voice frames, and control signals (telephone numbers, classmarks and priority information). Four connectors on the BTU (ICOM, Radio, RCU and Power) are directly compatible with TSEC/KY-75 connectors; two connectors provide data and external modem capability, and two connectors (one red, one black) mate with the plug-in CM, VPU or MPU.

MARINE AIR COMMAND AND CONTROL SYSTEMS (MACCS)

AN/TYA-11 COMMUNICATIONS CENTRAL GROUP

The TYA-11 is a shelterized, transportable communications system which serves as the ground-air-ground link for the TAOC (AN/TYQ-2) of the MACCS. It incorporates the UHF AM/FM AN/GRC-171A(V)2 radio. The AN/TYA-11 is due to be replaced by the OE-33A/TRC.

OE-334/TRC AUXILIARY GROUND TRANSPORTABLE RADIO SHELTER

The OE-334/TRC is a transportable, radio communications system which will serve as the ground-to-air link for elements of the Marine Air Command and Control System (MACCS). It will be housed in a standard shelter and use off-the-shelf communications equipment. The nominal configuration will provide 4 HF, 3 VHF/FM, 2 VHF/AM and 6 UHF radio channels. It may be tailored for use in other communications applications within a Marine Air Ground Task Force. The OE-334/TRC eventually will replace the AN/TYA-11.

AN/TYA-12 COMMUNICATION GROUP

The AN/TYA-12 provides circuitry for several different categories of communications. A manual telephone switchboard and telephone terminal assemblies provide voice communications between any combination of internal or external communications media. A master intercommunication station is located adjacent to the switchboard at the operator's station with a communications status panel. Two radio sets (AN/GRC-112 and AN/GRC-134) with appropriate filters, antennas, and isolation and conversion modules provide some of the UHF radio links between the TAOC and other centers and aircraft.

AN/TYA-19 DATA COMMUNICATIONS GROUP

The AN/TYA-19 is housed in a transportable shelter and is a major unit of the Marine Air Command and Control System (MACCS) beach relay. It provides an HF radio link for data exchange between elements of the MACCS, the Naval Tactical Data System (NTDS), the Airborne Tactical Data System (ATDS), and other elements of the MACCS.

AN/TYQ-1 TACTICAL AIR COMMAND CENTRAL (TACC)

The AN/TYQ-1 is used in tactical air operations. It consists of one Operation Group (AN/TYA-1), one Planning Group (AN/TYA-3), one Communication Group (AN/TYA-16), and a Maintenance Facility Group (AN/TYA-28). It provides the tactical air commander with a computer support facility to assist him in the decision making process required to plan and direct the overall air battle. It also provides for communication with other systems, processing and correlation of data, and display of data on large and small-screen display units. The AN/TYQ-1 will be replaced by the Advanced Tactical Air Command Central (ATACC). Additional details concerning the AN/TYQ-1 are contained in section 304.5.

AN/TYQ-2 TACTICAL AIR OPERATIONS CENTRAL (TAOC)

The AN/TYQ-2 (TAOC) is the subordinate operational element of the Marine Air Command and Control System (MACCS) designed for control of enroute air-traffic and air-defense operations, including assigned manned-interceptors and surface-to-air missiles. It receives direct input from organic radar sensors and remote input from external air defense/air control agencies (via digital

data links). The AN/TYQ-2 detects, identifies and controls the intercept of hostile aircraft and provides navigational assistance to friendly aircraft in the accomplishment of support missions. Specific functions include the automatic detection, acquisition, and tracking of friendly and hostile aircraft by computer processing of radar inputs; computer-aided identification, classification and weapons assignment; computation of intercept parameters; transmission of intercept commands; and exchange of information to other systems by digital data links. The AN/TYQ-2 consists of six major groups: Central Computer Group, AN/TYA-5; Operations Group, AN/TYA-9; Communications Group, AN/TYA-12; 3D Radar Processor Group, AN/TYA-18; Unit Test Group, AN/TYA-23; and Maintenance Group, AN/TYA-27. The AN/TYQ-2 will be replaced by the AN/TYQ-23(V)1. Additional details concerning the AN/TYQ-2 are contained in section 304.6.

AN/TYQ-3A TACTICAL DATA COMMUNICATIONS CENTRAL (TDCC)

The AN/TYQ-3A provides tactical data and voice communication circuits for the AN/TYQ-1 Tactical Air Command Central or the AN/TYQ-2 Tactical Air Operations Central. It will be replaced by the AN/TYQ-23(V) in the TAOC application and by the ATACC in the TACC application. Additional details are contained in section 304.7.

AN/TYQ-23(V)1 TACTICAL AIR OPERATIONS MODULE (TAOM)

The TAOM is a transportable, modularized, software intensive, automated air command and control system. It is capable of controlling and coordinating the employment of a full range of air defense weapons--interceptors and surface-to-air missiles. It is a joint Marine Corps and Air Force developmental project with the Marine Corps acting as the lead Service. The AN/TYQ-23(V)1 will replace the AN/TQY-2 and AN/TYQ-3A. Operations modules (OMs) modified to satisfy Air Force requirements are designated as Modular Control Equipment (MCE).

The basic tactical air operations center (TAOC) element will be the OM. A single OM, housed in a standard 20 foot, ANSI ISO shelter, contains all mission essential equipment with the exception of search radars, IFF, and prime power requirements. All equipment required for operation of an OM, including radio antennas and signal and power cables and reels shall be transported inside the shelter. Radars, prime power sources, and air conditioners shall be transported separately. The OM is described in more detail in section 304.1.

ADVANCED TACTICAL AIR COMMAND CENTRAL (ATACC)

The ATACC is a C^2 system designed to meet the Marine Corps requirement for command and control of Marine aviation assets. It will provide man machine interfaces within the tactical air command center (TACC), and voice and digital information exchange interfaces between TACC operators and operators of interoperating systems and agencies. It will include the necessary displays, terminals, data recording, hard copy printout, telephones, radios, data link terminals, cryptographic equipment, and appropriate computer programs housed in four ISO shelters. Combined with generators and air conditioning units, the ATACC will provide for real-time/near real-time

monitoring of combat activities; coordinating the execution of the current air tasking order with higher, adjacent, and subordinate command and control activities; and planning future air operations through the integration of intelligence, MAGTF requirements, and aircraft availability information. The ATACC is described in more detail in section 304.2.

AN/UYQ-3A AIR-TRANSPORTABLE DIRECT AIR SUPPORT CENTRAL (DASC)

The AN/UYQ-3A is an air-transportable shelter equipped to enable assigned Marines to control and coordinate the employment of aircraft in the close support of ground combat forces. The DASC typically operates directly under the Tactical Air Command Center (TACC) or supplements the capabilities of the larger, fixed DASC in a MAW. Seven operators within the DASC have front-panel selection of voice radio communications in the VHF, UHF, and HF ranges. In addition, each operator can select intercommunications with the other operators or access external telephone communications. The AN/UYQ-3A is designed to operate from the bed of an M-923 truck, from within a suitably modified C-130 aircraft, or from a fixed, ground location.

AN/UYQ-4A DIRECT AIR SUPPORT CENTRAL (DASC)

The AN/UYQ-4A is a transportable, semiautomated, data-processing and display system. It is equipped to provide operational control and coordination of close air support and assault support operations of the MAW. It utilizes computer-driven displays which present a wide-range of information stored and updated by the computer. It rapidly processes fixed-wing and helicopter air support requests, via digital data links, and automatically presents a visual display to the operator--leading to more-rapid response and control of direct support aircraft missions during all weather and visibility conditions. The AN/UYQ-4A employs voice and teletypewriter communication with aircraft, field units, and other agencies. The Marine Corps purchased only 5 AN/UYQ-4A's in a limited edition, non-production version. Portions of these sets may be in use by the several Marine air support squadrons to provide all or part of their "fixed" DASC.

AN/TSQ-155(V) IMPROVED DIRECT AIR SUPPORT CENTRAL (IDASC)

The IDASC will replace the AN/TSQ-122. It will consist of an expandable 8'x8'x20' shelter containing communications control consoles, communication stations, display boards, and ancillary interface equipment for external communications. Additional details are contained in section 304.8.

COMPUTER EQUIPMENT

AN/AYK-14(V) GENERAL PURPOSE COMPUTER

The AN/AYK-14(V) is a general-purpose, 16-bit, digital computer which has been designated the Navy Standard Airborne Computer. It is modular in design and can be configured for variable applications. The basic system consists of an ATR enclosure configuration, plus separate operator and maintenance equipment. The largest ATR configuration consists of a central processor, 128K words of main memory (externally expandable to 512K words) and 5 I/O channels (externally expandable to 16).

AN/UYK-7(V) GENERAL PURPOSE COMPUTER

The AN/UYK-7(V) is a ruggedized, 32-bit, general-purpose computer which can be configured as a single processor or a multiprocessor system. The basic system consists of a single-cabinet configuration, plus a separate operator and maintenance panel. It includes a single processor, 48K-word memory and 16 full-duplex, input-output channels. An additional thirteen 16K-word memory modules can be added as external storage.

AN/UYK-20(V) GENERAL PURPOSE COMPUTER

The AN/UYK-20(V) is a militarized, 16-bit, general-purpose computer. It is configured as a rack-mountable module with an integral operator and maintenance panel. The AN/UYK-20(V) includes a central processor, main memory (expandable from 8K to 64K by increments), and 16 full-duplex, input-output channels.

AN/UYK-44(V) MILITARIZED RECONFIGURABLE PROCESSOR (MRP) AND MILITARIZED RECONFIGURABLE COMPUER (MRC)

The AN/UYK-44(V) is a 16 and 32 bit computer with a memory capacity that can be configured with 64K to 4M words. It can be configured with from 16 to 64 input-output channels. The AN/UYK-44(V) emulates the AN/UYK-20(V) and AN/UYK-20A(V) data processing sets and the AN/UYK-14(V) stand-alone computer functions.

The AN/UYK-44(V) MRP is designed for embedded applications in which a set of modules packaged in Navy standard electronic module (SEM) type hardware performs all functions specified for the AN/UYK-44(V) computer. In this form, the host provides the memory, power, cooling, and backpanel needed to operate the processor.

The AN/UYK-44(V) MRC is a stand-alone computer complete with the power, cooling, semiconductor and core memories, backpanels, cabling, connectors, and structure for the AN/UYK-44 to operate totally self-contained.

The AN/UYK-44(V) is used in the AN/MSC-63A Tactical Communication Center (TCC) and Special Security Communication Center (SSCC) and is planned for use in the upgrade of the AN/TYQ-19 Intelligence Analysis Center (IAC) and the AN/TSQ-129 Position Location Reporting System (PLRS) Master Stations. It is being used in the PLRS to be installed in LHD and other amphibious ships and in a wide range of other applications by the Navy including with the Integrated Tactical Amphibious Warfare Data System (ITAWDS) and the Navy Modular Automated Communications System (NAVMACS). The AN/UYK-44(V) is produced by IBM and Sperry-UNIVAC.

AIR TRAFFIC CONTROL EQUIPMENT

(The equipment included in this section is owned & supported by the Navy)

AN/TPN-22 RADAR SET

The AN/TPN-22 is an air navigational aid for the controlled approach and landing of aircraft in forward areas. It is a transportable, computerized, pencil-beam, three-dimensional, track-while-search radar system for use in execution of multi-mode, automatic, precision approach and landing recovery of tactical aircraft.

AN/TPN-30 TRANSMITTING SET, ATC

The AN/TPN-30 transmits angle/position information in azimuth, elevation and range (MIL-STD-291B format) to appropriately-equipped aircraft, to provide approach guidance under low-visibility conditions. It can be used as a complete, collocated station or as either the elevation or azimuth station of a split-site configuration.

AN/TRC-131A AIR TRAFFIC CONTROL (ATC) CENTRAL

The AN/TRC-131A ATC Central is an air-transportable tower with one controller position. It allows visual ground and air control over aircraft within a designated control zone. Visual control of ground vehicles is also provided. Control is accomplished through the use of radio communications and visual aids.

AN/TRN-29 TRANSPONDER SET

The AN/TRN-29 consists of two AN/TRN-14 Radio Sets, one AN/TRA-45 Test Monitor Control Unit, two air conditioners, and an AS-3184/URN Antenna. It is housed in an S-141 shelter. It will be replaced by the AN/TRN-44.

AN/TRN-30(V) RADIO BEACON SET

The AN/TRN-30(V) is a low-power, short-range, man-portable, direction-finding beacon which operates with battery or external power source. It can also be used as a medium to long-range, semi-permanent configuration, using a power source other than a battery.

AN/TRN-33 UHF BEACON SET

The AN/TRN-33 Radio Beacon Set is an air-transportable, short-range, navigational aid that transmits in the UHF frequency range. It provides bearing and identification information to appropriately-equipped aircraft. The AN/TRN-33 transmits International Morse Code-modulated continuous wave or voice-modulated signals. Automatic keying produces the International Morse Code that identifies the ground station housing the beacon system.

AN/TRN-44 TACAN

The AN/TRN-44 TACAN is an air-transportable, dual-channel, automatic-transfer TACAN. It provides range, bearing, and identification when interrogated by an aircraft. The effective range of coverage is 200 miles. It will replace the AN/TRN-29.

AN/TSQ-107 RADAR SURVEILLANCE CENTRAL

The AN/TSQ-107 is an air-transportable, surveillance radar containing the AN/UPS-1F Radar Set, a modified AN/TPX-42A(V)5 Interrogator Set, and two AN/UPX-23 IFF Interrogator Sets. The primary function of the AN/TSQ-107 is to detect and identify airborne targets and to relay this information to the AN/TSQ-131. The system enables detection and identification of airborne targets at ranges up to 250 miles. It will be replaced by the AN/TPS-XX.

AN/TSQ-120 AIR TRAFFIC CONTROL CENTRAL

The AN/TSQ-120 provides visual air traffic control over aircraft on the ground and in the air within a designated control zone where expeditionary air traffic control facilities are required. Control is accomplished through radio communications and NAVAID equipment. Approach control service is coordinated with remote facilities and agencies by use of telephone service and interfacility communications control. It can be employed autonomously or in conjunction with MATCS terminal landing facilities.

AN/TSQ-131(V) CONTROL AND COMMUNICATION SUBSYSTEM

The AN/TSQ-131(V) is an air-transportable facility which consists of two functionally-identical shelter groups which contain equipment to provide data processing, user interface/display functions, and communications functions. The shelters can operate separately, but with a reduced capability. The AN/TSQ-131(V) integrates the data received from the AN/TPS-XX (or AN/TSQ-107), the AN/TPN-22, and external communications agencies into a unified air traffic control system. The AN/TSQ-131(V) has eight controller positions which can control, manage and monitor approach/departure flight operations and precision approaches.

APPENDIX E

COMMUNICATIONS, NAVIGATION, IDENTIFICATION (CNI)

1. INTRODUCTION. The ability to distinguish between friend and foe and to determine the location of friends and foes alike is a fundamental requirement for effective C^2 systems. Traditional difficulties in CNI are compounded by the high mobility of air, ground, and naval forces in modern combat and the electronic warfare (EW) capabilities of modern armed forces. This appendix describes present and planned systems designed to assist commanders in meeting their CNI requirements.

Each of the CNI systems discussed in this appendix also has position location information (PLI) capabilities. It should be noted, that with increasing integration of CNI and PLI functions and systems, the operational difference between CNI and PLI is becoming increasingly difficult to distinguish.

2. Marine Corps Requirement. The Marine Corps requires CNI capabilities that are integrated with the other elements of landing force C^2 systems. The projected CNI mix within MAGTFs is based on the Position Location Reporting System (PLRS), anchored by the NAVSTAR Global Positioning System (GPS), and complemented by the time phased development of Joint Tactical Information Distribution System (JTIDS) terminals.

3. Combat Identification Systems (CIS). The Air Force, Navy and Army are developing CIS. CIS is a term to describe the complete range of IFF development work by the Services. CIS are a collection of identification techniques that will allow the Services to sort out targets and to improve and expand identification systems. Figure E-1 indicates the structure of CIS. It is broken down into three subordinate subsystems--noncooperative, indirect, and direct. The technologies, or equipment forms constituting each subsystem are indicated in figure E-1. The following paragraphs briefly describe each of the subsystems.

a. Non-Cooperative Systems. In these systems, sensors and special processing techniques will be used to obtain specific characteristics of an aircraft that identify it as friend or foe. Many complex concepts and techniques are being investigated to support this effort. For example, one area of investigation includes special techniques to measure rapidly, certain parameters of an unidentified aircraft, which are then processed to provide its shape. The shape data obtained is then compared to shape data stored in the system to determine the aircraft type. Another investigative area is the use of a special radar receiver and processor to identify modulations to radar returns caused by aircraft engines.

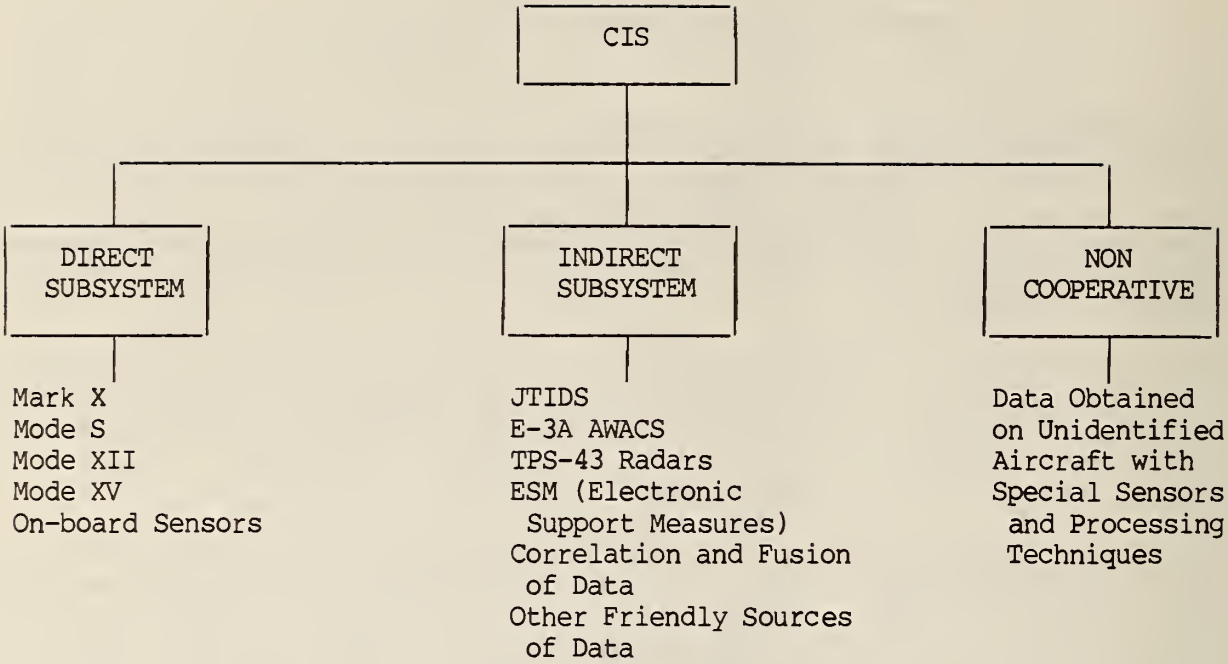

Figure E-1. U.S Combat Identification Systems

b. Indirect Methods. This method includes the identification of friendlies and hostiles by a third party, using all available data, from a variety of sources, about a given air situation. Two main developmental efforts for this area are being funded under the Combat Identification Systems-Indirect Subsystem (CIS-ISS) program operated by the Deputy Command for Tactical Systems, Electronic Systems Division of the Air Force Systems Command (AFSC), located at Hanscom AFB, Massachusetts. One program is to develop an automated process for correlating and fusing data from multiple sources to provide an unambiguous identification. Information for the processor would come from such diverse sources as the AN/TPS-43 Radars; E-3A AWACS; JTIDS; electronic warfare support measures (ESM) Systems; and the Mark X, Mark XII, and Mark XV identification friend or foe (IFF) systems, along with the days flight plans and information on safe corridors. The other program is to develop a tactical ESM sensor, slaved to a AN/TPS-43 radar, to serve as a high-quality source of aircraft identification information.

c. Direct Method. This method uses direct question and answer (Q&A) techniques by the platform IFF equipment. The next generation direct method subsystem of the CIS will be the Mark XV. The Mark XV is an Air Force led, tri-service program, managed by the Aeronautical Systems Division (ASD) Deputy for Aeronautical Equipment of the AFSC, located at Wright-Patterson AFB, Ohio. The Mark XV corrects deficiencies of the exiting systems (Mark X and XII) by incorporating a new secure IFF mode, the new civil air traffic control function, and the old IFF modes. The unit will have the following design feature:

- New electronically keyed cryptographic unit.
- Short code-validity intervals to counter exploitation.
- Spread-spectrum waveforms for jam resistance.
- Size compatible with the space allocated for the Mark XII.

The operational range of the Mark XV will be platform dependent, but equal to or greater than the weapon systems primary sensor range. The Mark XV program is in the demonstration/validation phase, with full-scale development planned for FY88 and production in FY96. The Mark XV will operate in the D band (1.0 to 2.0 GHz)

The direct subsystem IFF equipment currently in use is the Mark XII. This equipment can identify a friendly platform if the platforms IFF system is turned on and is working properly. Non-cooperative friendlies remain unidentified, as do foes. The Mark XII is an upgraded version of the Mark X. In 1959 the U.S. added cryptographic capabilities to the Mark X and changed its designation to Mark XII. Most of the NATO countries, and U.S. civil airlines still have and use Mark X equipment.

The direct subsystem will probably be the most complex of all the CIS subsystems. Present planning calls for the retention of the Mark XII (for "Backward" compatibility), a Mark X for operations with civil air traffic control (ATC) networks, and the Mode S discrete-address system which will eventually replace the Mark X in civil use.

4. CNI/PLI Systems. Concurrent with CIS development is the ongoing development and fielding of CNI and PLI systems. Figures E-2 lists the major CNI/PLI systems that fall under this heading. PLRS, GPS, and JTIDS will be complementary systems in meeting Marine Corps CNI requirements. These systems are technically described in earlier chapters of this plan.

TABLE E-1. CNI/PLI SYSTEMS

PLRS
GPS
JTIDS
RADARS
EPLRS
Manual Inputs

5. Future Integrated CNI Programs. These systems, either in the definition or developmental stage, deal with the avionics of the 1990's. They are Pave Pillar and the Integrated Communications, Navigation, Identification Avionics

(ICNIA) programs. Both programs are under the cognizance of the Air Force Wright Aeronautical Laboratories, Avionics Laboratory, located at Wright-Patterson AFB, Ohio.

a. Pave Pillar. This program is in the definition phase. The program objective is to develop a next generation system of avionics for the future single-seat aircraft. The definition phase is taking into account avionics functions such as navigation, guidance, weapons delivery, target acquisition and tracking, terrain following and avoidance, threat detection and classification, threat avoidance, and electronic jamming. Integration of requirements will be accomplished using common modules, fusion algorithms across sensor systems, and fault tolerant system architecture. New technologies being pursued in the Pave Pillar program include:

- Very high speed integrated circuits (VHSIC).
- Advanced systems development.
- Sensor developments.
- Voice command and control.
- Color graphic imagery.
- New algorithms.

Pave Pillar technology will be made available to Army and Navy aircraft development programs.

b. Integrated Communications, Navigation, Identification Avionics Program. ICNIA is a major sub-program of Pave Pillar. It will combine existing and planned near-term CNI functions in the 2 MHz to 2 GHz frequency domain into one airborne radio system. The system will incorporate VHSIC and radio frequency large scale integration (RFLSI) technologies, along with fault-tolerant architecture to combine the CNI functions presently implemented in 14 separate radios. An IOC of 1991-1992 is expected for ICNIA. ICNIA is a Army, Navy, Air Force joint program development.

While these programs are avionics in nature, the principles and technology associated with integration solutions could very well be applied to CNI/PLI integration for Marine Corps ground systems. Current separate CNI capabilities may be replaced by newer CNI equipment, which, in turn, may be replaced by an integrated communications navigation identification (ICNI) development.

A CNI capability will be fielded with PLRS and will be expanded with GPS and JTIDS by FY 94. At this point, an initial ICNI capability will exist to the extent that PLRS, GPS, and JTIDS provide a significant degree of improved capabilities, satisfying a multitude of CNI requirements merged into several common nets. From this point through the year 2000, RDT&E will have a firm ICNI base upon which to expand and explore new techniques to further integrate the CNI functions down to the lowest user levels.

6. Marine Corps CNI Systems

a. Planned Systems Distribution. The Marine Corps is procuring PLRS, GPS and JTIDS. A fourth system, the enhanced PLRS, being developed by the Army, is being monitored. Table 3-3 in chapter III indicates the specific breakdown of the number of PLRS units to be distributed within a Marine Division. Table E-2 indicates the JTIDS module (JM)/JTIDS terminal allocation to Marine Corps operational units. The JTIDS terminals will be housed in a separate JTIDS module (JM) and connected either to the TAOC or TACC by a fiber optic cable. Proposed Marine Corps distribution of NAVSTAR GPS is described in section 404.2 of this plan.

b. System Status. Starting with the late 1980's, the first generation of "new technology" CNI systems will begin to be introduced into Marine Corps operating forces. The presently expected fielding dates for the CNI system are:

- PLRS: 1987 through 1991
- NAVSTAR GPS: 1988 through 1991
- JTIDS: 1994 through TBD

TABLE E-2. JM/TERMINAL ALLOCATIONS

TAOC			16/16
	MACS 1	2/2	
	MACS 2	2/2	
	MACS 4	2/2	
	MACS 5	2/2	
	MACS 6	2/2	
	MACS 7	2/2	
	4TH MAW	4/4	
TACC			8/8
	1ST MAW	2/2	
	2ND MAW	2/2	
	3RD MAW	2/2	
	4TH MAW	2/2	
SUPPORT UNITS			4/10 (6/4*)
	MCCES	2/4	
	MCTSSA	2/4 (2/2*)	
	Terminal SSA	0/1*	*FSD
TERMINAL			
	JTC3A	0/1*	**FSD JM
SPARES			2/6

TOTALS: TERMINAL = 40 (36 Production + 4 full scale development (FSD) model)
JMs = 30 (29 Production + 1 FSD model)

7. Position Location Information (PLI) System Integration. Marine Corps real-time systems; e.g., MIFASS, TAOM, and TCO; require the exchange of large quantities of PLI messages (PLIMs). Projections indicate that the preponderance of TDS data communications, well in excess of 90%, will be composed of PLIMS, constituting a significant portion of the communications load on a tactical communication system. The PLIMs are important and time critical to Marine Corps C^2 systems. The supporting communication systems must be sized proportionately to allow these messages to reach their destination without delay or message error.

Satisfactory functioning of the MIFASS and TCO is critically dependent upon the ability of the communication system to satisfy their internodal, real-time digital data message transfer requirements, including those for transfer of PLI. This communication capability can be provided best through a comprehensive multichannel transmission system and associated Unit Level Message Switch (ULMS) network. However, when a multichannel switched system is not available, alternative concepts of operations must be provided for.

8. PLI Sources. PLI is basically obtained from four sources: PLRS, radars, manual inputs, and inputs derived from external sources.

a. PLRS. A general concept of employment for PLRS is contained in Chapter II, Section 204 of this plan. PLRS will provide periodically updated position reports for each of its user units (UUs) interacting with associated master stations (MSs). Transmission of the PLIMS from the MS (or the alternative MS (AMS)) to the appropriate MIFASS supported center performing position location information processing (PLIP) functions will be by cable or wideband single-channel (WBSC) radio. Individual user unit-equipped elements transitting PLRS MS areas of responsibility are automatically passed from one PLRS community to another.

b. Radar. PLI on aircraft flying within the MAF area of responsibility is provided by both organic and external radars. Radars operate in a continuous 360 degree scan (search) mode, providing a new update on each aircraft visible to the radar once per scan period. Air defense radars, organic to the Marine aircraft wing (MAW), have scan periods of ten or five seconds, with ten seconds the usual mode of operation. PLI generated by TAOC radars includes positions of both friendly and enemy aircraft.

c. Manual Input. Manual PLI inputs comprise reports from sources other than PLRS, GPS, JTIDS, or radars. Typically, they are transmitted by Digital Communications Terminal (DCT) or voice via net radio. Manual PLI reports are usually produced from observations of terrain features by reference to maps. They are provided at irregular intervals, and the amount of digital traffic resulting from manual PLI inputs will be negligible in comparison to other types of PLI traffic.

d. External Sources/Systems. When available, PLI for aircraft and friendly units from other Services and systems, such as EPLRS and the Army Maneuver Control System (MCS) will be inputed into the MAGTF senior ground element combat operations center (COC) and at the TAOC.

9. Processing and Correlation of PLI. For maximum effectiveness, the raw output from PLI sources must be processed prior to distribution to the using TDS-equipped centers. This processing is done at MIFASS-equipped centers with PLIP capabilities, and at the TAOC. The PLIP is a MIFASS software capability that will be included in the MIFASS suites of units to which PLRS MSs or AMSs are assigned. There are three principal types of processing: track correlation, distribution filtering, and prediction filtering.

a. Track Correlation. There is a strong probability that the same aircraft will be tracked by more than one radar. For aircraft equipped with PLRS there is also a significant probability of duplication between PLRS and radar tracks. Tracks must, therefore, be correlated, and in the event of duplicate tracks a choice has to be made as to which track is likely to be the most accurate.

The correlation of aircraft tracks between radars and PLRS presents some special problems in track data transmission. In general, the PLRS track is expected to be more accurate than a radar track. This will not always be the case, and it is desired to have the flexibility of shifting between data sources as conditions change, or as the sources become unavailable. Whenever one data source is determined to be superior for a given track, transmission of that track from any other source should be inhibited between the TAOC and the PLIP, in either direction. It may also be necessary to resume transmission of track data from the alternate source at any time.

b. Distribution Filtering. PLI distribution potentially allows any center access to any, or all, tracks held within the MAF. This desirable feature introduces the question of how to determine what set of tracks to send to each center. Most centers do not need, and may not be capable of handing, all tracks available. The solution chosen for MIFASS and TCO is to let each using center determine its own track requirements, and to transmit its requirements to a PLI distribution center by means of a "track descriptor" (TD) message. Changes to the requirements are implemented by transmission of subsequent TD messages. The TD format provides means for specifying track requirements in terms of geographical location, sensor type, track type, unit size, and military identification making it possible to request any desired subset of the total master track file.

c. Prediction Filtering. The third processing function is the reduction of track update rates for cases in which the tracked unit is behaving predictably, including the case of no movement. A track prediction algorithm is to be implemented both as part of the PLIP and at using MIFASS/TCO-equipped centers. As long as a tracked-unit's observed position updates correspond within established limits to the predicted positions, the PLIP will inhibit output of PLIMs for that track. The net effect is a reduction in PLIM rates for tracks exhibiting slow movement. This also eliminates PLIMs on stationary tracks. A minimum track update rate of one update every 90 seconds for MIFASS is a specified imposition. As currently specified, the TAOM does not include prediction filtering.

10. PLI Requirements for TDS-Equipped Centers

a. MIFASS. While MIFASS-equipped centers have requirements for ground, surface (ship), and air track PLI, each center is able to establish and revise its track requirements at the centers discretion. The anticipated operation for each center allows track estimates to be made corresponding to a possible hyperactive air situation. Estimated track requirements for MIFASS-equipped centers are:

MAF FSCC:	All tracks.
DIV FSCC:	All tracks.
On-line INF REGT FSCC:	All air tracks (friendly and hostile). All subordinate ground units. 1/3 of reserve INF REGT ground units. 1/3 of other adjacent on-line INF REGT ground units. Assigned NGF ships.
Reserve INF REGT FSCC:	All air tracks. All subordinate ground units. 1/3 of other on-line INF REGT ground units.
INF BN FSCC:	All DAS air tracks in parent REGT's AOR. All ground tracks in BN AOR and adjacent INF BN AORs. Half of hostile air tracks in the MAF AOR. Assigned D/S and parent REGT G/S NGF ships.
ARTY REGT FDC:	All tracks.
ARTY BN FDC:	Same tracks as associated INF REGT FASC.

b. TCO. The track requirements for the TCO equipped centers are included in the collocated MIFASS equipped center track requirements. The TCO should have direct access to its collocated MIFASS for track requirements.

The TACC will have substantial PLI requirements, but will not have a collocated MIFASS-equipped center. The TACC will have to include its own track files, and must request PLIM transmission from the division FSCC PLIP or the TAOC, as appropriate. The TACC will require tracks on all aircraft and on ground units down to company level. It is not desirable to require the TACC to duplicate the air track correlation function done by the TAOC and Division FSCC. The currently preferred procedure is to have the TACC receive all correlated air tracks from the TAOC/MIFASS-equipped DASC, and receive ground tracks only from the PLIP. The TACC will also receive track data from TCO/TIMs via MTS messages.

TCO-equipped centers may also be located at MAG and squadron operations centers. However, these centers will not require track data.

c. TAOC. The TAOC serves as the air track management facility, and requires the best available track information on all ships, aircraft, and missiles within its sector of responsibility. Track data on mobile ground

units is not required. The majority of track data used will be provided from organic and external radars. Some track data will come from aircraft equipped with PLRS. PLRS track data usually will be superior to that from organic and external radars associated with the TAOC. Current plans call for PLRS UUs to be installed in all helicopters and observation aircraft, and on some additional close air support aircraft, primarily the AV-8.

The TAOC has a large track-file capacity, in addition to position information storage for a number of non-moving points. A message rate, based on updating of these air tracks, can be considered the upper limit on PLI from the TAOC, but does not take into account the possible redundant reporting from multiple sensors, relay of non-filed track data, and reception of track data which is immediately discarded. The planned use of dedicated links to each PLI source will eliminate the possibility of track redundancy over any given link (or set of parallel links) to a single source. For a given radar scan rate, the limiting factor on the average update message rate over a dedicated link from a single radar is the number of air targets within the radar's field of view. The organic radars to be used in the tactical air defense role have a radius of coverage of 300 miles or less, while the TAOC display covers an area approximately 1,000 x 1,000 miles. It is unlikely that one radar would ever provide simultaneous updates on the entire TAOM file capacity.

The TAOC also provides air track data to several other users. Track data is provided to missile battery assault fire units (AFUs), and to Marine air traffic control squadrons (MATCSs). The transmission of PLIMs to the division FSCC and to the TACC has already been discussed. Each AFU requires track information on all aircraft and missiles within its assigned sector, or that are likely to enter the sector. As many as nine AFUs may operate with a MAF.

Air track information required by MATCS detachments to perform their assigned functions will normally be obtained from the MATCS's organic air traffic control surveillance radar. Under certain conditions, such as EMCON or deployment of the AN/TPN-22 precision radar without a surveillance radar, track data will be obtained via TADIL B from the TAOC. Normally the requirement for transfer of track data between TAOC and the MATCS would be limited to the short period preceding a handover of aircraft control.

The TAOC is also required to exchange track data with varying combinations of external C^2 systems. As presently planned, these include the following:

AGENCY	SYSTEM	EQUIPMENT	PROTOCOL
Army	AADCP	AN/TSQ-73	TADIL B
Air Force	CRC/CRP	AN/TSQ-91	TADIL A, B
Air Force	AWACS	E-3A	TADIL A
Navy	NTDS/ATDS		TADIL A
NATO (Present)	NADGE		Link 1
NATO (Future)	ACCS	TBD	TBD

Data exchanges will be accomplished by one of several types of dedicated links. A summary of TAOC requirements for PLI exchange is as follows:

TACC:	Receives all active correlated air tracks from TAOC.
MIFASS:	TAOC transmits radar tracks of aircraft to the senior GCE FSCC and receives PLRS tracks of aircraft from that FSCC (MIFASS-PLIP).
AFU:	TAOC transmits all air tracks within assigned sector, or projected to enter assigned sector, to each AFU.
MATCS:	Tracks on all aircraft entering controlled airspace (5 to 80 nautical mile radius, as assigned), transmitted from TAOC when not provided by organic radar; tracks on controlled aircraft at time of handover.
EXTERNAL AGENCIES:	Receive tracks on surface ships from NTDS, exchange air track data with other services and NATO forces as required.

11. Current Capabilities. Current techniques, equipment and capabilities used by the Marine Corps for CNI/PLI, and the projected replacement in the 1990's are contained in the following list. The list is organized by ground and air capabilities.

GROUND CAPABILITIES

TECHNIQUE, EQUIPMENT OR SYSTEM	1991 REQUIREMENT FORECAST
(1) Conventional survey	• Required for many engineering applications; replaced by GPS for general weapons siting.
(2) Dead reckoning POS/ NAV by map and compass	• Requirement remains, although capability greatly improved by PLRS and GPS. Compass required to navigate efficiently from PLRS or GPS output data.
(3) Loran - C	• Replaced by GPS and PLRS.
(4) Position and Azimuth Determining System (PADS)	• Requirement remains; augmented by GPS and PLRS.

AIR CAPABILITIES

TECHNIQUE, EQUIPMENT OR SYSTEM	PROJECTED REPLACEMENT
(1) TACAN	• Replaced by GPS and PLRS. Possible integration with ICNIA program.
• AN/ARN-84 TACAN Navigational Set. Airborne interrogator-responder which enables the aircraft pilot to continuously obtain his bearing and distance from a land based bearing for navigational purposes. The unit also provides bilateral air-to-air slant range indication with a similar equipped aircraft and air-to-air bearing. Transmitter frequency is in the 1025 to 1100 MHz range, with 126 channels possible. Power output is 1KW nominal, with 4KW at maximum. Receive frequency is in the 962 to 1213 MHz range and also has 126 channels possible.	
• AN/ARN-52 TACAN Navigational Set. Usually installed in aircraft or helicopters to provide bearing, distance, and tone identity information to indicate the location of complementary ground station. Also provides range information between aircraft when used with an aircraft having an AN/ARN-52(F) TACAN. Equipment contains 126 crystal-controlled frequency channels, with one crystal per channel. The range associated is 300 miles	
• Others	
(2) OMNI-ADF • AN/ADF-50 • Other	• Replaced by GPS and PLRS. Possible integration with ICNIA program.
(3) Dead reckoning navigation by magnetic heading reference.	• Requirement remains as backup to PLRS, GPS, and JTIDS. Possible integration with ICNIA program.
(4) Instrument Landing System (ILS) and Automatic Carrier Landing System (ACLS) o AN/ARA-63 o AN/SPN-41 o AN/APN-154 o Others	• Partial replacement by GPS and JTIDS
(5) Shipboard and ground based radar tracking	• Partial replacement by GPS, JTIDS and PLRS capabilities.

(6)	IFF interrogate & transpond	• Requirement remains; augmented by JTIDS and PLRS. Possible use of CIS program development features.

- AN/APX-72
  Transponder Set This unit is a lightweight air-borne IFF transponder set designed to provide auto-matic identification, identification of position, emergency signal and altitude reporting, by replying to all suitably equipped interrogating facilities. The unit receives, decodes, and replies to the characteristic interrogation of modes 1, 2, 3A, C, and mode 4. The transmitter output field is 1090 MHz while the receive frequency is 1030 MHz.

- AN/APX-76
  Interrogation Set This unit, in conjunction with the aircraft's surveillance radar system and a mode 4 computer, provides modes 1, 2, 3/A and 4 IFF capabilities. The unit incorporates side lobe suppression to provide a narrow effective beamwidth and includes self-checking performance monitor and fault isolation circuits.

- AN/UPX-27.

(7)	Radar altimeter • AN/APN-194 • Other	• Requirement remains.
(8)	Attitude and Heading Reference Set (AHRS) • AN/ASN-92 • Others	• Requirement remains as backup to more accurate GPS in EW environment. Possible integration with ICNIA program.
(9)	Inertial Navigation System • AN/ASN-92	• Requirement remains for a ICNIA self-contained POS/NAV system that does not rely on external reference. Possible integration with ICNIA program.
(10)	Marine Remote Area Approach and Landing System (MRAALS)	• May be replaced by GPS.
(11)	Course Directing Radar • AN/TPB-1D	• Replaced by MTACCS systems supported by GPS sensor data.
(12)	Doppler Navigation Set (LDNS)	• Requirement remains. Possible integration with ICNIA program.
(13)	Voice and data communications • AN/ARC-51 & 159	• Requirement remains; augmented by JTIDS and PLRS.

APPENDIX F

REFERENCES

A. SYSTEMS ACQUISITION

DoD Directive 5000.1	Major System Acquisitions, 12 March 1986.
DoD Instruction 5000.2	Major System Acquisition Procedures, 12 March 1986.
SECNAVINST 5000.1B	System Acquisition.
SECNAVINST 5231.1B	Life Cycle Management (LCM) Policy and Approval Requirements for Information Systems (IS) Projects.
MCO 3900.4C	Marine Corps Program Initiation and Operational Requirement Documents.
MCO P5000.10A	Systems Acquisition Management Manual.
MCO 5000.15	Marine Corps Systems Acquisition Management Policy.

B. RESEARCH, DEVELOPMENT, TEST, AND EVALUATION

DoD Directive 5000.3	Test and Evaluation 12 March 1986.
OPNAVINST 3960.10B	Test and Evaluation.
MCO 3900.3D	Marine Corps Research, Development, Test, and Evaluation.
MCO 3900.11C	Marine Corps Research, Development, Test and Evaluation (RDT&E) Work Directives.
MCO 3900.12A	Marine Corps Exploratory Development Program.
MCO 3960.2	Marine Corps Operational Test and Evaluation Activity (MCOTEA); Establishment of
MCO 5000.11A	Testing and Evaluation of Systems and Equipment for the Marine Corps.

C. INTEROPERABILITY

DoD Directive 4630.5	Compatibility and Interoperability of Tactical Command, Control, Communications, and Intelligence Systems, 9 October 1985.
DoD Directive 5154.28	Joint Tactical Command, Control, and Communications Agency (JTC^{3}A), 5 Jul 84.
JCS Pub 10	Tactical Command, Control and Communications Systems Standards, 1 Dec 1982, Volume I - JTAO Message Standards.
JCS Pub 12	Tactical Command and Control Planning Guidance and Procedures for Joint Operations, Volume I, Information Exchange Planning Guidance, April 1974.
JCS MOP 160	Compatibility and Interoperability of Tactical Command, Control, Communications, and Intelligence Systems, 7 January 1986.
MCO 3093.1A	Intraoperability and Interoperability of Marine Corps Tactical Data Systems (TDSs) and Interconnecting Equipment.
CMC Ltr 3510/2 CCA-11, 21 Dec 84	Technical Interface Concepts for Marine Tactical Systems.
CMC Ltr 3510/2 CCA-11, 30 Sep 85	Marine Corps Interoperability Configuration Management Plan (Short Title MCICMP).
CMC Ltr 3510/2 CCA-10,5 Mar 87	Marine Corps Interoperability Management Plan (Short Title IMP).
. . . . .	Technical Interface Design Plan for Tactical Systems, Volume V, Protocol Standards, Draft, August 1986.

D. OTHER

JCS Pub 1	Dictionary of Military and Associated Terms, 1 April 1984.

Federal Standard 1037	Glossary of Telecommunication Terms, July 1980.
MCO 4105.1A	Weapon System/Equipment Support Management within The Marine Corps.
TM-2000-15/2	Principal Technical Characteristics of U.S. Marine Corps Communication-Electronic Equipment, 30 June 1983.
MMROP	Marine Corps Mid-Range Objectives Plan for Fiscal Years 1986-1995 (MMROP, FY86-95) (U), Secret.
MCMIP	FY 1987 Marine Corps Master Intelligence Plan (U), CMC ltr 3800, 3977B/INT, 7 Nov 1986, Secret.
MLRP	Marine Corps Long Range Plan (MLRP), MARCORPS-2000 (U), May 1982, Secret.
Appendix A-MLRP	Science and Technology Objectives, Appendix A to the Marine Corps Long Range Plan (U), June 1982, Secret.
ABIC	Army Battlefield Interface Concept (ABIC) 83, Corps and Below (U) March 1984, Confidential.

☆U.S. GOVERNMENT PRINTING OFFICE: 1988-541-931/ REGION NO. 4

THIRD CLASS

MAGAZINE TITLE

DATE OF MAGAZINE	BORROWER'S NAME	TIME DUE
AUG 0 5 1996	MAR	2 6 2006
[illegible] 1998	APR	– 5 2006
MAY 0 3 '99		
MAR 2 5 2006		
[redacted]		
MAR 2 6 2006		

FEB 0 4 1998

DIRECTOR MARINE CORPS RESEARCH CENTER
ATTN COLLECTION MANAGEMENT (C40RCL)
MCCDC
2040 BROADWAY ST
QUANTICO VA 22134-5107